Networks and Protocols

EE 122: Intro to Communication Networks

Fall 2006 (MW 4-5:30 in Donner 155)

Vern Paxson

TAs: Dilip Antony Joseph and Sukun Kim

http://inst.eecs.berkeley.edu/~ee122/

Materials with thanks to Jennifer Rexford, Ion Stoica, and colleagues at Princeton and UC Berkeley

1

Some Questions & Answers

- Q: Will there be reserved Lab times?
  A: We asked for these, but the scheduling folks are resisting.
- Q: Can we do the projects in groups?
  A: The first two projects are to be done individually. We haven't yet decided about the third project.
- Q: What about the scheduling conflict with the finals for CS 162 and CS 194?
  A: The instructors are aware of these and are trying to work out a general solution. If need be, we will have an alternative time for those students.

2

Goals for Today's Class

- Type of Networks
  - And the key concept of **multiplexing**
- What's a **Protocol**?
- Clients & Servers & Peer-to-Peer (time permitting)

3

Taxonomy of Communication Networks

- Communication networks can be classified based on the way in which the nodes exchange information:

Communication
Network

4

Taxonomy of Communication Networks

- Communication networks can be classified based on the way in which the nodes exchange information:

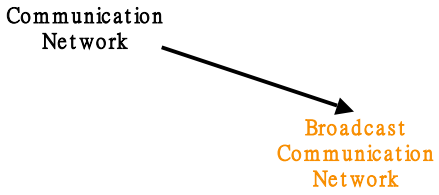

5

Broadcast Communication Networks

- Information transmitted by any node is received by every other node in the network
  - Examples?
  - Usually in LANs (*Local Area* Networks)
    - E.g., Ethernet, WiFi
    - E.g., lecture!
- What problems does this raise?
- Problem #1: limited range.
- Problem #2: coordinating access to the shared communication medium (*Multiple Access Problem*)

6

Taxonomy of Communication Networks

- Communication networks can be classified based on the way in which the nodes exchange information:

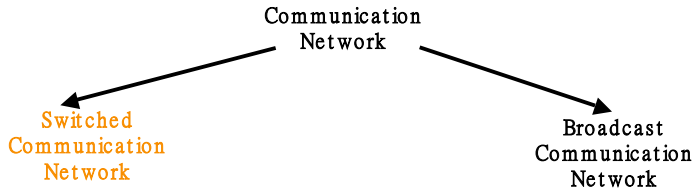

7

Switched Communication Networks

- Information transmitted along a path of intermediary nodes (“switches” or “routers”)
- Basic issue: how the switches figure out the next hop along the path
- Example and properties of a global switched communication network that you and millions of others use every day?
- Another example?

8

Taxonomy of Communication Networks

- Communication networks can be classified based on the way in which the nodes exchange information:

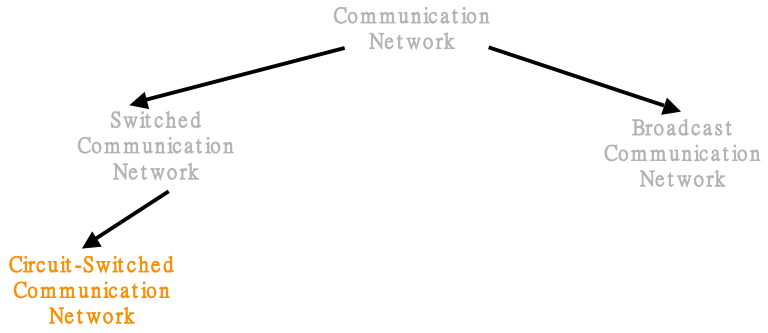

9

Circuit Switching (e.g., Phone Network)

- Establish: source creates circuit to destination
  - Node along the path store connection info
  - Nodes generally reserve resources for the connection
  - If circuit not available: “Busy signal”
- Transfer: source sends data over the circuit
  - No destination address, since nodes know path
- Teardown: source tears down circuit when done

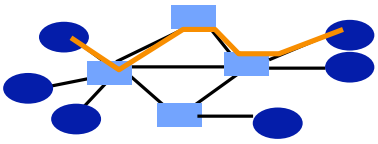

10

Circuit Switching

- Node (switch) in a circuit switching network

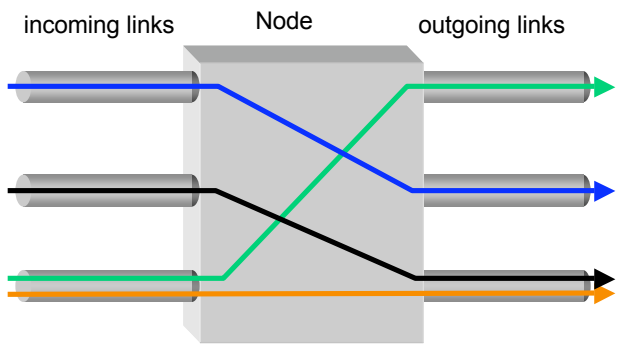

How does the node connect the incoming link to the outgoing?

11

Telephone Network

- Alexander Graham Bell
  - 1876: Demonstrates the telephone at US Centenary Exhibition in Philadelphia

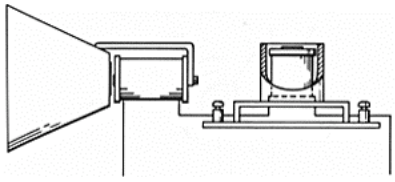

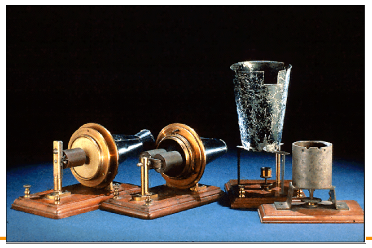

Circuit Switching With Human Operator

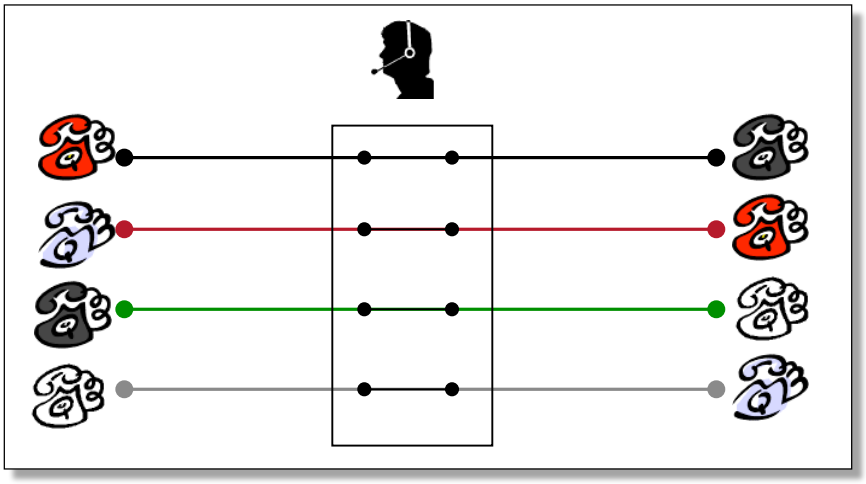

13

Telephone Network

- Almon Brown Strowger (1839 - 1902)
  - 1889: Invents the “girl-less, cuss-less” telephone system -- the *mechanical switching system*

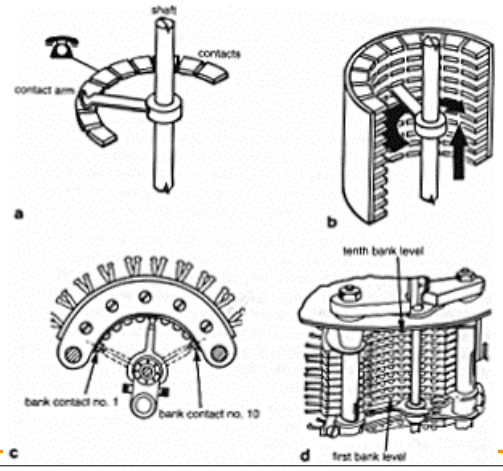

Timing in Circuit Switching

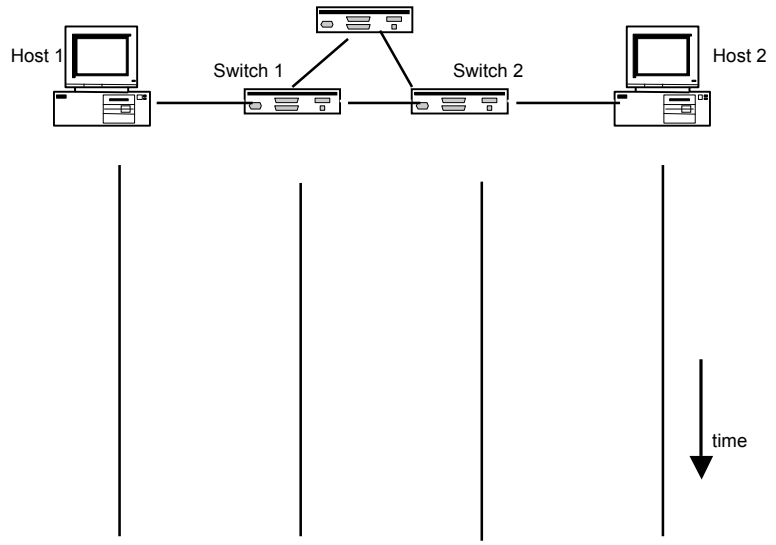

15

Timing in Circuit Switching

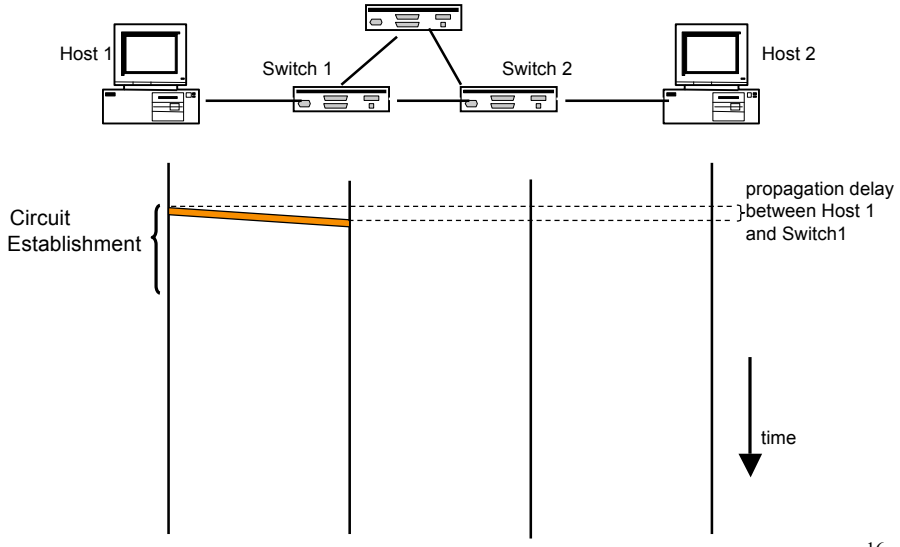

16

Timing in Circuit Switching

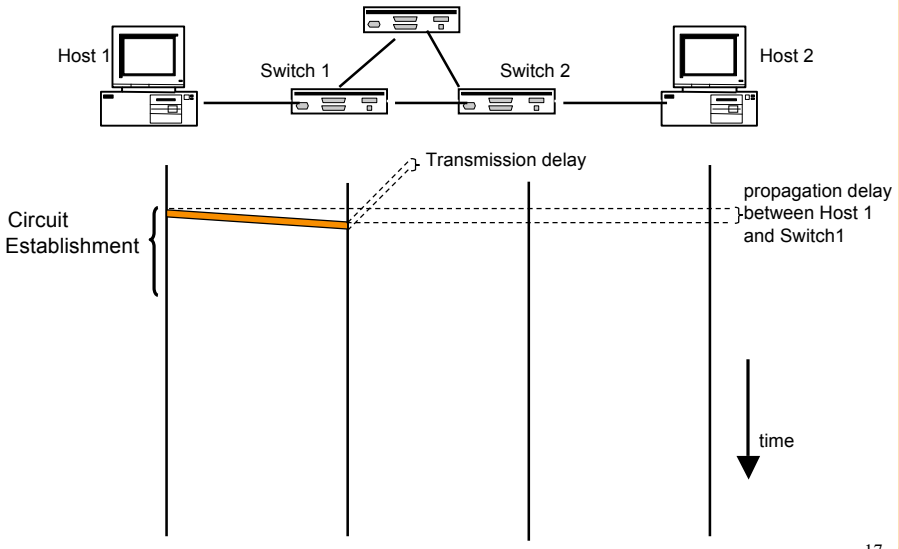

17

Timing in Circuit Switching

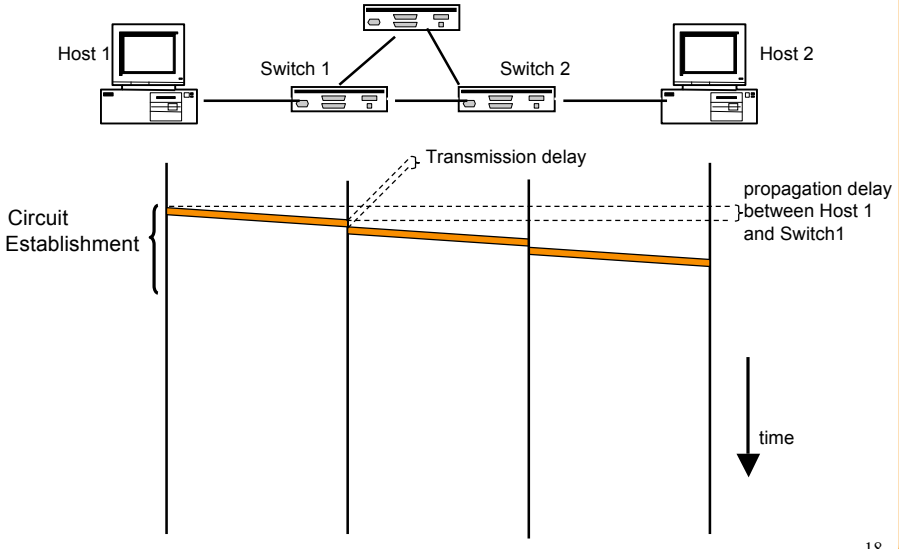

18

Timing in Circuit Switching

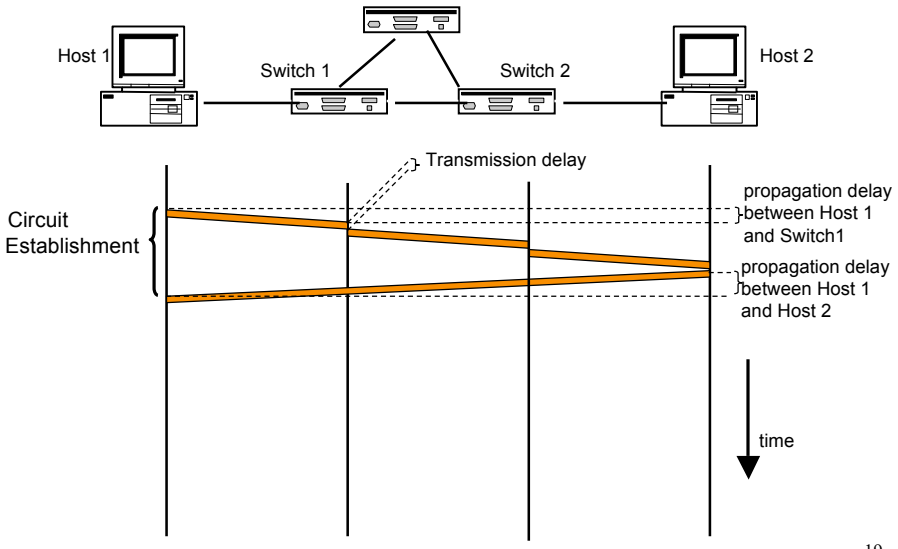

19

Timing in Circuit Switching

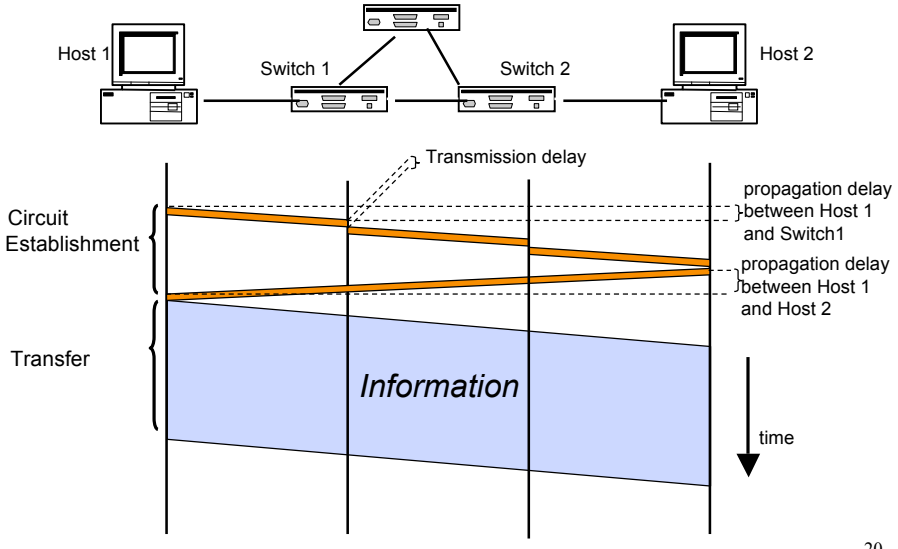

20

Timing in Circuit Switching

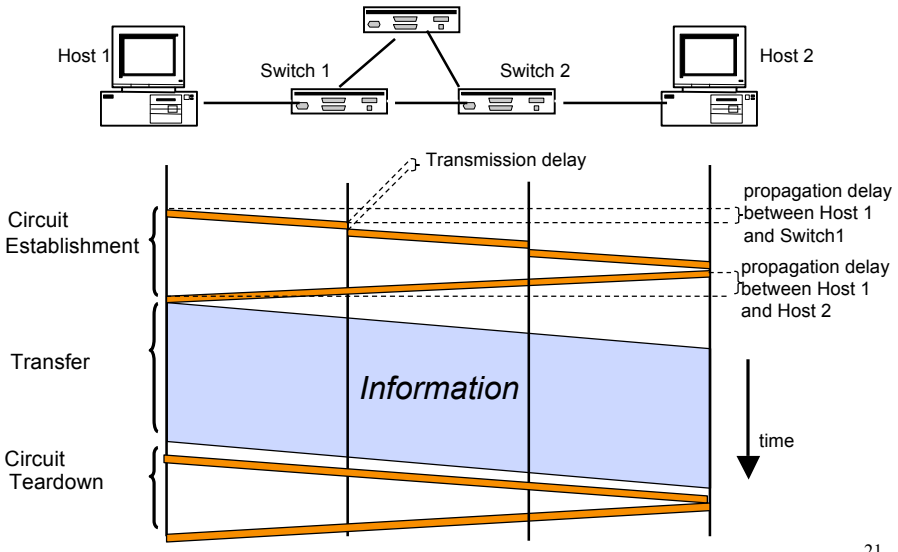

21

Circuit Switching

- Node (switch) in a circuit switching network

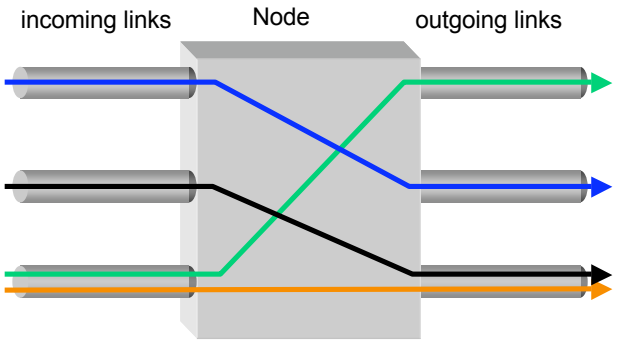

How do the black and orange circuits share the outgoing link?

22

Circuit Switching: *Multiplexing* a Link

- Time-division
  - Each circuit allocated certain time slots
- Frequency-division
  - Each circuit allocated certain frequencies

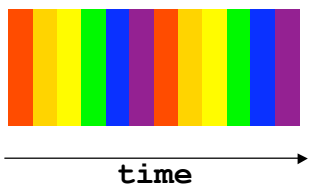

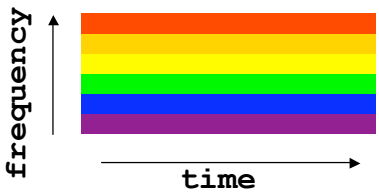

23

Time-Division Multiplexing/Demultiplexing

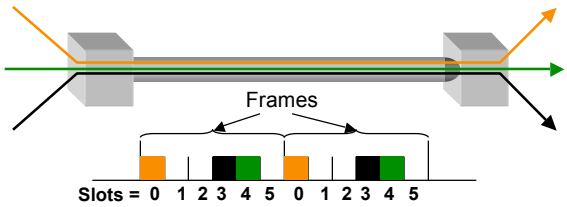

- Time divided into frames; frames into slots
- Relative slot position inside a frame determines to which conversation data belongs
  - E.g., slot 0 belongs to orange conversation
- Requires synchronization between sender and receiver—surprisingly difficult!
- In case of non-permanent conversations
  - Need to dynamically bind a slot to a conversation
  - How to do this?
- If a conversation does not use its circuit **the capacity is lost!**

24

Taxonomy of Communication Networks

- Communication networks can be classified based on the way in which the nodes exchange information:

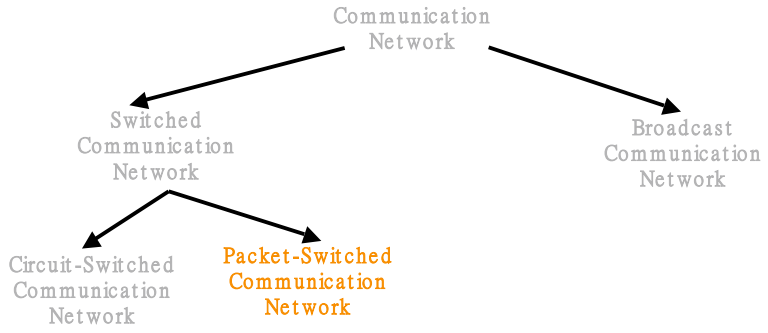

25

Packet Switching

- Data sent as chunks of formatted bit-sequences (**Packets**)
- Packets have following structure:

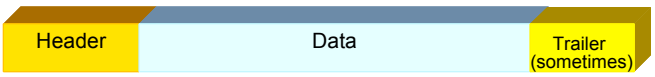

  - Header and Trailer carry control information (e.g., destination address, checksum)
- Each packet traverses the network from node to node along some path (**Routing**)
- Once a node receives the entire packet, it stores it (briefly) and then forwards it to the next node (**Store-and-Forward Networks**)
- Typically no capacity is allocated for packets

26

Packet Switching

- Node in a packet switching network

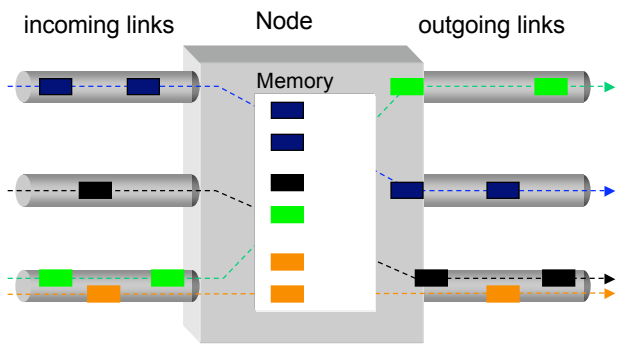

27

Packet Switching: Multiplexing/Demultiplexing

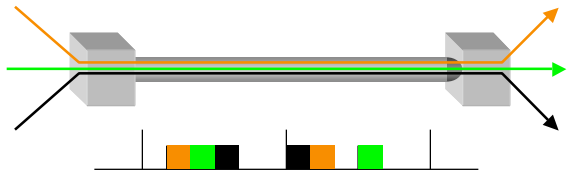

- Data from any conversation can be transmitted at any given time
  - Single conversation can use *the entire link capacity* if it is alone
- How to tell them apart?
  - Use meta-data (header) to describe data

28

5 Minute Break

Questions Before We Proceed?

29

Taxonomy of Communication Networks

- Communication networks can be classified based on the way in which the nodes exchange information:

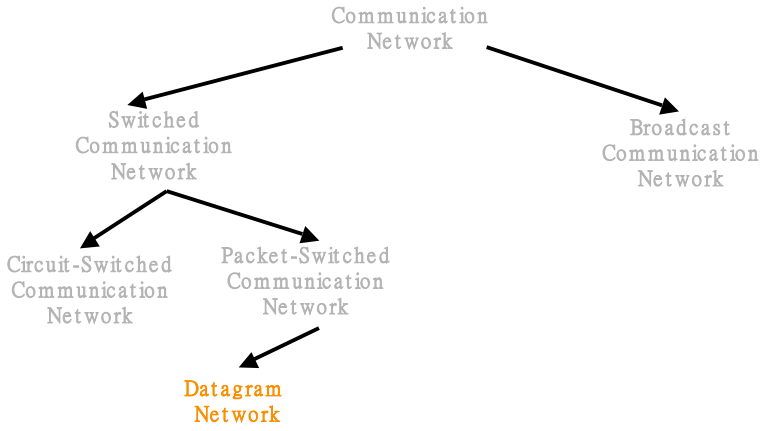

30

Datagram Packet Switching

- Each packet is independently switched
  - Each packet header contains full destination address
- No resources are pre-allocated (reserved) in advance
- Leverages "statistical multiplexing" (or *stat-muxing*)
  - Essentially: "chances are good that packets from different conversations won't all arrive at the same time, so we can get by without enough capacity for all of them at their peak transmission rate"
- Example: IP networks; postal system

31

Timing of Datagram Packet Switching

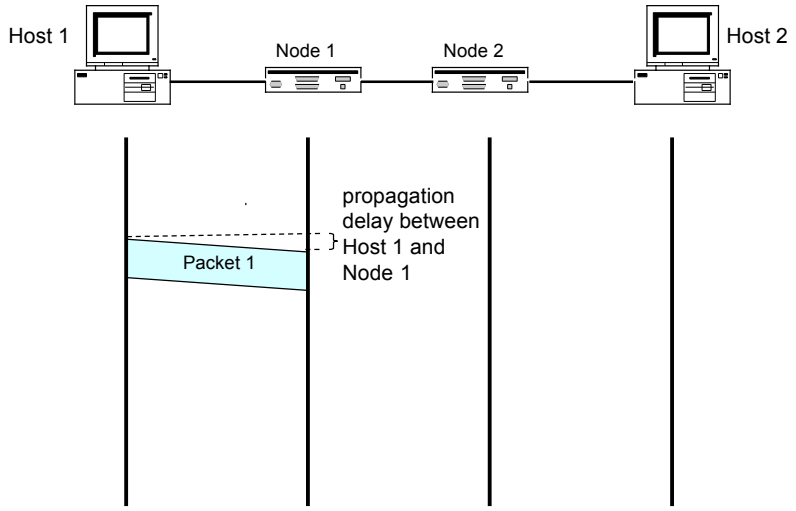

32

Timing of Datagram Packet Switching

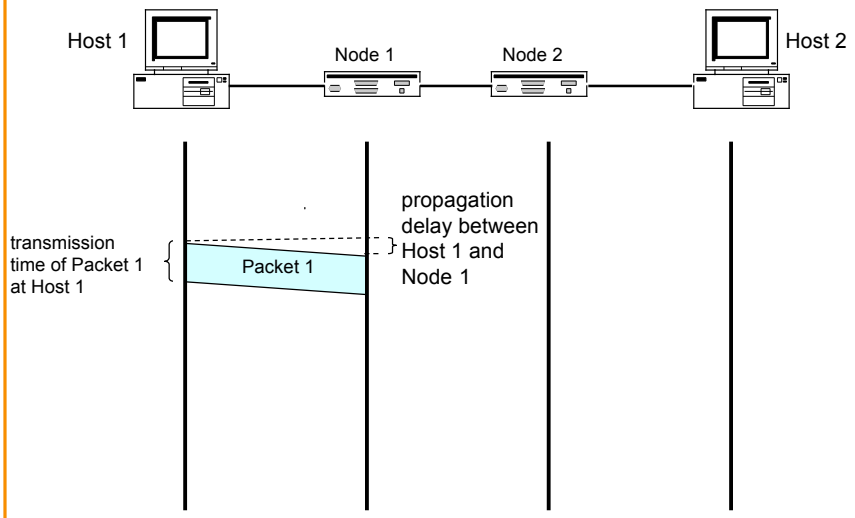

33

Timing of Datagram Packet Switching

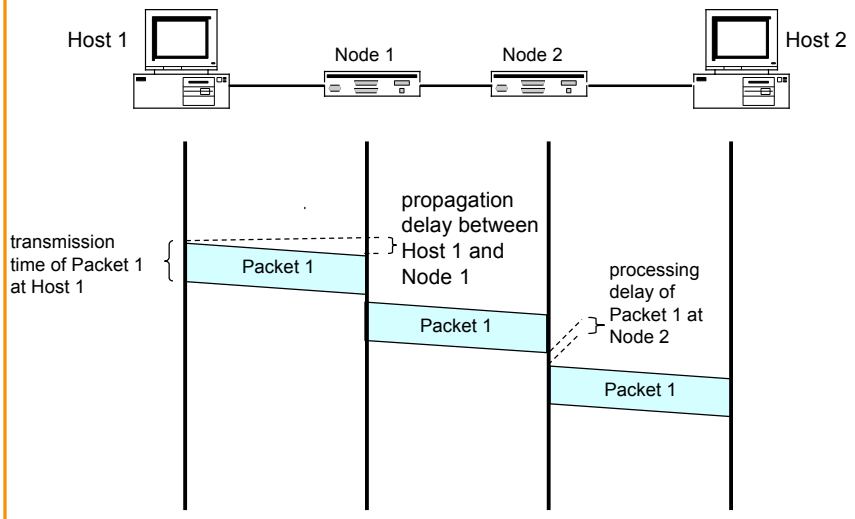

34

Timing of Datagram Packet Switching

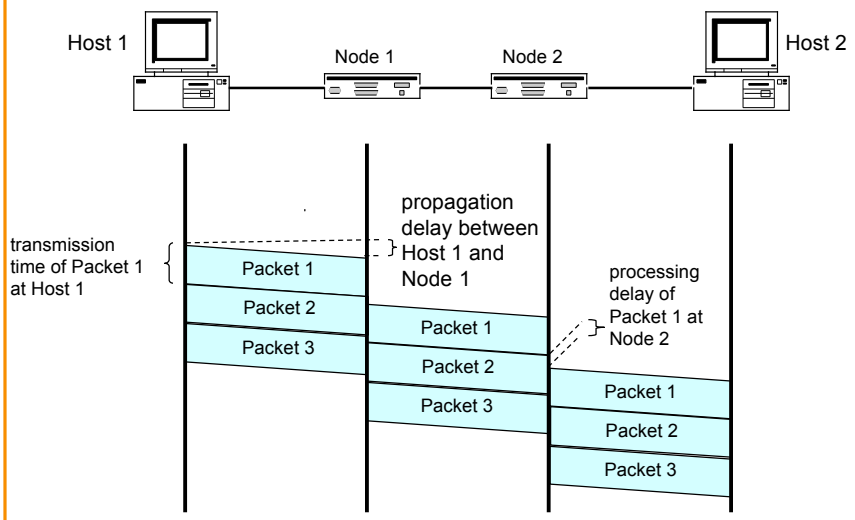

35

Datagram Packet Switching

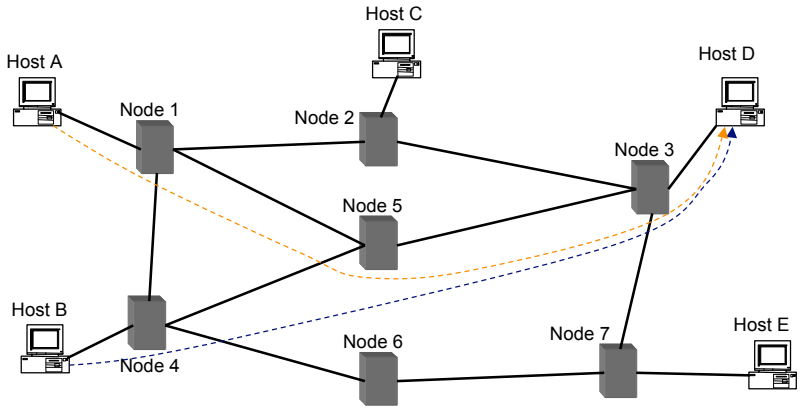

36

Datagram Packet Switching

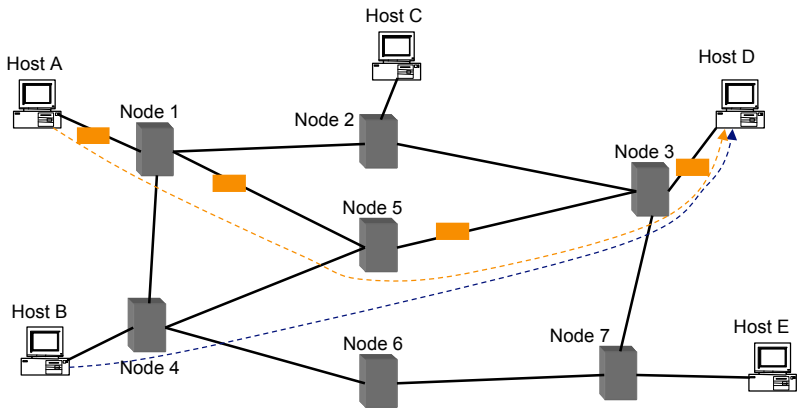

37

Datagram Packet Switching

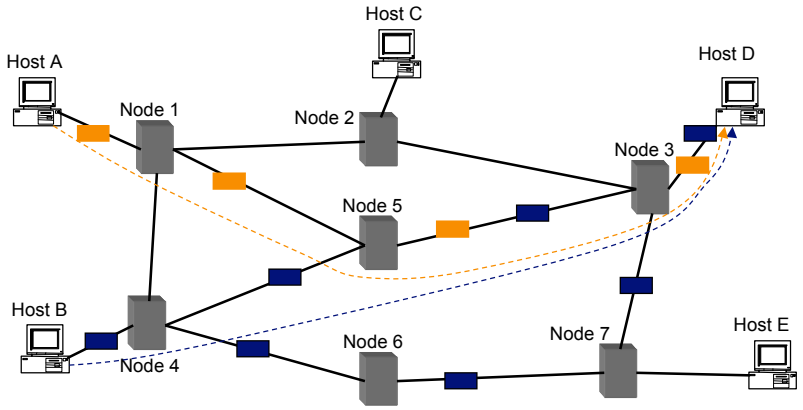

38

Taxonomy of Communication Networks

- Communication networks can be classified based on the way in which the nodes exchange information:

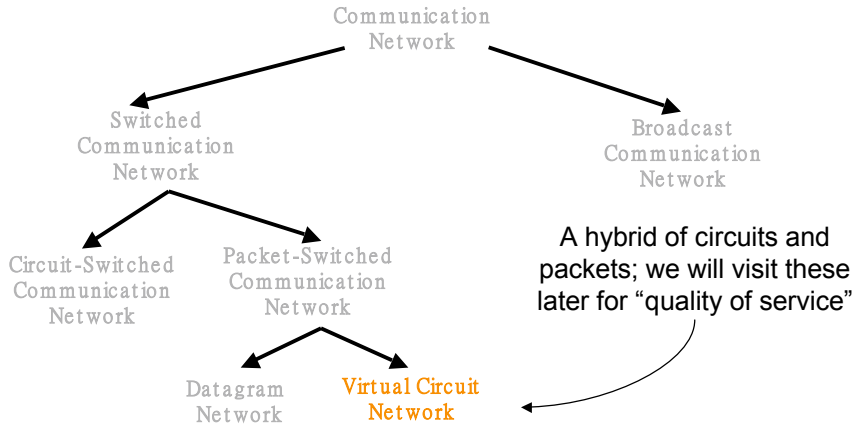

39

Advantages of Circuit Switching

- Guaranteed bandwidth
  - Predictable communication performance
  - Not "best-effort" delivery with no real guarantees
- Simple abstraction
  - Reliable communication channel between hosts
  - No worries about lost or out-of-order packets
- Simple forwarding
  - Forwarding based on time slot or frequency
  - No need to inspect a packet header
- Low per-packet overhead
  - Forwarding based on time slot or frequency
  - No IP (and TCP/UDP) header on each packet

40

Disadvantages of Circuit Switching

- Wasted bandwidth
  - Bursty traffic leads to idle connection during silent period
  - Unable to achieve gains from “statistical multiplexing”
- Blocked connections
  - Connection refused when resources are not sufficient
  - Unable to offer “okay” service to everybody
- Connection set-up delay
  - No communication until the connection is set up
  - Unable to avoid extra latency for small data transfers
- Network state
  - Network nodes must store per-connection information
  - Unable to avoid per-connection storage and state
  - This makes failures more disruptive!

41

Packet-Switching vs. Circuit-Switching

- Critical advantage of packet-switching over circuit switching: Exploitation of statistical multiplexing
- Another: since routers don’t know about individual conversations, when a router or link fails, it’s easy to fail over to a different path
- A third: easier for different parties to link their networks together because they’re **not** promising to reserve resources for one another
- However, packet-switching must handle congestion:
  - More complex routers
  - Harder to provide good network services (e.g., delay and bandwidth guarantees)
- In practice, sometimes combined, e.g., IP *over* SONET

42

Questions?

43

What Is A Protocol?

- A protocol is an agreement on how to communicate
- Includes syntax and semantics
  - How a communication is specified & structured
  - What a communication means

44

Examples of Protocols in Human Interactions

- Telephone
  1. Dialing.
  2. Ringing …
  3. Callee: “Hello?”
  4. Caller: “Hi, it’s Alice ….”
     Or: “Hi, it’s me” (← what’s *that* about?)
  5. Caller: “Hey, do you think … blah blah blah …” **pause**
  6. Callee: “Yeah, blah blah blah …” **pause**

45

Examples of Protocols in Human Interactions

- Asking a question
  1. Raise your hand.
  2. Wait to be called on.

  3. Or: wait for speaker to **pause** and vocalize

46

Examples of Protocols in Human Interactions

- Expressing approval
  1. Applause.

     Who is this woman?

     Why don't her fans applaud her performances?

  2. Foot-stomping
  3. The key: a protocol should effectively enable communication.

47

Example: HyperText Transfer Protocol

Request

```
GET /courses/archive/spring06/cos461/ HTTP/1.1
Host: www.cs.princeton.edu
User-Agent: Mozilla/4.03
CRLF
```

Response

```
HTTP/1.1 200 OK
Date: Mon, 6 Feb 2006 13:09:03 GMT
Server: Netscape-Enterprise/3.5.1
Last-Modified: Mon, 6 Feb  2006 11:12:23 GMT
Content-Length: 21
CRLF
Site under construction
```

48

Example: IP Packet

4-bit Version	4-bit Header Length	8-bit Type of Service (TOS)	16-bit Total Length (Bytes)	
16-bit Identification			3-bit Flags	13-bit Fragment Offset
8-bit Time to Live (TTL)		8-bit Protocol	16-bit Header Checksum	
32-bit Source IP Address				
32-bit Destination IP Address				
Options (if any)				
Payload				

20-byte header

IP: Best-Effort Packet Delivery

- Packet switching
  - Send data in packets
  - Header with source & destination address
- "Best effort" delivery
  - Packets may be lost
  - Packets may be corrupted
  - Packets may be delivered out of order

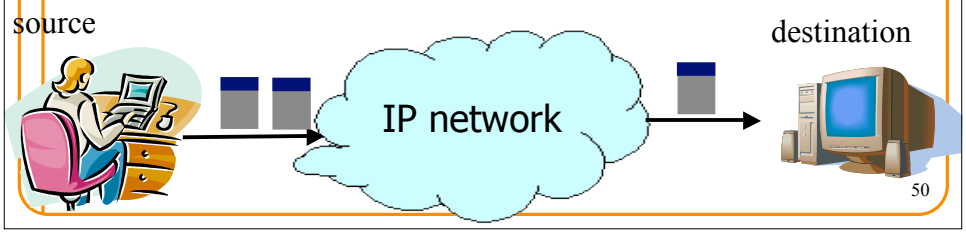

Example: Transmission Control Protocol

- Communication service
  - Ordered, reliable byte stream
  - Simultaneous transmission in both directions
- Key mechanisms at end hosts
  - Retransmit lost and corrupted packets
  - Discard duplicate packets and put packets in order
  - Flow control to avoid overloading the receiver buffer
  - Congestion control to adapt sending rate to network load

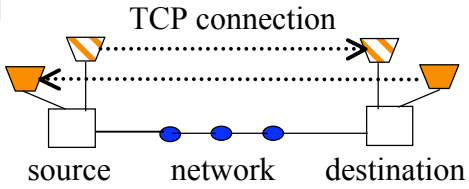

51

Protocol Standardization

- Ensure communicating hosts speak the same protocol
  - Standardization to enable multiple implementations
  - Or, the same folks have to write all the software
- Standardization: Internet Engineering Task Force
  - Based on working groups that focus on specific issues
  - Produces "Request For Comments" (RFCs)
    - Promoted to standards via rough consensus and running code
  - IETF Web site is http://www.ietf.org
  - RFCs archived at http://www.rfc-editor.org (per Homework #1)
- De facto standards: same folks writing the code
  - P2P file sharing, Skype, <your protocol here>…

52

End System: Computer on the ‘Net

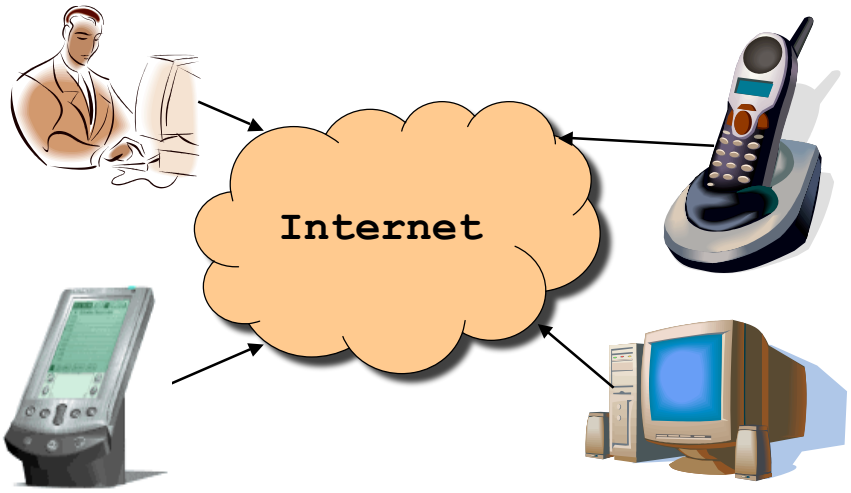

Also known as a “host”…

53

Clients and Servers

- Client program
  - Running on end host
  - Requests service
  - E.g., Web browser

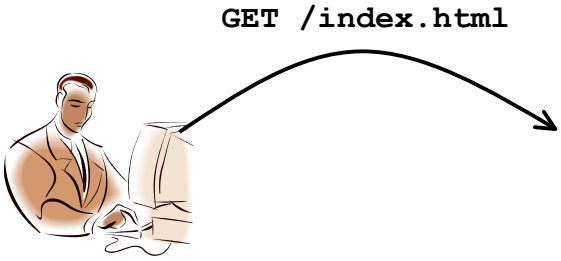

54

Clients and Servers

- Client program
  - Running on end host
  - Requests service
  - E.g., Web browser
- Server program
  - Running on end host
  - Provides service
  - E.g., Web server

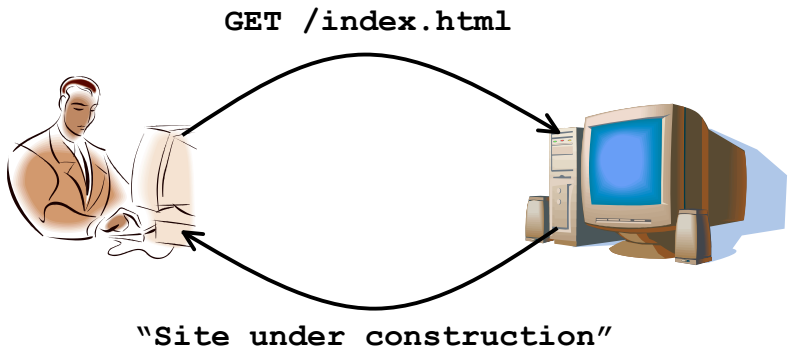

55

Clients Are Not Necessarily Human

- Example: Web crawler (or spider)
  - Automated client program
  - Tries to discover & download many Web pages
  - Forms the basis of search engines like Google
- Spider client
  - Start with a base list of popular Web sites
  - Download the Web pages
  - Parse the HTML files to extract hypertext links
  - Download these Web pages, too
  - And repeat, and repeat, and repeat...
  - (Per Project #2)

56

Client-Server Communication

- Client "sometimes on"
  - Initiates a request to the server when interested
  - E.g., Web browser on your laptop or cell phone
  - Doesn't communicate directly with other clients
  - Needs to know the server's address
- Server is "always on"
  - Services requests from many client hosts
  - E.g., Web server for the www.cnn.com Web site
  - Doesn't initiate contact with the clients
  - Needs a fixed, well-known address

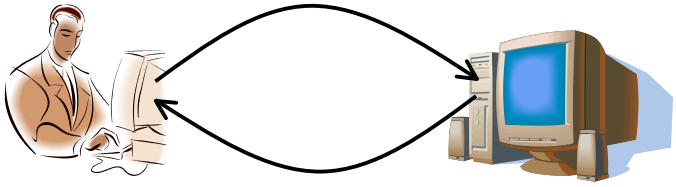

57

Peer-to-Peer Communication

- No always-on server at the center of it all
  - Hosts can come and go, and change addresses
  - Hosts may have a different address each time
- Example: peer-to-peer file sharing
  - Any host can request files, send files, query to find where a file is located, respond to queries, and forward queries
  - Scalability by harnessing millions of peers
  - Each peer acting as both a client and server

58

Client and Server Processes

- Program vs. process
  - Program: collection of code
  - Process: a running program on a host
- Communication between processes
  - Same end host: inter-process communication
    - Governed by the operating system on the end host
  - Different end hosts: exchanging messages
    - Governed by the network protocols
- Client and server processes
  - Client process: process that initiates communication
  - Server process: process that waits to be contacted

59

Summary

- Types of communication networks
  - Broadcast, circuit-switched, packet-switched
  - Advantages & disadvantages of each
- Protocols: agreement on how to communicate
  - For networks, often requires formal standardization
- Roles of endpoints in communication:
  - Clients (initiate communication)
  - Servers (receive requests)
  - Peer-to-peer (hosts play both roles, linked to one another)
- Next lecture: "Architecture" and the "End-to-End Principle"
  - Note: on Wednesday Sept. 6 - Monday is a **holiday**!
  - Read through 1.3 of the Peterson/Davie book
  - Take the survey (**http://tinyurl.com/fbc7u**) ASAP and join the mailing list if you haven't already

60