EECS150

Section 8

Arithmetic Circuits

Fall 2001

Arithmetic Circuits

- Excellent Examples of Combinational Logic Design
- Time vs. Space Trade-offs
  - Doing things fast may require more logic and thus more space
  - Example: carry lookahead logic
- Arithmetic and Logic Units
  - General-purpose building blocks
  - Critical components of processor datapaths
  - Used within most computer instructions

Number Systems

- Representation of positive numbers is the same in most systems
- Major differences are in how negative numbers are represented
- Representation of negative numbers come in three major schemes
  - Sign and magnitude
  - 1s complement
  - 2s complement
- Assumptions
  - We'll assume a 4 bit machine word
  - 16 different values can be represented
  - Roughly half are positive, half are negative

Sign and Magnitude

- One bit dedicate to sign (positive or negative)
  - sign: 0 = positive (or zero), 1 = negative
- Rest represent the absolute value or magnitude
  - three low order bits: 0 (000) thru 7 (111)
- Range for n bits
  - +/– 2n–1 –1 (two representations for 0)
- Cumbersome addition/subtraction
  - must compare magnitudes to determine sign of result

0 100 = + 4

1 100 = – 4

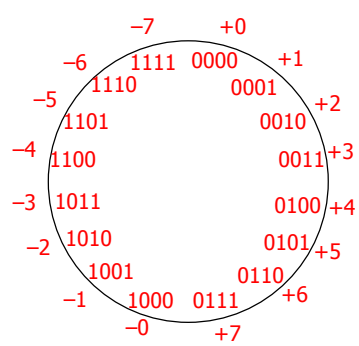

1s Complement

- If N is a positive number, then the negative of N (its 1s complement or N') is $N' = (2^n - 1) - N$
  - Example: 1s complement of 7

$$
\begin{array}{lcr}
2^4 & = & 10000 \\
1 & = & \underline{00001} \\
2^4 - 1 & = & 1111 \\
7 & = & \underline{0111} \\
 & & 1000 \quad = \ -7 \text{ in 1s complement form}
\end{array}
$$

  - Shortcut: simply compute bit-wise complement (0111 -> 1000)

1s complement (cont'd)

- Subtraction implemented by 1s complement and then addition
- Two representations of 0
  - Causes some complexities in addition
- High-order bit can act as sign bit

0 100 = + 4

1 011 = – 4

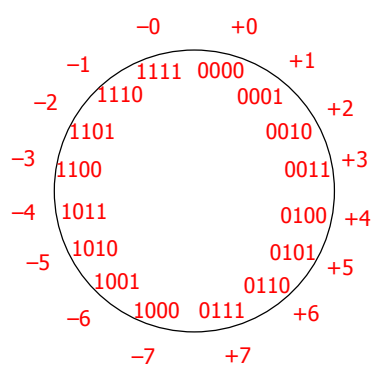

2s Complement

- 1s complement with negative numbers shifted one position clockwise
  - Only one representation for 0
  - One more negative number than positive number
  - High-order bit can act as sign bit

0 100 = + 4

1 100 = – 4

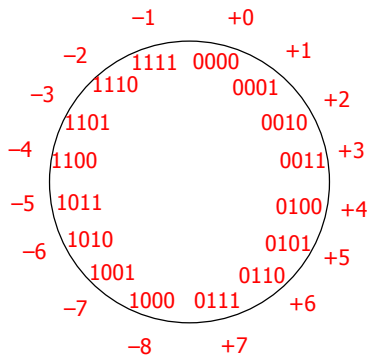

2s complement (cont'd)

- If N is a positive number, then the negative of N (its 2s complement or N*) is N* = 2n – N
  - Example: 2s complement of 7

$$\begin{array}{lrcl} & 2^4 & = & 10000 \\ \text{subtract} & 7 & = & \underline{\;0111\;} \\ & & & 1001 \;=\; \text{repr. of } -7 \end{array}$$

  - Example: 2s complement of –7

$$\begin{array}{lrcl} & 2^4 & = & 10000 \\ \text{subtract} & -7 & = & \underline{\;1001\;} \\ & & & 0111 \;=\; \text{repr. of } 7 \end{array}$$

  - Shortcut: 2s complement = bit-wise complement + 1
    - 0111 -> 1000 + 1 -> 1001 (representation of -7)
    - 1001 -> 0110 + 1 -> 0111 (representation of 7)

Addition / Subtraction

- Simple Addition and Subtraction
  - Simple scheme makes 2s complement the virtually unanimous choice for integer number systems in computers

4	0100	– 4	1100
+ 3	0011	+ (– 3)	1101
7	0111	– 7	11001

4	0100	– 4	1100
– 3	1101	+ 3	0011
1	10001	– 1	1111

Why Can the Carry-out be Ignored?

- Can't ignore it completely
  - Needed to check for overflow (see next two slides)
- When there is no overflow, carry-out may be true but can be ignored

  – M + N when N > M:

  $M^* + N = (2^n - M) + N = \underline{2^n +} (N - M)$

  ignoring carry-out is just like subtracting 2^n

  – M + – N where $N + M \leq 2^n - 1$

  $(-M) + (-N) = M^* + N^* = (2^n - M) + (2^n - N) = 2^n - (M + N) \underline{+ 2^n}$

  ignoring the carry, it is just the 2s complement representation for – (M + N)

Overflow in 2s Complement

- Overflow conditions
  - Add two positive numbers to get a negative number
  - Add two negative numbers to get a positive number

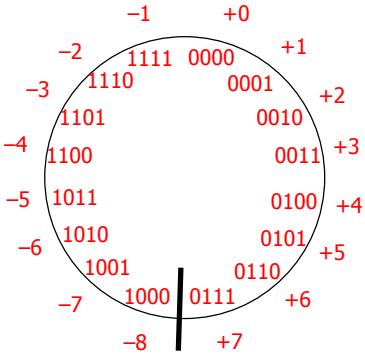

5 + 3 = –8

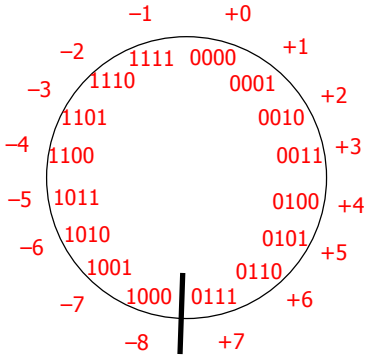

–7 – 2 = +7

Overflow Conditions

- Overflow when carry into sign bit position is not equal to carry-out

```
  5        0 1 1 1
  3        0 1 0 1
 ---       0 0 1 1
 – 8       1 0 0 0
```

overflow

```
 – 7       1 0 0 0
 – 2        1 0 0 1
 ---        1 1 1 0
   7      1 0 1 1 1
```

overflow

```
  5        0 0 0 0
  2        0 1 0 1
 ---        0 0 1 0
   7        0 1 1 1
```

no overflow

```
 – 3       1 1 1 1
 – 5        1 1 0 1
 ---        1 0 1 1
 – 8      1 1 0 0 0
```

no overflow

Circuits for Binary Addition

- Half adder (add 2 1-bit numbers)
  - Sum = Ai' Bi + Ai Bi' = Ai xor Bi
  - Cout = Ai Bi
- Full adder (carry-in to cascade for multi-bit adders)
  - Sum = Ci xor A xor B
  - Cout = B Ci + A Ci + A B = Ci (A + B) + A B

Ai	Bi	Sum	Cout
0	0	0	0
0	1	1	0
1	0	1	0
1	1	1	1

Ai	Bi	Cin	Sum	Cout
0	0	0	0	0
0	0	1	1	0
0	1	0	1	0
0	1	1	0	1
1	0	0	1	0
1	0	1	0	1
1	1	0	0	1
1	1	1	1	1

Full adder implementations

- Standard approach
  - 6 gates
  - 2 XORs, 2 ANDs, 2 ORs

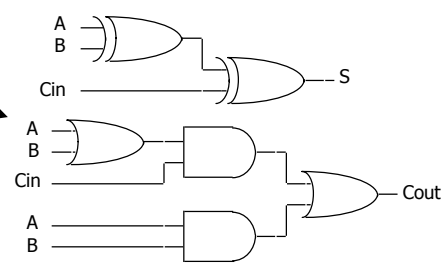

Cout = A B + Cin (A xor B) = A B + B Cin + A Cin

- Alternative implementation
  - 5 gates
  - half adder is an XOR gate and AND gate
  - 2 XORs, 2 ANDs, 1 OR

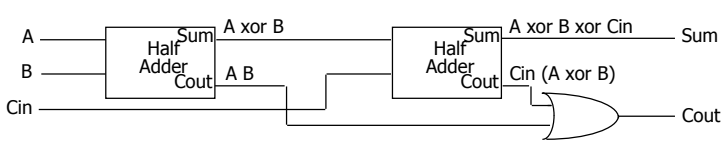

Adder/Subtractor

- Use an adder to do subtraction thanks to 2s complement representation
  - A – B = A + (– B) = A + B' + 1
  - Control signal selects B or 2s complement of B

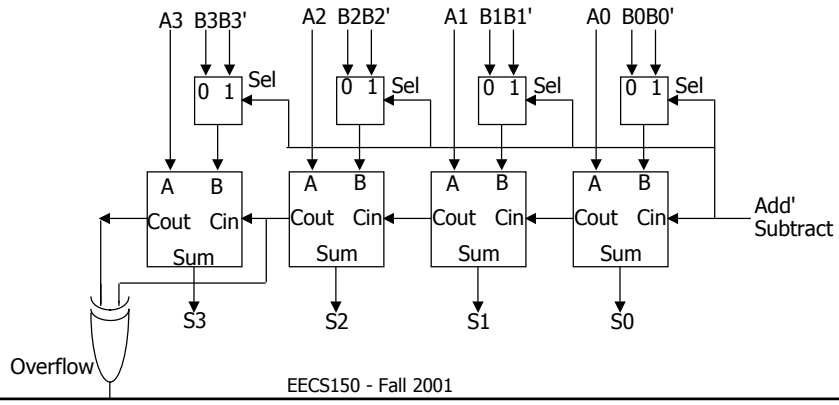

Ripple-Carry Adders

- Critical Delay
  - The propagation of carry from low to high order stages

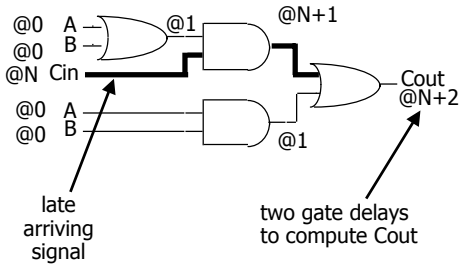

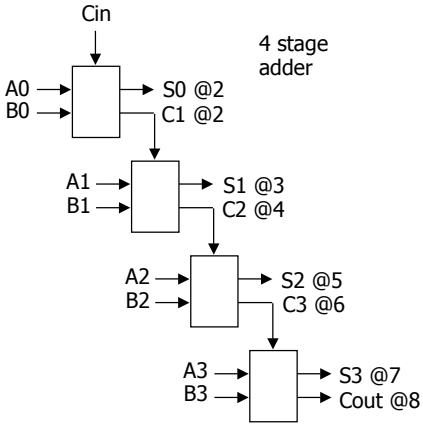

Ripple-Carry Adders (cont'd)

- Critical delay
  - The propagation of carry from low to high order stages
  - 1111 + 0001 is the worst case addition
  - Carry must propagate through all bits

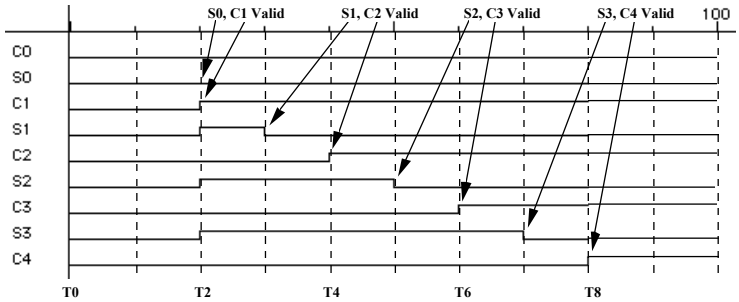

Carry-Lookahead Logic

- Carry generate: Gi = Ai Bi
  - Must generate carry when A = B = 1
- Carry propagate: Pi = Ai xor Bi
  - Carry-in will equal carry-out here
- Sum and Cout can be re-expressed in terms of generate/propagate:
  - Si = Ai xor Bi xor Ci
    = Pi xor Ci
  - Ci+1 = Ai Bi + Ai Ci + Bi Ci
    = Ai Bi + Ci (Ai + Bi)
    = Ai Bi + Ci (Ai xor Bi)
    = Gi + Ci Pi

Carry-Lookahead Logic (cont'd)

- Re-express the carry logic as follows:
  - C1 = G0 + P0 C0
  - C2 = G1 + P1 C1 = G1 + P1 G0 + P1 P0 C0
  - C3 = G2 + P2 C2 = G2 + P2 G1 + P2 P1 G0 + P2 P1 P0 C0
  - C4 = G3 + P3 C3 = G3 + P3 G2 + P3 P2 G1 + P3 P2 P1 G0 + P3 P2 P1 P0 C0
- Each of the carry equations can be implemented with two-level logic
  - All inputs are now directly derived from data inputs and not from intermediate carries
  - this allows computation of all sum outputs to proceed in parallel

Carry-Lookahead Implementation

- Adder with propagate and generate outputs

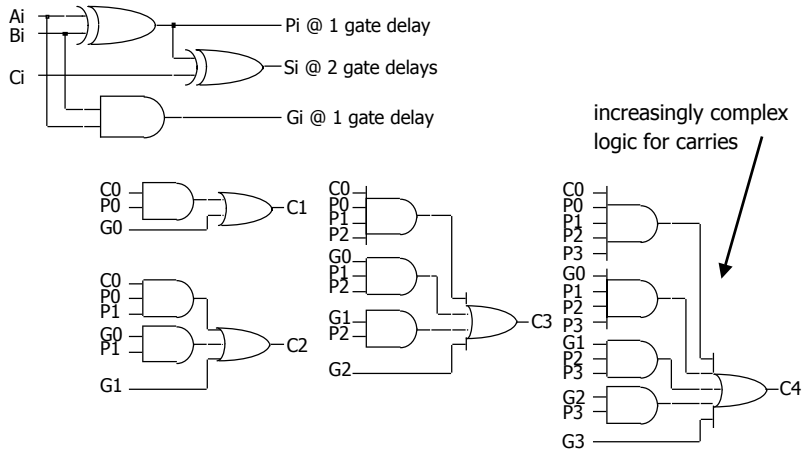

Carry-Lookahead Implementation

- Carry-lookahead logic generates individual carries
  - Sums computed much more quickly in parallel
  - However, cost of carry logic increases with more stages

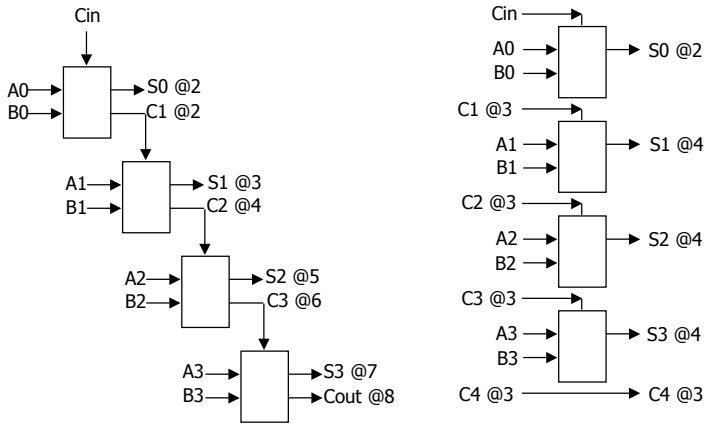

Cascaded Carry-Lookahead Logic

- Carry-lookahead adder
  - 4 four-bit adders with internal carry lookahead
  - Second level carry lookahead unit extends lookahead to 16 bits

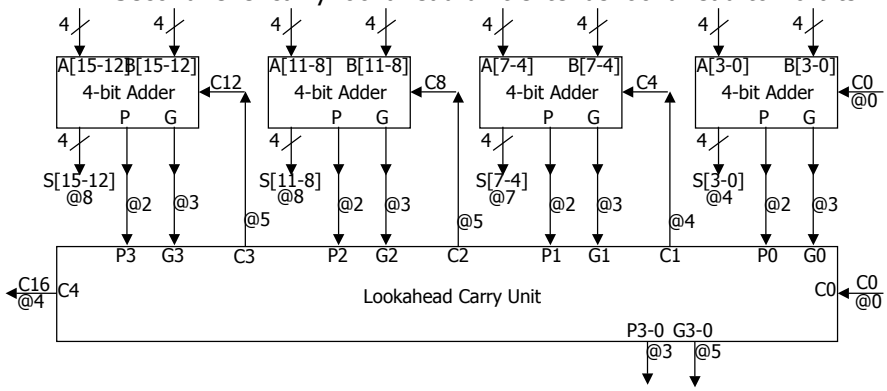

Carry-Select Adder

- Redundant hardware to make carry calculation go faster
  - Compute two high-order sums in parallel while waiting for carry-in
  - One assuming carry-in is 0 and another assuming carry-in is 1
  - Select correct result once carry-in is finally computed

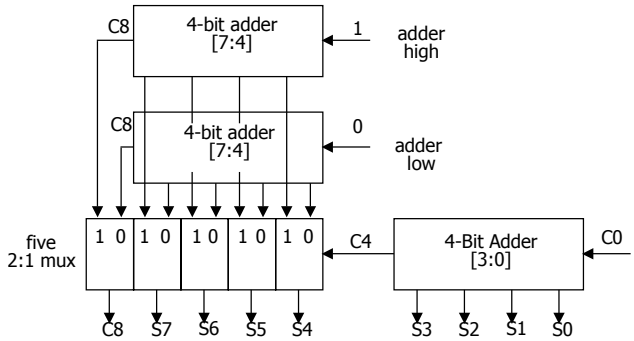

Arithmetic Logic Unit Design

M = 0, logical bitwise operations

S1	S0	Function	Comment
0	0	Fi = Ai	input Ai transferred to output
0	1	Fi = not Ai	complement of Ai transferred to output
1	0	Fi = Ai xor Bi	compute XOR of Ai, Bi
1	1	Fi = Ai xnor Bi	compute XNOR of Ai, Bi

M = 1, C0 = 0, arithmetic operations

0	0	F = A	input A passed to output
0	1	F = not A	complement of A passed to output
1	0	F = A plus B	sum of A and B
1	1	F = (not A) plus B	sum of B and complement of A

M = 1, C0 = 1, arithmetic operations

0	0	F = A plus 1	increment A
0	1	F = (not A) plus 1	twos complement of A
1	0	F = A plus B plus 1	increment sum of A and B
1	1	F = (not A) plus B plus 1	B minus A

logical and arithmetic operations
not all operations appear useful, but "fall out" of internal logic

Arithmetic Logic Unit Design

- Sample ALU – truth table

M	S1	S0	Ci	Ai	Bi	Fi	Ci+1
0	0	0	X	0	X	0	X
			X	1	X	1	X
	0	1	X	0	X	1	X
			X	1	X	0	X
	1	0	X	0	0	0	X
			X	0	1	1	X
			X	1	0	1	X
			X	1	1	0	X
	1	1	X	0	0	1	X
			X	0	1	0	X
			X	1	0	0	X
			X	1	1	1	X
1	0	0	0	0	X	0	X
			0	1	X	1	X
	0	1	0	0	X	1	X
			0	1	X	0	X
	1	0	0	0	0	0	0
			0	0	1	1	0
			0	1	0	1	0
			0	1	1	0	1
	1	1	0	0	0	1	0
			0	0	1	0	1
			0	1	0	0	0
			0	1	1	1	0
1	0	0	1	0	X	1	0
			1	1	X	0	1
	0	1	1	0	X	0	1
			1	1	X	1	0
	1	0	1	0	0	1	0
			1	0	1	0	1
			1	1	0	0	1
			1	1	1	1	1
	1	1	1	0	0	0	1
			1	0	1	1	1
			1	1	0	1	0
			1	1	1	0	1

Arithmetic Logic Unit Design

- Sample ALU – multi-level discrete gate logic implementation

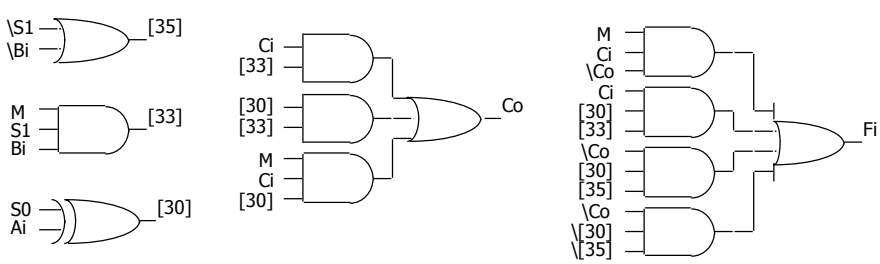

12 gates

Arithmetic Logic Unit Design

- Sample ALU – clever multi-level implementation

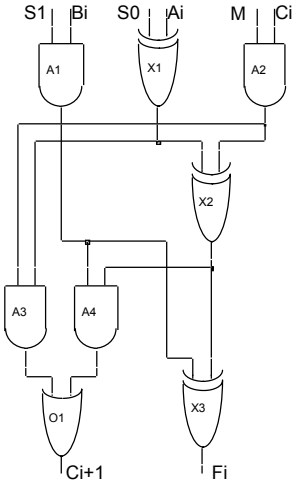

first-level gates
  use S0 to complement Ai
    S0 = 0 causes gate X1 to pass Ai
    S0 = 1 causes gate X1 to pass Ai'
  use S1 to block Bi
    S1 = 0 causes gate A1 to make Bi go forward as 0 (don't want Bi for operations with just A)
    S1 = 1 causes gate A1 to pass Bi
  use M to block Ci
    M = 0 causes gate A2 to make Ci go forward as 0 (don't want Ci for logical operations)
    M = 1 causes gate A2 to pass Ci

other gates
  for M=0 (logical operations, Ci is ignored)
    Fi = S1 Bi xor (S0 xor Ai)
      = S1'S0' (Ai) + S1'S0 (Ai') +
        S1 S0' (Ai Bi' + Ai' Bi) + S1 S0 (Ai' Bi' + Ai Bi)
  for M=1 (arithmetic operations)
    Fi = S1 Bi xor ((S0 xor Ai) xor Ci) =
    Ci+1 = Ci (S0 xor Ai) + S1 Bi ((S0 xor Ai) xor Ci) =

    just a full adder with inputs S0 xor Ai, S1 Bi, and Ci

BCD Addition

Decimal digits 0 thru 9 represented as 0000 thru 1001 in binary

Addition:

5 = 0101
3 = 0011
1000 = 8

5 = 0101
8 = 1000
1101 = 13!

Problem when digit sum exceeds 9

Solution: add 6 (0110) if sum exceeds 9!

5 = 0101
8 = 1000
1101
6 = 0110
1 0011 = 1 3 in BCD

9 = 1001
7 = 0111
1 0000 = 16 in binary
6 = 0110
1 0110 = 1 6 in BCD

Adder Implementation

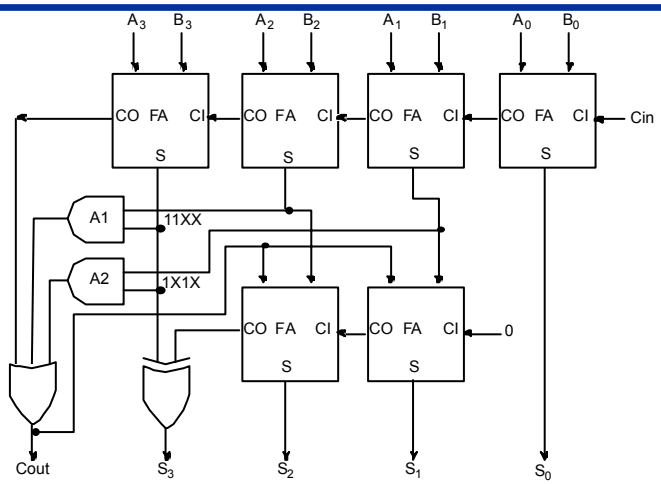

Add 0110 to sum whenever it exceeds 1001 (11XX or 1X1X)

Combinational Multiplier

multiplicand	1101	(13)
multiplier	* 1011	(11)

product of 2 4-bit numbers is an 8-bit number

Partial products

```
   1101
  1101
 0000
1101
--------
10001111   (143)
```

Partial Product Accumulation

				A3	A2	A1	A0
				B3	B2	B1	B0
				A2 B0	A2 B0	A1 B0	A0 B0
			A3 B1	A2 B1	A1 B1	A0 B1	
		A3 B2	A2 B2	A1 B2	A0 B2		
	A3 B3	A2 B3	A1 B3	A0 B3			
S7	S6	S5	S4	S3	S2	S1	S0

Partial Product Accumulation

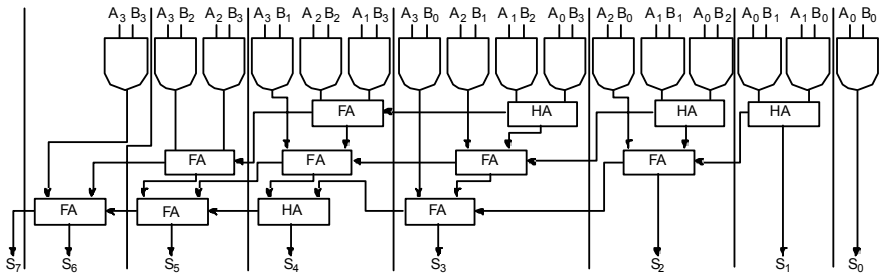

Note use of parallel carry-outs to form higher order sums

12 Adders, if full adders, this is 6 gates each = 72 gates

16 gates form the partial products

total = 88 gates!

Another Representation

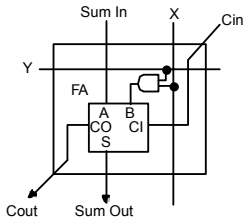

Building block: full adder + and

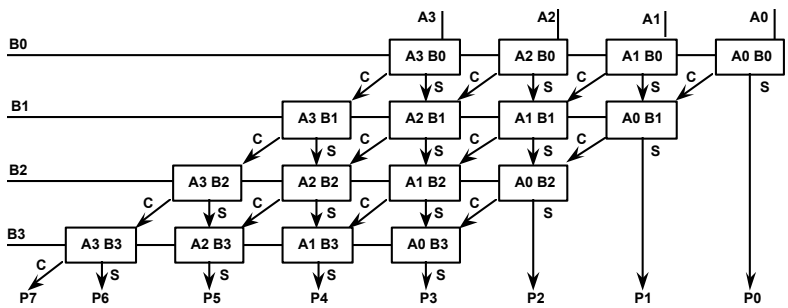

4 x 4 array of building blocks