EECS150

Section 10

Controller Implementations

Fall 2001

Moore

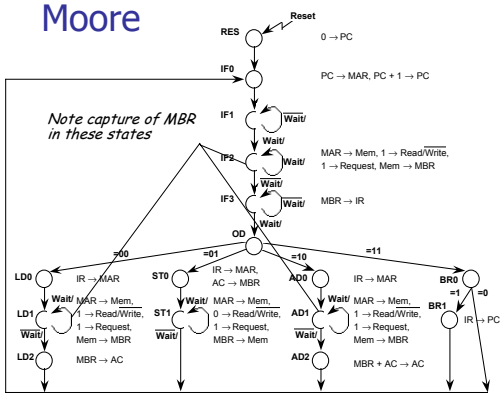

Implement of Processor FSMs

- Classical Finite State Machine Design
- Divide and Conquer Approach: Time-State Method
  - Partition FSM into multiple communicating FSMs
- Exploit MSI Functionality: Jump Counters
  - Counters, Multiplexers, Decoders
- Microprogramming: ROM-based methods
  - Direct encoding of next states and outputs

Memory-Register Interface Timing

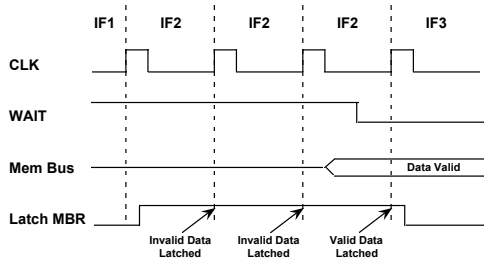

Valid data latched on IF2 to IF3 transition because data must be valid before Wait can go low

Processor / Memory Interface

- Problem:
  - The processor and memory often do not share the same clock.
- Solution:
  - Use appropriate handshaking

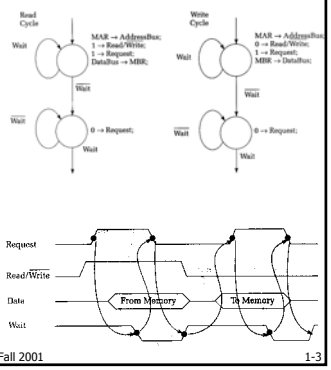

Processor Signal FLow

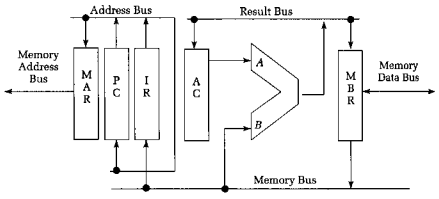

Moore Machine Diagram

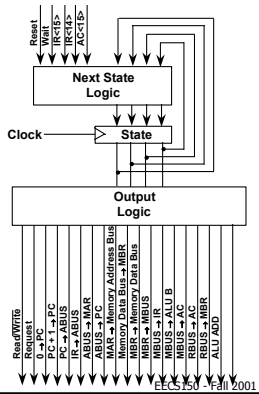

16 states, 4 bit state register

Next State Logic: 9 Inputs, 4 Outputs

Output Logic: 4 Inputs, 18 Outputs

These can be implemented via ROM or PAL/PLA

Next State: 512 x 4 bit ROM
Output: 16 x 18 bit ROM

Synchronous Mealy Machines

- Standard Mealy Machine has asynchronous outputs
- These change in response to input changes, independent of clock
- Revise Mealy Machine design so outputs change only on clock edges
- One approach: non-overlapping clocks

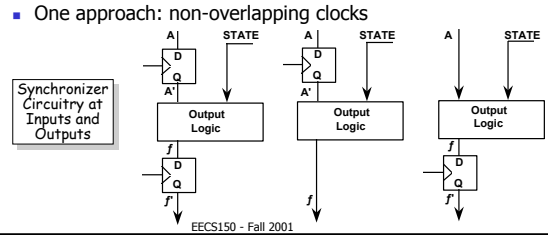

Moore Machine State Table

Reset	Wait	IR<15>	IR<14>	AC<15>	Current State	Next State	Register Transfer Ops
1	X	X	X	X	X	RES (0000)	
0	X	X	X	X	RES (0000)	IF0 (0001)	0 → PC
0	X	X	X	X	IF0 (0001)	IF1 (0010)	PC → MAR, PC + 1 → PC
0	0	X	X	X	IF1 (0010)	IF1 (0010)	
0	1	X	X	X	IF1 (0010)	IF2 (0011)	
0	1	X	X	X	IF2 (0011)	IF2 (0011)	MAR → Mem, Read,
0	0	X	X	X	IF2 (0011)	IF3 (0100)	Request, Mem → MBR
0	0	X	X	X	IF3 (0100)	IF3 (0100)	MBR → IR
0	1	X	X	X	IF3 (0100)	OD (0101)	
0	X	0	0	X	OD (0101)	LD0 (0110)	
0	X	0	1	X	OD (0101)	ST0 (1001)	
0	X	1	0	X	OD (0101)	AD0 (1011)	
0	X	1	1	X	OD (0101)	BR0 (1110)	
0	X	X	X	X	LD0 (0110)	LD1 (0111)	IR → MAR
0	1	X	X	X	LD1 (0111)	LD1 (0111)	MAR → Mem, Read,
0	0	X	X	X	LD1 (0111)	LD2 (1000)	Request, Mem → MBR
0	X	X	X	X	LD2 (1000)	IF0 (0001)	MBR → AC
0	X	X	X	X	ST0 (1001)	ST1 (1010)	IR → MAR, AC → MBR
0	1	X	X	X	ST1 (1010)	ST1 (1010)	MAR → Mem, Write,
0	0	X	X	X	ST1 (1010)	IF0 (0001)	Request, MBR → Mem
0	X	X	X	X	AD0 (1011)	AD1 (1100)	IR → MAR
0	1	X	X	X	AD1 (1100)	AD1 (1100)	MAR → Mem, Read,
0	0	X	X	X	AD1 (1100)	AD2 (1101)	Request, Mem → MBR
0	X	X	X	X	AD2 (1101)	IF0 (0001)	MBR + AC → AC
0	X	X	X	0	BR0 (1110)	IF0 (0001)	
0	X	X	X	1	BR0 (1110)	BR1 (1111)	
0	X	X	X	X	BR1 (1111)	IF0 (0001)	IR → PC

Synchronous Mealy Machines

Case I: Synchronizers at Inputs and Outputs

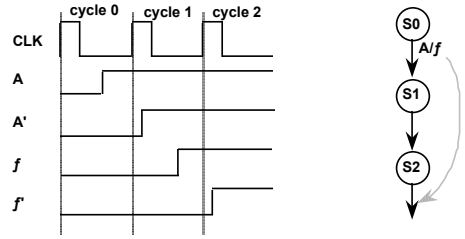

A asserted in Cycle 0, *f* becomes asserted after 2 cycle delay!

This is clearly overkill!

State Transition Table

- Observations:
  - Extensive use of Don't Cares
  - Inputs used only in a small number of state e.g., AC<15> examined only in BR0 state IR<15:14> examined only in OD state
- Some outputs always asserted in a group
- ROM-based implementations cannot take advantage of don't cares
- However, ROM-based implementation can skip state assignment step

Synchronous Mealy Machine

Case II: Synchronizers on Inputs

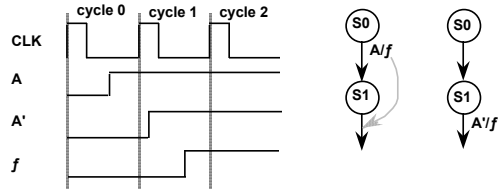

A asserted in Cycle 0, *f* follows in next cycle

Same as using delayed signal (A') in Cycle 1!

Synchronous Mealy Machines

Case III: Synchronized Outputs

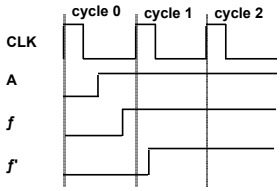

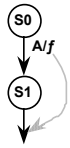

A asserted during Cycle 0, f' asserted in next cycle

Effect of f delayed one cycle

Synchronous Mealy Machines

- Implications for Processor FSM Already Derived
- Consider inputs: Reset, Wait, IR<15:14>, AC<15>
  - Latter two already come from registers, and are sync'd to clock
  - Possible to load IR with new instruction in one state & perform multiway branch on opcode in next state
  - Best solution for Reset and Wait: synchronized inputs
    - Place D flipflops between these external signals and the
    - control inputs to the processor FSM
    - Sync'd versions of Reset and Wait delayed by one clock cycle

Time State Divide and Conquer

- Overview
  - Classical Approach: Monolithic Implementations
  - Alternative "Divide & Conquer" Approach:
    - Decompose FSM into several simpler communicating FSMs
    - Time state FSM (e.g., IFetch, Decode, Execute)
    - Instruction state FSM (e.g., LD, ST, ADD, BRN)
    - Condition state FSM (e.g., AC < 0, AC ≠ 0)

Time State (Divide & Conquer)

Time State FSM

Most instructions follow same basic sequence

Differ only in detailed execution sequence

Time State FSM can be parameterized by opcode and AC states

Instruction State: stored in IR<15:14>

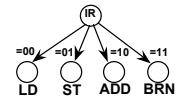

Condition State: stored in AC<15>

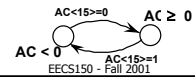

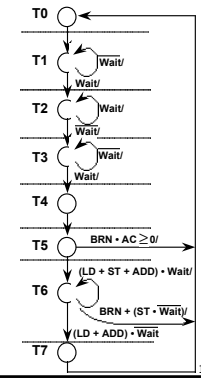

Time State (Divide & Conquer)

Generation of Microoperations

0 → PC: Reset
PC + 1 → PC: T0
PC → MAR: T0
MAR → Memory Address Bus: T2 + T6 • (LD + ST + ADD)
Memory Data Bus → MBR: T2 + T6 • (LD + ADD)
MBR → Memory Data Bus: T6 • ST
MBR → IR: T4
MBR → AC: T7 • LD
AC → MBR: T5 • ST
AC + MBR → AC: T7 • ADD
IR<13:0> → MAR: T5 • (LD + ST + ADD)
IR<13:0> → PC: T6 • BRN
1 → Read/Write: T2 + T6 • (LD + ADD)
0 → Read/Write: T6 • ST
1 → Request: T2 + T6 • (LD + ST + ADD)

Jump Counter

Concept

Implement FSM using MSI functionality: counters, mux, decoders

Pure jump counter: only one of four possible next states

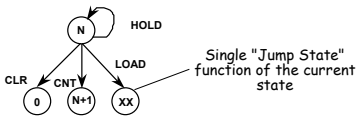

Hybrid jump counter:

Multiple "Jump States" — function of current state + inputs

Jump Counters

Pure Jump Counter

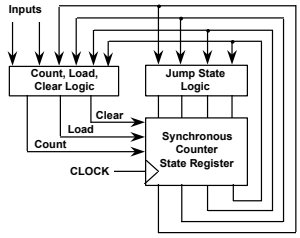

NOTE: No inputs to jump state logic

Logic blocks implemented via discrete logic, PALs/PLAs, ROMs

Jump Counters

Problem with Pure Jump Counter

Difficult to implement multi-way branches

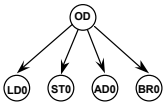

Logical State Diagram

Extra States:

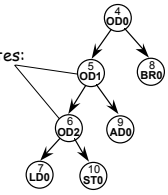

Pure Jump Counter State Diagram

Jump Counters

Hybrid Jump Counter

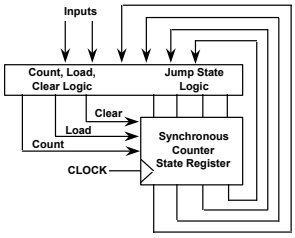

Load inputs are function of state and FSM inputs

Jump Counters

Implementation Example

State assignment attempts to take advantage of sequential states

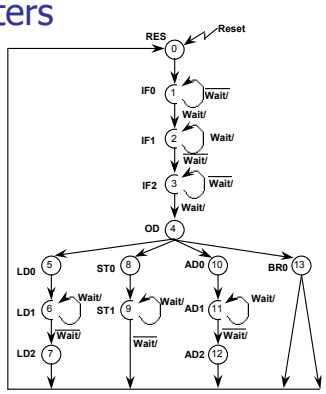

Jump Counters

Implementation Example, Continued

$CNT = (s0 + s5 + s8 + s10) + Wait \cdot (s1 + s3) + \overline{Wait} \cdot (s2 + s6 + s9 + s11)$

$\overline{CNT} = \overline{Wait} \cdot (s1 + s3) + Wait \cdot (s2 + s6 + s9 + s11)$

$CLR = Reset + s7 + s12 + s13 + (s9 \cdot \overline{Wait})$

$\overline{CLR} = \overline{Reset} \cdot \overline{s7} \cdot \overline{s12} \cdot \overline{s13} \cdot (\overline{s9} + Wait)$

$LD = s4$

Contents of Jump State ROM

Address	*Contents (Symbolic State)*
00	0101 (LD0)
01	1000 (ST0)
10	1010 (AD0)
11	1101 (BR0)

Jump Counters

Implementation Example, continued

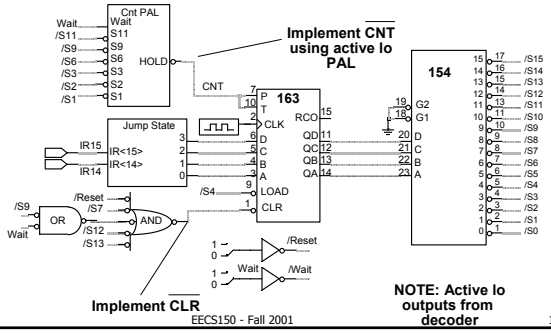

Jump Counter

CLR, CNT, LD implemented via Mux Logic

CLR = CLRm + Reset

$\overline{CLR} = \overline{CLRm} + \overline{Reset}$

Active Lo outputs: **hi input inverted at the output**

Note that CNT is active hi on counter so invert MUX inputs!

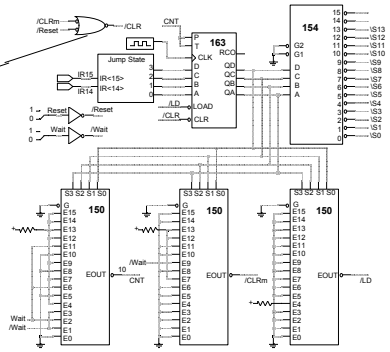

Jump Counters

Microoperation implementation

0 → PC = Reset
PC + 1 → PC = S0
PC → MAR = S0
MAR → Memory Address Bus =
Wait•(S1 + S2 + S5 + S6 + S8 + S9 + S11 + S12)
Memory Data Bus → MBR = Wait•(S2 + S6 + S11)
MBR → Memory Data Bus = Wait•(S8 + S9)
MBR → IR = Wait•S3
MBR → AC = Wait•S7
AC → MBR = IR15•IR14•S4
AC + MBR → AC = Wait•S12
IR<13:0> → MAR = (IR15•IR14 + IR15•IR14 + IR15•IR14)•S4
IR<13:0> → PC = AC15•S13
1 → Read/Write = Wait•(S1 + S2 + S5 + S6 + S11 + S12)
0 → Read/Write = Wait•(S8 + S9)
1 → Request = Wait•(S1 + S2 + S5 + S6 + S8 + S9 + S11 + S12)

Jump Counters: CNT, CLR, LD function of current state + Wait
Why not store these as outputs of the Jump State ROM?
Make Wait and Current State part of ROM address
32 x as many words, 7 bits wide

Branch Sequencers

Concept

Implement Next State Logic via ROM

Address ROM with current state and inputs

Problem: ROM doubles in size for each additional input

Note: Jump counter trades off ROM size vs. external logic
Only jump states kept in ROM
Even in hybrid approach, state + input subset form ROM address

Branch Sequencer: between the extremes
Next State stored in ROM
Each state limited to small number of next states
Always a power of 2

Observe: only a small set of inputs are examined in any state

Branch Sequencers

4 Way Branch Sequencer

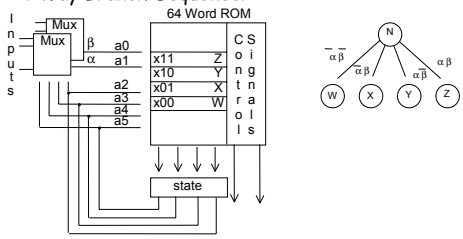

Current State selects two inputs to form part of ROM address

These select one of four possible next states (and output sets)

Every state has exactly four possible next states

Branch Sequencer

Processor CPU Design Example

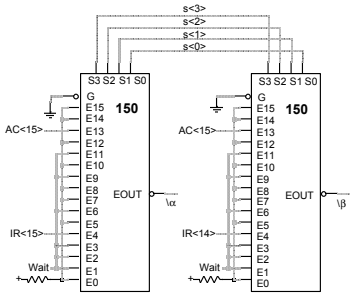

Alpha, Beta multiplexer input setup

Example Processor FSM

ROM ADDRESS	(Reset,	Current State,	a, b)	ROM CONTENTS Next State	Register Transfer Operations
RES	0	0000	X X	0001 (IF0)	PC → MAR, PC + 1 → PC
IF0	0	0001	0 0	0001 (IF0)	
	0	0001	1 1	0010 (IF1)	MAR → Mem, Read, Request
IF1	0	0010	0 0	0011 (IF2)	MAR → Mem, Read, Request
	0	0010	1 1	0010 (IF1)	Mem → MBR
IF2	0	0011	0 0	0011 (IF2)	
	0	0011	1 1	0100 (OD)	MBR → IR
OD	0	0100	0 0	0101 (LD0)	IR → MAR
	0	0100	0 1	1000 (ST0)	IR → MAR, AC → MBR
	0	0100	1 0	1001 (AD0)	IR → MAR
	0	0100	1 1	1101 (BR0)	IR → MAR
LD0	0	0101	X X	0110 (LD1)	MAR → Mem, Read, Request
LD1	0	0110	0 0	0111 (LD2)	Mem → MBR
	0	0110	1 1	0110 (LD1)	MAR → Mem, Read, Request
LD2	0	0111	X X	0000 (RES)	MBR → AC
ST0	0	1000	X X	1001 (ST1)	MAR → Mem, Write, Request, MBR → Mem
ST1	0	1001	0 0	0000 (RES)	
	0	1001	1 1	1001 (ST1)	MAR → Mem, Write, Request, MBR → Mem
AD0	0	1010	X X	1011 (AD1)	MAR → Mem, Read, Request
AD1	0	1011	0 0	1100 (AD2)	
	0	1011	1 1	1011 (AD1)	MAR → Mem, Read, Request
AD2	0	1100	X X	0000 (RES)	MBR + AC → AC
BR0	0	1101	0 0	0000 (RES)	
	0	1101	1 1	0000 (RES)	IR → PC

Branch Sequencers

Alternative Horizontal Implementation

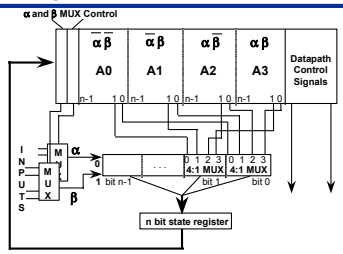

Input MUX controlled by encoded signals, not state
Much fewer inputs than unique states!
In example FSM, input MUX can be 2:1!

Adding length to ROM word saves on bits vs. doubling words
Vertical format: (14 + 4) x 64 = 1152 ROM bits
Horizontal format: (14 + 4 x 4 + 2) x 16 = 512 ROM bits

Microprogramming

How to organize the control signals

Implement control signals by storing 1's and 0's in a ROM

Horizontal vs. vertical microprogramming

Horizontal: 1 ROM output for each control signal

Vertical: encoded control signals in ROM, decoded externally
some mutually exclusive signals can be combined
helps reduce ROM length

Microprogramming

Register Transfer/Microoperations

14 Register Transfer operations become 22 Microoperations:

PC → ABUS
IR → ABUS
MBR → ABUS
RBUS → AC
AC → ALU A
MBUS → ALU B
ALU ADD
ALU PASS B
MAR → Address Bus
MBR → Data Bus
ABUS → IR
ABUS → MAR
Data Bus → MBR
RBUS → MBR
MBR → MBUS
0 → PC
PC + 1 → PC
ABUS → PC
Read/Write
Request
AC → RBUS
ALU Result → RBUS

Horizontal Microprogramming

Horizontal Branch Sequencer

α, β Mux bits
4 x 4 Next State bits
22 Control operation bits

40 bits total

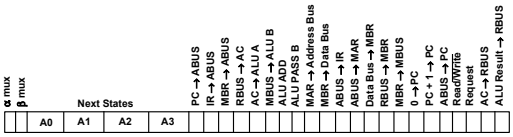

Horizontal Microprogramming

Moore Processor ROM

Current State (Address)	α mux	β mux	A0	A1	A2	A3	PC → ABUS	IR → ABUS	MBR → ABUS	RBUS → AC	AC → ALU A	MBUS → ALU B	ALU ADD	ALU PASS B	MAR → Address Bus	MBR → Data Bus	ABUS → IR	ABUS → MAR	Data Bus → MBR	RBUS → MBR	MBR → MBUS	0 → PC	PC + 1 → PC	ABUS → PC	Read/Write	Request	AC → RBUS	ALU Result → RBUS
RES (0000)	0	0	0001	0001	0001	0001	0	0	0	0	0	0	0	0	0	0	0	0	0	0	0	1	0	0	0	0	0	0
IF0 (0001)	0	0	0010	0010	0010	0010	1	0	0	0	0	0	0	0	0	0	0	1	0	0	0	0	1	0	0	0	0	0
IF1 (0010)	0	0	0010	0010	0011	0011	0	0	0	0	0	0	0	0	0	0	0	0	0	0	0	0	0	0	0	0	0	0
IF2 (0011)	0	0	0100	0100	0011	0011	0	0	0	0	0	0	0	0	1	0	0	0	1	0	0	0	0	0	0	1	1	0
IF3 (0100)	0	0	0100	0100	0101	0101	0	0	1	0	0	0	0	0	0	0	1	0	0	0	0	0	0	0	0	0	0	0
OD (0101)	1	1	0110	1001	1011	1110	0	0	0	0	0	0	0	0	0	0	0	0	0	0	0	0	0	0	0	0	0	0
LD0 (0110)	0	0	0111	0111	0111	0111	0	1	0	0	0	0	0	0	0	0	0	1	0	0	0	0	0	0	0	0	0	0
LD1 (0111)	0	0	1000	1000	0111	0111	0	0	0	0	0	0	0	1	0	0	0	0	1	0	0	0	0	0	0	1	1	0
LD2 (1000)	0	0	0001	0001	0001	0001	0	0	0	1	0	1	0	1	0	0	0	0	0	0	1	0	0	0	0	0	0	1
ST0 (1001)	0	0	1010	1010	1010	1010	0	1	0	0	0	0	0	0	0	0	0	1	0	1	0	0	0	0	0	0	1	0
ST1 (1010)	0	0	0001	0001	1010	1010	0	0	0	0	0	0	0	1	1	0	0	0	0	0	0	0	0	0	0	1	0	0
AD0 (1011)	0	0	1100	1100	1100	1100	0	1	0	0	0	0	0	0	0	0	0	1	0	0	0	0	0	0	0	0	0	0
AD1 (1100)	0	0	1101	1101	1100	1100	0	0	0	0	0	0	0	1	0	0	0	1	0	0	0	0	0	0	1	1	0	0
AD2 (1101)	0	0	0001	0001	0001	0001	0	0	0	1	1	1	0	0	0	0	0	0	0	0	1	0	0	0	0	0	0	1
BR0 (1110)	0	1	0001	1111	0001	1111	0	0	0	0	0	0	0	0	0	0	0	0	0	0	0	0	0	0	0	0	0	0
BR1 (1111)	0	0	0001	0001	0001	0001	0	1	0	0	0	0	0	0	0	0	0	0	0	0	0	0	1	0	0	0	0	0

Alpha inputs: 0 = Wait, 1 = IR<15>
Beta inputs: 0 = AC<15>, 1 = IR<14>

Horizontal Microprogramming

Advantages:
most flexibility -- complete parallel access to datapath control points

Disadvantages:
very long control words -- 100+ bits for real processors

NOTE: Not all microoperation combinations make sense!

Output Encodings:

Group mutually exclusive signals
Use external logic to decode

Example:

0 → PC, PC + 1 → PC, ABUS → PC mutually exclusive

Save ROM bit with external 2:4 Decoder

Horizontal Microprogramming

Partially Encoded Control Outputs

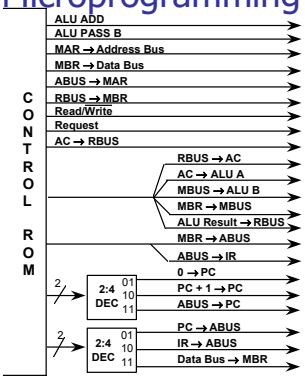

Vertical Microprogramming

More extensive encoding to reduce ROM word length

- Typically use multiple microword formats:
  - Horizontal microcode -- next state + control bits in same word
  - Separate formats for control outputs and "branch jumps"
  - may require several microwords in a sequence to implement same function as single horizontal word
- In the extreme, very much like assembly language programming

Vertical Microprogramming

Branch Jump
Compare indicated signal to 0 or 1

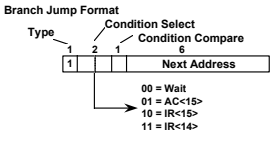

Register Transfer
Source, Destination, Operation

10 ROM Bits

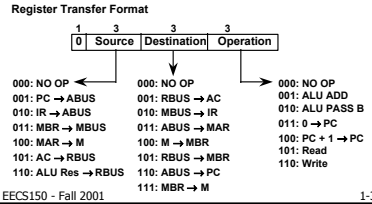

Vertical Microprogramming

ROM ADDRESS	SYMBOLIC CONTENTS		BINARY CONTENTS	
000000	RES	RT PC → MAR, PC +1 → PC	0	001 011 100
000001	IF0	RT MAR → M, Read	0	100 000 101
000010		BJ Wait=0, IF0	1	000 000 001
000011	IF1	RT MAR → M, M → MBR, Read	0	100 100 101
000100		BJ Wait=1, IF1	1	001 000 011
000101	IF2	RT MBR → IR	0	011 010 000
000110		BJ Wait=0, IF2	1	000 000 101
000111		RT IR → MAR	0	010 011 000
001000	OD	BJ IR<15>=1, OD1	1	101 010 101
001001		BJ IR<14>=1, ST0	1	111 010 000
001010	LD0	RT MAR → M, Read	0	100 000 101
001011	LD1	RT MAR → M, M → MBR, Read	0	100 100 101
001100		BJ Wait=1, LD1	1	001 001 011
001101	LD2	RT MBR → AC	0	110 001 010
001110		BJ Wait=0, RES	1	000 000 000
001111		BJ Wait=1, RES	1	001 000 000

Vertical Microprogramming

ROM ADDRESS	SYMBOLIC CONTENTS		BINARY CONTENTS	
010000	ST0	RT AC → MBR	0	101 101 000
010001		RT MAR → M, MBR → M, Write	0	100 111 110
010010	ST1	RT MAR → M, MBR → M, Write	0	100 111 110
010011		BJ Wait=0, RES	1	000 000 000
010100		BJ Wait=1, ST1	1	001 010 010
010101	OD1	BJ IR<14>=1, BR0	1	111 011 101
010110	AD0	RT MAR → M, Read	0	100 000 101
010111	AD1	RT MAR → M, M → MBR, Read	0	100 100 101
011000		BJ Wait=1, AD1	1	001 010 111
011001	AD2	RT AC + MBR → AC	0	110 001 001
011010		BJ Wait=0, RES	1	000 000 000
011011		BJ Wait=1, RES	1	000 000 000
011100	BR0	BJ AC<15>=0, RES	1	010 000 000
011101		RT IR → PC	0	010 110 000
011110		BJ AC<15>=1, RES	1	011 000 000

31 words x 10 ROM bits = 310 bits total *versus* 16 x 38 = 608 bits horizontal

Vertical Programming

Controller Block Diagram

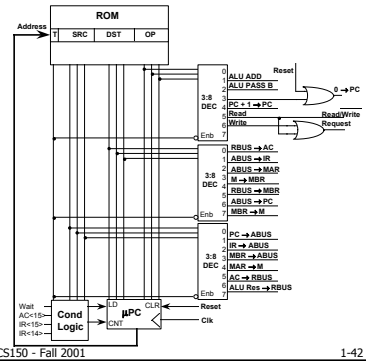

Vertical Microprogramming

Condition Logic

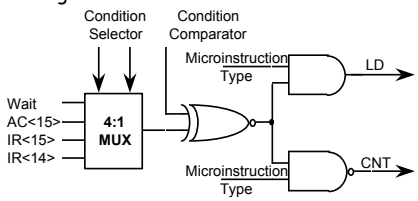

Vertical Microprogramming

- Writeable Control Store
  - Part of control store addresses map into RAM
    - Allows assembly language programmer to implement own instructions
    - Extend "native" instruction set with application specific instructions
    - Requires considerable sophistication to write microcode
    - Not a popular approach with today's processors
  - Make the native instruction set simple and fast
  - Write "higher level" functions as assembly language sequences