CS162
Operating Systems and Systems Programming
Lecture 10

Scheduling

February 24th, 2016

Prof. Anthony D. Joseph

http://cs162.eecs.Berkeley.edu

Recall: Scheduling Policy Goals/Criteria

- Minimize Response Time
  - Minimize elapsed time to do an operation (or job)
  - Response time is what the user sees:
    - » Time to echo a keystroke in editor
    - » Time to compile a program
    - » Real-time Tasks: Must meet deadlines imposed by World
- Maximize Throughput
  - Maximize operations (or jobs) per second
  - Throughput related to response time, but not identical:
    - » Minimizing response time will lead to more context switching than if you only maximized throughput
  - Two parts to maximizing throughput
    - » Minimize overhead (for example, context-switching)
    - » Efficient use of resources (CPU, disk, memory, etc)
- Fairness
  - Share CPU among users in some equitable way
  - Fairness is not minimizing average response time:
    - » Better *average* response time by making system *less* fair

Recall: First-Come, First-Served (FCFS) Scheduling

- First-Come, First-Served (FCFS)
  - Also "First In, First Out" (FIFO) or "Run until done"
    - » In early systems, FCFS meant one program scheduled until done (including I/O)
    - » Now, means keep CPU until thread blocks

- Example:

Process	Burst Time
P_1	24
P_2	3
P_3	3

  - Suppose processes arrive in the order: P_1 , P_2 , P_3
    The Gantt Chart for the schedule is:

  - Waiting time for P_1 = 0; P_2 = 24; P_3 = 27
  - Average waiting time: (0 + 24 + 27)/3 = 17
  - Average Completion time: (24 + 27 + 30)/3 = 27
- *Convoy effect:* short process behind long process

Recall: FCFS Scheduling (Cont.)

- Example continued:
  - Suppose that processes arrive in order: P_2 , P_3 , P_1
    Now, the Gantt chart for the schedule is:

  - Waiting time for P_1 = 6; P_2 = 0, P_3 = 3
  - Average waiting time: (6 + 0 + 3)/3 = 3
  - Average Completion time: (3 + 6 + 30)/3 = 13
- In second case:
  - average waiting time is much better (before it was 17)
  - Average completion time is better (before it was 27)
- FIFO Pros and Cons:
  - Simple (+)
  - Short jobs get stuck behind long ones (-)
    - » Safeway: Getting milk, always stuck behind cart full of small items. Upside: get to read about space aliens!

Round Robin (RR)

- FCFS Scheme: Potentially bad for short jobs!
  - Depends on submit order
  - If you are first in line at supermarket with milk, you don't care who is behind you, on the other hand…
- Round Robin Scheme
  - Each process gets a small unit of CPU time (*time quantum*), usually 10-100 milliseconds
  - After quantum expires, the process is preempted and added to the end of the ready queue.
  - *n* processes in ready queue and time quantum is *q* ⇒
    - » Each process gets 1/*n* of the CPU time
    - » In chunks of at most *q* time units
    - » No process waits more than (*n*-1)*q* time units
- Performance
  - *q* large ⇒ FCFS
  - *q* small ⇒ Interleaved (really small ⇒ hyperthreading?)
  - *q* must be large with respect to context switch, otherwise overhead is too high (all overhead)

Example of RR with Time Quantum = 20

- Example:

Process	Burst Time
P_1	53
P_2	8
P_3	68
P_4	24

  - The Gantt chart is:

P_1	P_2	P_3	P_4	P_1	P_3	P_4	P_1	P_3	P_3

0 20 28 48 68 88 108 112 125 145 153

  - Waiting time for
    P_1=(68-20)+(112-88)=72
    P_2=(20-0)=20
    P_3=(28-0)+(88-48)+(125-108)=85
    P_4=(48-0)+(108-68)=88
  - Average waiting time = (72+20+85+88)/4=66¼
  - Average completion time = (125+28+153+112)/4 = 104½
- Thus, Round-Robin Pros and Cons:
  - Better for short jobs, Fair (+)
  - Context-switching time adds up for long jobs (-)

Round-Robin Discussion

- How do you choose time slice?
  - What if too big?
    - » Response time suffers
  - What if infinite (∞)?
    - » Get back FIFO
  - What if time slice too small?
    - » Throughput suffers!

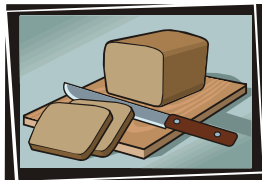

- Actual choices of timeslice:
  - Initially, UNIX timeslice one second:
    - » Worked ok when UNIX was used by one or two people.
    - » What if three compilations going on? 3 seconds to echo each keystroke!
  - In practice, need to balance short-job performance and long-job throughput:
    - » Typical time slice today is between 10ms – 100ms
    - » Typical context-switching overhead is 0.1ms – 1ms
    - » Roughly 1% overhead due to context-switching

Comparisons between FCFS and Round Robin

- Assuming zero-cost context-switching time, is RR always better than FCFS?
- Simple example:

10 jobs, each take 100s of CPU time
RR scheduler quantum of 1s
All jobs start at the same time

- Completion Times:

Job #	FIFO	RR
1	100	991
2	200	992
…	…	…
9	900	999
10	1000	1000

  - Both RR and FCFS finish at the same time
  - Average response time is much worse under RR!
    - » Bad when all jobs same length
- Also: Cache state must be shared between all jobs with RR but can be devoted to each job with FIFO
  - Total time for RR longer even for zero-cost switch!

Earlier Example with Different Time Quantum

Best FCFS:

P_2 [8]	P_4 [24]	P_1 [53]	P_3 [68]

0 8 32 85 153

	Quantum	P_1	P_2	P_3	P_4	Average
Wait Time	Best FCFS	32	0	85	8	31¼
	Q = 1	84	22	85	57	62
	Q = 5	82	20	85	58	61¼
	Q = 8	80	8	85	56	57¼
	Q = 10	82	10	85	68	61¼
	Q = 20	72	20	85	88	66¼
	Worst FCFS	68	145	0	121	83½
Completion Time	Best FCFS	85	8	153	32	69½
	Q = 1	137	30	153	81	100½
	Q = 5	135	28	153	82	99½
	Q = 8	133	16	153	80	95½
	Q = 10	135	18	153	92	99½
	Q = 20	125	28	153	112	104½
	Worst FCFS	121	153	68	145	121¾

Handling Differences in Importance: Strict Priority Scheduling

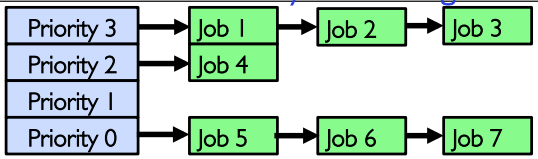

- Execution Plan
  - Always execute highest-priority runable jobs to completion
  - Each queue can be processed in Round-Robin fashion with some time-quantum
- Problems:
  - Starvation:
    - » Lower priority jobs don't get to run because higher priority tasks always running
  - Deadlock: Priority Inversion
    - » Not strictly a problem with priority scheduling, but happens when low priority task has lock needed by high-priority task
    - » Usually involves third, intermediate priority task that keeps running even though high-priority task should be running
- How to fix problems?
  - Dynamic priorities – adjust base-level priority up or down based on heuristics about interactivity, locking, burst behavior, etc…

Scheduling Fairness

- What about fairness?
  - Strict fixed-priority scheduling between queues is unfair (run highest, then next, etc):
    - » long running jobs may never get CPU
    - » In Multics, shut down machine, found 10-year-old job
  - Must give long-running jobs a fraction of the CPU even when there are shorter jobs to run
  - Tradeoff: fairness gained by hurting avg response time!
- How to implement fairness?
  - Could give each queue some fraction of the CPU
    - » What if one long-running job and 100 short-running ones?
    - » Like express lanes in a supermarket—sometimes express lanes get so long, get better service by going into one of the other lines
  - Could increase priority of jobs that don't get service
    - » What is done in some variants of UNIX
    - » This is ad hoc—what rate should you increase priorities?
    - » And, as system gets overloaded, no job gets CPU time, so everyone increases in priority⇒Interactive jobs suffer

Administrivia

- Midterm coming up soon
  - Wednesday 3/9 6-7:30PM in 10 EVANS and 155 DWINELLE
  - Rooms assignment: aa-eh 10 Evans, ej-oa 155 Dwinelle
  - Closed book, no calculators, one double-side page of handwritten notes
  - No class that day, extra office hours
  - Review session TBA on Sat or Sun afternoon
- Topics will include the material through lecture 12 (Wed 3/2)
  - Includes lectures, project 1, homeworks, readings, textbook
- Apple Core OS Tech Talk Infosession next week
  - Tuesday, March 1 6:15 – 7:30PM in Woz Lounge

BREAK

Lottery Scheduling

- Yet another alternative: Lottery Scheduling
  - Give each job some number of lottery tickets
  - On each time slice, randomly pick a winning ticket
  - On average, CPU time is proportional to number of tickets given to each job
- How to assign tickets?
  - To approximate SRTF, short running jobs get more, long running jobs get fewer
  - To avoid starvation, every job gets at least one ticket (everyone makes progress)
- Advantage over strict priority scheduling: behaves gracefully as load changes
  - Adding or deleting a job affects all jobs proportionally, independent of how many tickets each job possesses

Lottery Scheduling Example

- Lottery Scheduling Example
  - Assume short jobs get 10 tickets, long jobs get 1 ticket

# short jobs/ # long jobs	% of CPU each short jobs gets	% of CPU each long jobs gets
1/1	91%	9%
0/2	N/A	50%
2/0	50%	N/A
10/1	9.9%	0.99%
1/10	50%	5%

  - What if too many short jobs to give reasonable response time?
    - » If load average is 100, hard to make progress
    - » One approach: log some user out

How to Evaluate a Scheduling algorithm?

- Deterministic modeling
  - takes a predetermined workload and compute the performance of each algorithm for that workload
- Queueing models
  - Mathematical approach for handling stochastic workloads
- Implementation/Simulation:
  - Build system which allows actual algorithms to be run against actual data. Most flexible/general.

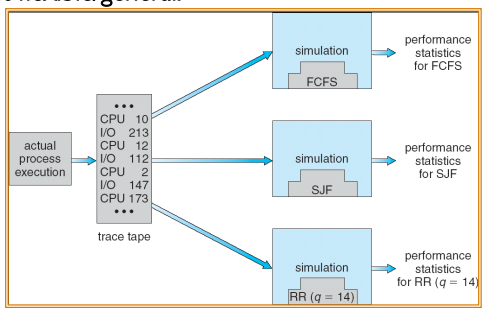

Recall: Assumption – CPU Bursts

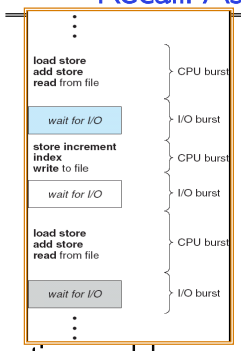

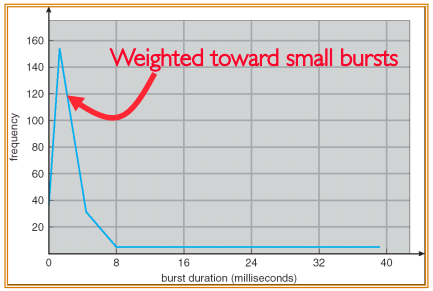

- Execution model: programs alternate between bursts of CPU and I/O
  - Program typically uses the CPU for some period of time, then does I/O, then uses CPU again
  - Each scheduling decision is about which job to give to the CPU for use by its next CPU burst
  - With timeslicing, thread may be forced to give up CPU before finishing current CPU burst

How to Handle Simultaneous Mix of Diff Types of Apps?

- Can we use Burst Time (observed) to decide which application gets CPU time?
- Consider mix of *interactive* and *high throughput* apps:
  - How to best schedule them?
  - How to recognize one from the other?
    - » Do you trust app to say that it is "interactive"?
  - Should you schedule the set of apps identically on servers, workstations, pads, and cellphones?
- Assumptions encoded into many schedulers:
  - Apps that sleep a lot and have short bursts must be interactive apps – they should get high priority
  - Apps that compute a lot should get low(er?) priority, since they won't notice intermittent bursts from interactive apps
- Hard to characterize apps:
  - What about apps that sleep for a long time, but then compute for a long time?
  - Or, what about apps that must run under all circumstances (say periodically)

What if we Knew the Future?

- Could we always mirror best FCFS?
- Shortest Job First (SJF):
  - Run whatever job has the least amount of computation to do
  - Sometimes called "Shortest Time to Completion First" (STCF)
- Shortest Remaining Time First (SRTF):
  - Preemptive version of SJF: if job arrives and has a shorter time to completion than the remaining time on the current job, immediately preempt CPU
  - Sometimes called "Shortest Remaining Time to Completion First" (SRTCF)
- These can be applied either to a whole program or the current CPU burst of each program
  - Idea is to get short jobs out of the system
  - Big effect on short jobs, only small effect on long ones
  - Result is better average response time

Discussion

- SJF/SRTF are the best you can do at minimizing average response time
  - Provably optimal (SJF among non-preemptive, SRTF among preemptive)
  - Since SRTF is always at least as good as SJF, focus on SRTF
- Comparison of SRTF with FCFS and RR
  - What if all jobs the same length?
    - » SRTF becomes the same as FCFS (i.e. FCFS is best can do if all jobs the same length)
  - What if jobs have varying length?
    - » SRTF (and RR): short jobs not stuck behind long ones

Example to illustrate benefits of SRTF

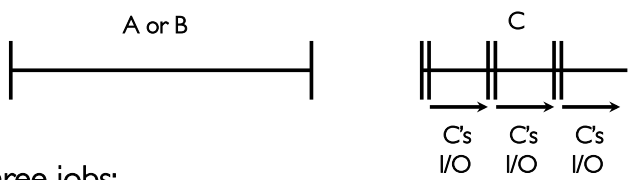

- Three jobs:
  - A,B: both CPU bound, run for week
    C: I/O bound, loop 1ms CPU, 9ms disk I/O
  - If only one at a time, C uses 90% of the disk, A or B could use 100% of the CPU
- With FIFO:
  - Once A or B get in, keep CPU for two weeks
- What about RR or SRTF?
  - Easier to see with a timeline

SRTF Example continued:

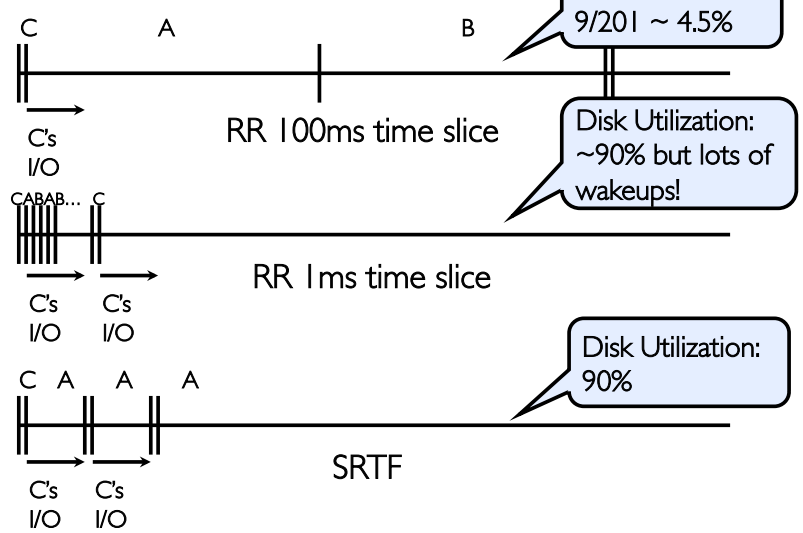

SRTF Further discussion

- Starvation
  - SRTF can lead to starvation if many small jobs!
  - Large jobs never get to run
- Somehow need to predict future
  - How can we do this?
  - Some systems ask the user
    - » When you submit a job, have to say how long it will take
    - » To stop cheating, system kills job if takes too long
  - But: Even non-malicious users have trouble predicting runtime of their jobs
- Bottom line, can't really know how long job will take
  - However, can use SRTF as a yardstick for measuring other policies
  - Optimal, so can't do any better
- SRTF Pros & Cons
  - Optimal (average response time) (+)
  - Hard to predict future (-)
  - Unfair (-)

Predicting the Length of the Next CPU Burst

- Adaptive: Changing policy based on past behavior
  - CPU scheduling, in virtual memory, in file systems, etc
  - Works because programs have predictable behavior
    - » If program was I/O bound in past, likely in future
    - » If computer behavior were random, wouldn't help
- Example: SRTF with estimated burst length
  - Use an estimator function on previous bursts:
    Let t_{n-1}, t_{n-2}, t_{n-3}, etc. be previous CPU burst lengths. Estimate next burst $\tau_n = f(t_{n-1}, t_{n-2}, t_{n-3}, \ldots)$
  - Function f could be one of many different time series estimation schemes (Kalman filters, etc)
  - For instance,
    exponential averaging
    $\tau_n = \alpha t_{n-1} + (1-\alpha)\tau_{n-1}$
    with $(0<\alpha\leq 1)$

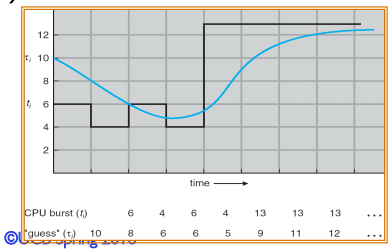

Multi-Level Feedback Scheduling

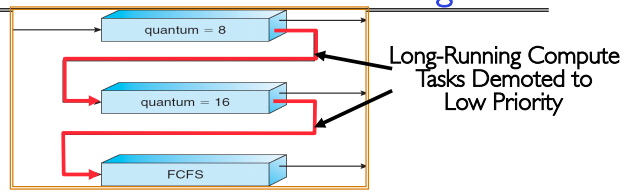

- Another method for exploiting past behavior
  - First used in CTSS
  - Multiple queues, each with different priority
    - » Higher priority queues often considered "foreground" tasks
  - Each queue has its own scheduling algorithm
    - » e.g. foreground – RR, background – FCFS
    - » Sometimes multiple RR priorities with quantum increasing exponentially (highest:1ms, next:2ms, next: 4ms, etc)
- Adjust each job's priority as follows (details vary)
  - Job starts in highest priority queue
  - If timeout expires, drop one level
  - If timeout doesn't expire, push up one level (or to top)

Scheduling Details

- Result approximates SRTF:
  - CPU bound jobs drop like a rock
  - Short-running I/O bound jobs stay near top
- Scheduling must be done between the queues
  - Fixed priority scheduling:
    - » serve all from highest priority, then next priority, etc.
  - Time slice:
    - » each queue gets a certain amount of CPU time
    - » e.g., 70% to highest, 20% next, 10% lowest
- Countermeasure: user action that can foil intent of the OS designer
  - For multilevel feedback, put in a bunch of meaningless I/O to keep job's priority high
  - Of course, if everyone did this, wouldn't work!
- Example of Othello program:
  - Playing against competitor, so key was to do computing at higher priority the competitors.
    - » Put in printf's, ran much faster!

BREAK

Case Study: Linux O(1) Scheduler

- Priority-based scheduler: 140 priorities
  - 40 for "user tasks" (set by "nice"), 100 for "Realtime/Kernel"
  - Lower priority value ⇒ higher priority (for nice values)
  - Highest priority value ⇒ Lower priority (for realtime values)
  - All algorithms O(1) – schedule n processes in constant time
    - » Compute timeslices/priorities/interactivity credits when job finishes time slice
    - » 140-bit bit mask indicates presence or absence of job(s) at given priority level
- Two separate priority queues (arrays): "active" and "expired"
  - All tasks in the active queue use up their timeslices and get placed on the expired queue, after which queues swapped
- Timeslice depends on priority – linearly mapped onto timeslice range
  - Like multi-level queue (1 queue per priority) with diff timeslice at each level
  - Execution split into "Timeslice Granularity" chunks – RR through priority

O(1) Scheduler Continued

- Heuristics
  - User-task priority adjusted ±5 based on heuristics
    - » p->sleep_avg = sleep_time – run_time
    - » Higher sleep_avg ⇒ more I/O bound the task, more reward (and vice versa)
  - Interactive Credit
    - » Earned when task sleeps for "long" time, Spend when task runs for "long" time
    - » IC is used to provide hysteresis to avoid changing interactivity for temporary changes in behavior
  - However, "interactive tasks" get special dispensation
    - » To try to maintain interactivity
    - » Placed back into active queue, unless another task has starved for too long…
- Real-Time Tasks
  - Always preempt non-RT tasks and no dynamic adjustment of priorities
  - Scheduling schemes:
    - » SCHED_FIFO: preempts other tasks, no timeslice limit
    - » SCHED_RR: preempts normal tasks, RR scheduling amongst tasks of same priority

Linux Completely Fair Scheduler (CFS)

- First appeared in 2.6.23, modified in 2.6.24
  - "CFS doesn't track sleeping time and doesn't use heuristics to identify interactive tasks—it just makes sure every process gets a fair share of CPU within a set amount of time given the number of runnable processes on the CPU."
- Inspired by Networking "Fair Queuing"
  - Each process given their fair share of resources
  - Models an "ideal multitasking processor" in which N processes execute simultaneously as if they truly got 1/N of the processor
    - » Tries to give each process an equal fraction of the processor
  - Priorities reflected by weights such that increasing a task's priority by 1 always gives the same fractional increase in CPU time – regardless of current priority

CFS (Continued)

- Idea: track "virtual time" received by each process when it is running
  - Take real execution time, scale by weighting factor
    - » Lower priority ⇒ real time divided by greater weight
    - » Actually – multiply by sum of all weights/current weight
  - Keep virtual time advancing at same rate
- Targeted latency (T_L): period of time after which all processes get to run at least a little
  - Each process runs with quantum $(w_p / \Sigma w_i)$
  - Never smaller than "minimum granularity"
- Red-Black tree holds all runnable processes sorted on *vruntime*
  - O(log n) time to perform insertions/deletions
    - » Cache the item at far left (item with earliest *vruntime*)
  - Scheduler always takes process with smallest *vruntime* (far left item)

CFS Examples

- Suppose Targeted latency = 20ms and Minimum Granularity = 1ms
- Two CPU bound tasks with same priorities
  - Both switch with 10ms
- Two CPU bound tasks separated by nice value of 5
  - One task gets 5ms, another gets 15ms
- 40 tasks: each gets 1ms (no longer totally fair – miss target latency)
- One CPU bound task, one interactive task same priority
  - While interact task sleeps, CPU bound task runs, increments vruntime
  - When interact task wakes up, runs immediately (it's behind on vruntime)
- Group scheduling facilities (2.6.24)
  - Can give fair fractions to groups (user or other process group)
  - So, two users, one starts 1 process, other starts 40, each gets 50% CPU

Real-Time Scheduling (RTS)

- Efficiency is important but predictability is essential:
  - We need to predict with confidence worst case response times for systems
  - In RTS, performance guarantees are:
    - » Task- and/or class centric and often ensured a priori
  - In conventional systems, performance is:
    - » System/throughput oriented with post-processing (… wait and see …)
  - Real-time is about enforcing predictability, and does not equal fast computing!!!
- Hard Real-Time
  - *Attempt to meet all deadlines*
  - EDF (Earliest Deadline First), LLF (Least Laxity First), RMS (Rate-Monotonic Scheduling), DM (Deadline Monotonic Scheduling)
- Soft Real-Time
  - *Attempt to meet deadlines with high probability*
  - Minimize miss ratio / maximize completion ratio (firm real-time)
  - Important for multimedia applications
  - CBS (Constant Bandwidth Server)

Summary

- Round-Robin Scheduling:
  - Give each thread a small amount of CPU time when it executes; cycle between all ready threads
  - Pros: Better for short jobs
- Shortest Job First (SJF)/Shortest Remaining Time First (SRTF):
  - Run whatever job has the least amount of computation to do/least remaining amount of computation to do
  - Pros: Optimal (average response time)
  - Cons: Hard to predict future, Unfair
- Multi-Level Feedback Scheduling:
  - Multiple queues of different priorities and scheduling algorithms
  - Automatic promotion/demotion of process priority in order to approximate SJF/SRTF
- Lottery Scheduling:
  - Give each thread a priority-dependent number of tokens (short tasks⇒more tokens)
- Linux CFS Scheduler: Fair fraction of CPU
  - Approximates a "ideal" multitasking processor
- Realtime Schedulers such as EDF
  - Guaranteed behavior by meeting deadlines
  - Realtime tasks defined by tuple of compute time and period
  - Schedulability test: is it possible to meet deadlines with proposed set of processes?

EDF: Schedulability Test

Theorem (Utilization-based Schedulability Test):

A task set $T_1, T_2, \ldots, T_n$ with $D_i = P_i$ is schedulable by the earliest deadline first (EDF) scheduling algorithm if

$$\sum_{i=1}^{n} \left(\frac{C_i}{D_i} \right) \leq 1$$

Exact schedulability test (necessary + sufficient)

Proof: [Liu and Layland, 1973]