inst.eecs.berkeley.edu/~cs61c

UCB CS61C : Machine Structures

Lecture 9 – Introduction to MIPS Procedures II, Logical Ops, & Instruction Format I

Instructor Paul Pearce

2010-07-06

APPLE ACKNOWLEDGES RECEPTION WOES

Apple announced that there is indeed a problem with iPhone reception, and that it's a software glitch reporting TOO MANY bars. Test your code!

`www.apple.com/pr/library/2010/07/02appleletter.html`

"And in Review…"

- In order to help the conditional branches make decisions concerning inequalities, we introduce a single instruction: "Set on Less Than" called **`slt, slti, sltu, sltiu`**
- Functions called with **`jal`**, return with **`jr $ra`**.
- The stack is your friend: Use it to save anything you need. Just leave it the way you found it!
- Instructions we know so far…
  - Arithmetic: **`add, addi, sub, addu, addiu, subu`**
  - Memory: **`lw, sw, lb, sb`**
  - Decision: **`beq, bne, slt, slti, sltu, sltiu`**
  - Unconditional Branches (Jumps): **`j, jal, jr`**
- Registers we know so far
  - All of them! Today we learn calling CONVENTIONS!

Register Conventions (1/4)

- CalleR: the calling function
- CalleE: the function being called
- When callee returns from executing, the caller needs to know which registers may have changed and which are guaranteed to be unchanged.
- Register Conventions: A set of generally accepted rules as to which registers will be unchanged after a procedure call (**`jal`**) and which may be changed.

Register Conventions (2/4) – saved

- **`$0`**: No Change. Always `0`.
- **`$s0-$s7`**: Restore if you change. Very important, that's why they're called saved registers. If the callee changes these in any way, it must restore the original values before returning.
- **`$sp`**: Restore if you change. The stack pointer must point to the same place before and after the `jal` call, or else the caller won't be able to restore values from the stack.
- HINT -- All saved registers start with S!

Register Conventions (3/4) – volatile

- **`$ra`**: Can Change. The **`jal`** call itself will change this register. Caller needs to save on stack if nested call.
- **`$v0-$v1`**: Can Change. These will contain the new returned values.
- **`$a0-$a3`**: Can change. These are volatile argument registers. Caller needs to save if they are needed after the call.
- **`$t0-$t9`**: Can change. That's why they're called temporary: any procedure may change them at any time. Caller needs to save if they'll need them afterwards.

Register Conventions (4/4)

- What do these conventions mean?
  - If function R calls function E, then function R must save any temporary registers that it may be using onto the stack before making a **`jal`** call.
  - Function E must save any S (saved) registers it intends to use before garbling up their values
- Remember: caller/callee need to save only temporary/saved registers they are using, not all registers.

Parents leaving for weekend analogy (1/5)

- Parents (`main`) leaving for weekend
- They (`caller`) give keys to the house to kid (`callee`) with the rules (`calling conventions`):
  - You can trash the temporary room(s), like the den and basement (`registers`) if you want, we don't care about it
  - BUT you'd better leave the rooms (`registers`) that we want to save for the guests untouched. "these rooms better look the same when we return!"
- Who hasn't heard this in their life?

Parents leaving for weekend analogy (2/5)

- Kid now "owns" rooms (`registers`)
- Kid wants to use the saved rooms for a wild, wild party (`computation`)
- What does kid (`callee`) do?
  - Kid takes what was in these rooms and puts them in the garage (`memory`)
  - Kid throws the party, trashes everything (except garage, who ever goes in there?)
  - Kid restores the rooms the parents wanted saved after the party by replacing the items from the garage (`memory`) back into those saved rooms

Parents leaving for weekend analogy (3/5)

- Same scenario, except before parents return and kid replaces saved rooms…
- Kid (`callee`) has left valuable stuff (`data`) all over.
  - Kid's friend (`another callee`) wants the house for a party when the kid is away
  - Kid knows that friend might trash the place destroying valuable stuff!
  - Kid remembers rule parents taught and now becomes the "heavy" (`caller`), instructing friend (`callee`) on good rules (`conventions`) of house.

Parents leaving for weekend analogy (4/5)

- If kid had data in temporary rooms (which were going to be trashed), there are three options:
  - Move items directly to garage (`memory`)
  - Move items to saved rooms whose contents have already been moved to the garage (`memory`)
  - Optimize lifestyle (`code`) so that the amount you've got to shlep stuff back and forth from garage (`memory`) is minimized.
    - Mantra: "Minimize register footprint"
- Otherwise: "Dude, where's my data?!"

Parents leaving for weekend analogy (5/5)

- Friend now "owns" rooms (`registers`)
- Friend wants to use the saved rooms for a wild, wild party (`computation`)
- What does friend (`callee`) do?
  - Friend takes what was in these rooms and puts them in the garage (`memory`)
  - Friend throws the party, trashes everything (except garage)
  - Friend restores the rooms the kid wanted saved after the party by replacing the items from the garage (`memory`) back into those saved rooms

Administrivia

- Homework 3 due tonight
- Start preparing for midterm!
  - Friday, July 16th. 9:30am-12:30pm. Room: 100 Lewis
- Interested in a review session later this week or early next week?
- First project over:
  - How'd it go?
- Reference slides
  - Don't forget about them!
- Anything else?

Bitwise Operations

- So far, we've done arithmetic (**`add, sub,addi`**), mem access (**`lw`** and **`sw`**), & branches and jumps.
- All of these instructions view contents of register as a single quantity (e.g., signed or unsigned int)
- New Perspective: View register as 32 raw bits rather than as a single 32-bit number
  - Since registers are composed of 32 bits, wish to access individual bits (or groups of bits) rather than the whole.
- Introduce two new classes of instructions
  - Logical & Shift Ops

Logical Operators (1/3)

- Two basic logical operators:
  - AND: outputs 1 only if all inputs are 1
  - OR: outputs 1 if at least one input is 1
- Truth Table: standard table listing all possible combinations of inputs and resultant output

A	B	A AND B	A OR B
0	0	0	0
0	1	0	1
1	0	0	1
1	1	1	1

Logical Operators (2/3)

- Logical Instruction Syntax:
  1 2,3,4
  - where
    1) operation name
    2) register that will receive value
    3) first operand (register)
    4) second operand (register) or immediate (numerical constant)
- In general, can define them to accept > 2 inputs, but in the case of MIPS assembly, these accept exactly 2 inputs and produce 1 output
  - Again, rigid syntax, simpler hardware

Logical Operators (3/3)

- Instruction Names:
  - **`and, or`**: Both of these expect the third argument to be a register
  - **`andi, ori`**: Both of these expect the third argument to be an immediate
- MIPS Logical Operators are all bitwise, meaning that bit 0 of the output is produced by the respective bit 0's of the inputs, bit 1 by the bit 1's, etc.
  - C: Bitwise AND is **`&`** (e.g., **`z = x & y;`**)
  - C: Bitwise OR is **`|`** (e.g., **`z = x | y;`**)

Uses for Logical Operators (1/3)

- Note that **`and`**ing a bit with **`0`** produces a **`0`** at the output while **`and`**ing a bit with **`1`** produces the original bit.
- This can be used to create a mask.
  - Example:

```
      1011 0110 1010 0100 0011 | 1101 1001 1010
mask: 0000 0000 0000 0000 0000 | 1111 1111 1111
```

  - The result of **`and`**ing these:

```
      0000 0000 0000 0000 0000 | 1101 1001 1010
                                 mask last 12 bits
```


Uses for Logical Operators (2/3)

- The second bitstring in the example is called a mask. It is used to isolate the rightmost 12 bits of the first bitstring by masking out the rest of the string (e.g. setting to all **`0`**s).
- Thus, the **`and`** operator can be used to set certain portions of a bitstring to **`0`**s, while leaving the rest alone.
  - In particular, if the first bitstring in the above example were in **`$t0`**, then the following instruction would mask it:

```
andi   $t0,$t0,0xFFF
```

Uses for Logical Operators (3/3)

- Similarly, note that **or**ing a bit with **1** produces a **1** at the output while `or`ing a bit with **0** produces the original bit.
- Often used to force certain bits to **1**s.
  - For example, if **$t0** contains **0x12345678**, then after this instruction:

    ori $t0, $t0, 0xFFFF

  … **$t0** will contain **0x1234FFFF**
    - (i.e., the high-order 16 bits are untouched, while the low-order 16 bits are forced to **1**s).

61C Levels of Representation (abstractions)

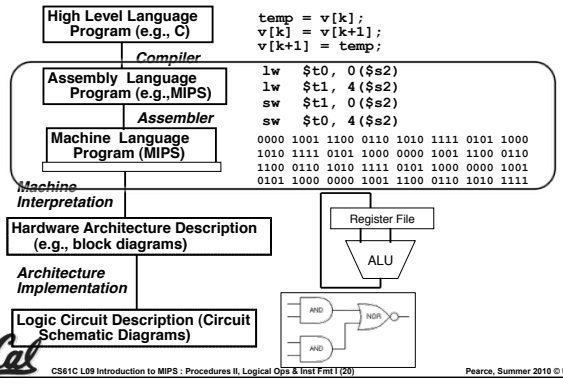

Overview – Instruction Representation

- Big idea: stored program
  - consequences of stored program
- Instructions as numbers
- Instruction encoding
- MIPS instruction format for Add instructions
- MIPS instruction format for Immediate, Data transfer instructions and jumps NEXT TIME

Big Idea: Stored-Program Concept

- Computers built on 2 key principles:
  - Instructions are represented as bit patterns - can think of these as numbers.
  - Therefore, entire programs can be stored in memory to be read or written just like data.
- Simplifies SW/HW of computer systems:
  - Memory technology for data also used for programs

Consequence #1: Everything Addressed

- Since all instructions and data are stored in memory, everything has a memory address: instructions, data words
  - both branches and jumps use these
- C pointers are just memory addresses: they can point to anything in memory
  - Unconstrained use of addresses can lead to nasty bugs; up to you in C; limits in Java
- One register keeps address of instruction being executed: **"Program Counter" (PC)**
  - Basically a pointer to memory: Intel calls it Instruction Address Pointer, a better name

Consequence #2: Everything Addressed

- Programs are distributed in binary form
  - Programs bound to specific instruction set
  - Different version for (old) Macintoshes and PCs
- New machines want to run old programs ("binaries") as well as programs compiled to new instructions
- Leads to "backward compatible" instruction set evolving over time
- Selection of Intel 8086 in 1981 for 1st IBM PC is major reason latest PCs still use 80x86 instruction set (Pentium 4); could still run program from 1981 PC today

Instructions as Numbers (1/2)

- Currently all data we work with is in words (32-bit blocks):
  - Each register is a word.
  - **`lw`** and **`sw`** both access memory one word at a time.
- So how do we represent instructions?
  - Remember: Computer only understands 1s and 0s, so "**`add $t0,$0,$0`**" is meaningless.
  - MIPS wants simplicity: since data is in words, make instructions be words too

Instructions as Numbers (2/2)

- One word is 32 bits, so divide instruction word into "fields".
- Each field tells processor something about instruction.
- We could define different fields for each instruction, but MIPS is based on simplicity, so define 3 basic types of instruction formats:
  - R-format
  - I-format
  - J-format

Instruction Formats

- I-format: used for instructions with immediates, **`lw`** and **`sw`** (since offset counts as an immediate), and branches (**`beq`** and **`bne`**),
  - (but not the shift instructions; later)
- J-format: used for **`j`** and **`jal`**
- R-format: used for all other instructions
- It will soon become clear why the instructions have been partitioned in this way.

R-Format Instructions (1/5)

- Define "fields" of the following number of bits each: 6 + 5 + 5 + 5 + 5 + 6 = 32

31 0

6	5	5	5	5	6

- For simplicity, each field has a name:

opcode	rs	rt	rd	shamt	funct

- Important: On these slides and in book, each field is viewed as a 5- or 6-bit unsigned integer, not as part of a 32-bit integer.
  - Consequence: 5-bit fields can represent any number 0-31, while 6-bit fields can represent any number 0-63.

R-Format Instructions (2/5)

- What do these field integer values tell us?
  - **`opcode`**: partially specifies what instruction it is
    - Note: This number is equal to **`0`** for all R-Format instructions.
  - **`funct`**: combined with **`opcode`**, this number exactly specifies the instruction
- Question: Why aren't **`opcode`** and **`funct`** a single 12-bit field?
  - We'll answer this later.

R-Format Instructions (3/5)

- More fields:
  - **`rs`** (Source Register): *generally* used to specify register containing first operand
  - **`rt`** (Target Register): *generally* used to specify register containing second operand (note that name is misleading)
  - **`rd`** (Destination Register): *generally* used to specify register which will receive result of computation

R-Format Instructions (4/5)

- Notes about register fields:
  - Each register field is exactly 5 bits, which means that it can specify any unsigned integer in the range 0-31. Each of these fields specifies one of the 32 registers by number.
  - The word "generally" was used because there are exceptions that we'll see later. E.g.,
    - **`mult`** and **`div`** have nothing important in the **`rd`** field since the dest registers are **`hi`** and **`lo`**
    - **`mfhi`** and **`mflo`** have nothing important in the **`rs`** and **`rt`** fields since the source is determined by the instruction (see COD)

R-Format Instructions (5/5)

- Final field:
  - **`shamt`**: This field contains the amount a shift instruction will shift by. Shifting a 32-bit word by more than 31 is useless, so this field is only 5 bits (so it can represent the numbers 0-31).
  - This field is set to **`0`** in all but the shift instructions.
- For a detailed description of field usage for each instruction, see green insert in COD (You will be given a copy for all exams)

Peer Instruction

```
r: ...     # R/W $s0,$v0,$t0,$a0,$sp,$ra,mem
   ...     ### PUSH REGISTER(S) TO STACK?
   jal e   # Call e
   ...     # R/W $s0,$v0,$t0,$a0,$sp,$ra,mem
   jr $ra  # Return to caller of r

e: ...     # R/W $s0,$v0,$t0,$a0,$sp,$ra,mem
   jr $ra  # Return to r
```

What does **`r`** have to push on the stack before "**`jal e`**"?

```
a)  1 of ($s0,$sp,$v0,$t0,$a0,$ra)
b)  2 of ($s0,$sp,$v0,$t0,$a0,$ra)
c)  3 of ($s0,$sp,$v0,$t0,$a0,$ra)
d)  4 of ($s0,$sp,$v0,$t0,$a0,$ra)
e)  5 of ($s0,$sp,$v0,$t0,$a0,$ra)
```


"And in Conclusion…"

- Register Conventions: Each register has a purpose and limits to its usage. Learn these and follow them, even if you're writing all the code yourself.
- Logical and Shift Instructions
  - Operate on bits individually, unlike arithmetic, which operate on entire word.
  - Use to isolate fields, either by masking or by shifting back and forth.
  - Use shift left logical, **`sll`**, for multiplication by powers of 2
  - Use shift right logical, **`srl`**, for division by powers of 2 of unsigned numbers (**`unsigned int`**)
  - Use shift right arithmetic, **`sra`**, for division by powers of 2 of signed numbers (**`int`**)
- New Instructions:
  `and, andi, or, ori, sll, srl, sra`

ALSO in conclusion…

- Simplifying MIPS: Define instructions to be same size as data word (one word) so that they can use the same memory (compiler can use lw and sw).
- Computer actually stores programs as a series of these 32-bit numbers.
- MIPS Machine Language Instruction:
  32 bits representing a single instruction

R	opcode	rs	rt	rd	shamt	funct


Popular Electronics

EXCLUSIVE!

ALTAIR 8800

The most powerful minicomputer project ever presented—can be built for under $400

ALTAIR 8800

BY H. EDWARD ROBERTS AND WILLIAM YATES

PROCESSOR DESCRIPTION

Bonus slides

- These are extra slides that used to be included in lecture notes, but have been moved to this, the "bonus" area to serve as a supplement.
- The slides will appear in the order they would have in the normal presentation

Bonus

Shift Instructions (review) (1/4)

- Move (shift) all the bits in a word to the left or right by a number of bits.
  - Example: shift right by 8 bits

```
0001 0010 0011 0100 0101 0110 0111 1000

0000 0000 0001 0010 0011 0100 0101 0110
```

  - Example: shift left by 8 bits

```
0001 0010 0011 0100 0101 0110 0111 1000

0011 0100 0101 0110 0111 1000 0000 0000
```


Shift Instructions (2/4)

- Shift Instruction Syntax:
  1 2,3,4
  …where
  1) operation name
  2) register that will receive value
  3) first operand (register)
  4) shift amount (constant < 32)
- MIPS shift instructions:
  1. `sll` (shift left logical): shifts left and fills emptied bits with 0s
  2. `srl` (shift right logical): shifts right and fills emptied bits with 0s
  3. `sra` (shift right arithmetic): shifts right and fills emptied bits by sign extending

Shift Instructions (3/4)

- Example: shift right arithmetic by 8 bits

```
0001 0010 0011 0100 0101 0110 0111 1000

0000 0000 0001 0010 0011 0100 0101 0110
```

- Example: shift right arithmetic by 8 bits

```
1001 0010 0011 0100 0101 0110 0111 1000

1111 1111 1001 0010 0011 0100 0101 0110
```


Shift Instructions (4/4)

- Since shifting may be faster than multiplication, a good compiler usually notices when C code multiplies by a power of 2 and compiles it to a shift instruction:

  `a *= 8;` (in C)

  would compile to:

  `sll $s0,$s0,3` (in MIPS)
- Likewise, shift right to divide by powers of 2 (rounds towards -∞)
  - remember to use `sra`

Example: Fibonacci Numbers 1/8

- The Fibonacci numbers are defined as follows: F(n) = F(n – 1) + F(n – 2), F(0) and F(1) are defined to be 1
- In scheme, this could be written:

```
(define (Fib n)
  (cond  ((= n 0) 1)
         ((= n 1) 1)
         (else (+(Fib (- n 1))
                 (Fib (- n 2)))))
```

Example: Fibonacci Numbers 2/8

- Rewriting this in C we have:

```
int fib(int n) {
  if(n == 0) { return 1; }
  if(n == 1) { return 1; }
  return (fib(n - 1) + fib(n - 2));
}
```


Example: Fibonacci Numbers 3/8

- Now, let's translate this to MIPS!
- You will need space for three words on the stack
- The function will use one `$s` register, `$s0`
- Write the Prologue:

```
fib:
addi $sp, $sp, -12  # Space for three words
sw $ra, 8($sp)      # Save return address
sw $s0, 4($sp)      # Save s0
```


Example: Fibonacci Numbers 4/8

° Now write the Epilogue:

```
fin:
lw $s0, 4($sp)      # Restore $s0
lw $ra, 8($sp)      # Restore return address
addi $sp, $sp, 12   # Pop the stack frame
jr $ra              # Return to caller
```


Example: Fibonacci Numbers 5/8

° Finally, write the body. The C code is below. Start by translating the lines indicated in the comments

```
int fib(int n) {
 if(n == 0) { return 1; } /*Translate Me!*/
 if(n == 1) { return 1; } /*Translate Me!*/
 return (fib(n - 1) + fib(n - 2));
 }
```

```
addi $v0, $zero, 1      # $v0 = 1
beq  $a0, $zero, fin    #
addi $t0, $zero, 1      # $t0 = 1
beq  $a0, $t0, fin      #
Continued on next slide.  .  .
```


Example: Fibonacci Numbers 6/8

° Almost there, but be careful, this part is tricky!

```
int fib(int n) {
   . . .
   return (fib(n - 1) + fib(n - 2));
 }
```

```
addi $a0, $a0, -1     # $a0 = n - 1
sw $a0, 0($sp)        # Need $a0 after jal
jal fib               # fib(n - 1)
lw $a0, 0($sp)        # restore $a0
addi $a0, $a0, -1     # $a0 = n - 2
```


Example: Fibonacci Numbers 7/8

° Remember that $vo is caller saved!

```
int fib(int n) {
   . . .
   return (fib(n - 1) + fib(n - 2));
 }
```

```
add $s0, $v0, $zero   # Place fib(n – 1)
                      # somewhere it won't get
                      # clobbered
jal fib               # fib(n - 2)
add $v0, $v0, $s0     # $v0 = fib(n-1) + fib(n-2)
To the epilogue and beyond.  .  .
```

Example: Fibonacci Numbers 8/8

° Here's the complete code for reference:

```
fib:  addi $sp, $sp, -12
      sw $ra, 8($sp)
      sw $s0, 4($sp)
      addi $v0, $zero, 1
      beq $a0, $zero, fin
      addi $t0, $zero, 1
      beq $a0, $t0, fin
      addi $a0, $a0, -1
      sw $a0, 0($sp)
      jal fib
      lw $a0, 0($sp)
      addi $a0, $a0, -1
      add $s0, $v0, $zero
      jal fib
      add $v0, $v0, $s0
fin:  lw $s0, 4($sp)
      lw $ra, 8($sp)
      addi $sp, $sp, 12
      jr $ra
```


Bonus Example: Compile This (1/5)

```
main() {
  int i,j,k,m; /* i-m:$s0-$s3 */
  ...
  i = mult(j,k); ...
  m = mult(i,i); ...
}
int mult (int mcand, int mlier){
  int product;
 product = 0;
  while (mlier > 0)  {
   product += mcand;
   mlier -= 1; }
  return product;
  }
```


Bonus Example: Compile This (2/5)

```
__start:
  ...
  add $a0,$s1,$0          # arg0 = j
  add $a1,$s2,$0          # arg1 = k
  jal mult                # call mult
  add $s0,$v0,$0          # i = mult()
  ...
  add $a0,$s0,$0          # arg0 = i
  add $a1,$s0,$0          # arg1 = i
  jal mult                # call mult
  add $s3,$v0,$0          # m = mult()
  ...
  j __exit
```

```
main() {
int i,j,k,m; /* i-m:$s0-$s3 */
...
i = mult(j,k); ...
m = mult(i,i); ... }
```


Bonus Example: Compile This (3/5)

- Notes:
  - `main` function ends with a jump to `__exit`, not `jr $ra`, so there's no need to save `$ra` onto stack
  - all variables used in `main` function are saved registers, so there's no need to save these onto stack

Bonus Example: Compile This (4/5)

```
mult:
    add  $t0,$0,$0    # prod=0
Loop:
    slt  $t1,$0,$a1     # mlr > 0?
    beq  $t1,$0,Fin     # no=>Fin
    add  $t0,$t0,$a0    # prod+=mc
    addi $a1,$a1,-1     # mlr-=1
    j    Loop           # goto Loop
Fin:
    add  $v0,$t0,$0     # $v0=prod
    jr   $ra            # return
```

```
int mult (int mcand, int mlier){
int product = 0;
while (mlier > 0)  {
 product += mcand;
 mlier -= 1; }
return product;
}
```


Bonus Example: Compile This (5/5)

- Notes:
  - no `jal` calls are made from `mult` and we don't use any saved registers, so we don't need to save anything onto stack
  - temp registers are used for intermediate calculations (could have used s registers, but would have to save the caller's on the stack.)
  - `$a1` is modified directly (instead of copying into a temp register) since we are free to change it
  - result is put into `$v0` before returning (could also have modified `$v0` directly)