EE 105 | Discussion 12

Kieran Peleaux & Qianyi Xie

Discussion Outline

- Midterm 2 Solutions
  - Problem 1(b)
  - Problem 1(c)
- Diode-connected Transistors
- Current Mirrors

MT2: Problem 1(b)

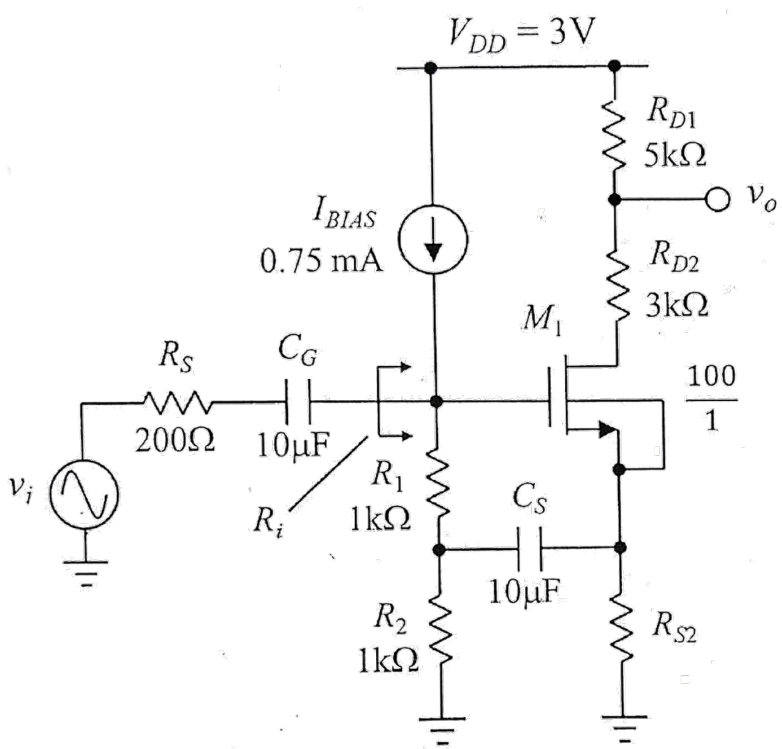

Device Parameters:

NMOS:
$V_{tn0} = 0.7V$
$2|\phi_f| = 0.6V$
$\mu_n C_{ox} = 200\mu A/V^2$
$\lambda_n = 0.01\ V^{-1}$

- Find R_{s2} to get I_C =100 μA
- Find R_i
- Find an expression for f_H

MT2: Problem 1(b) – *Find* R_{S2}

(DC analysis open all C's)

$V_{tn} = V_{tn0}$, b/c B & S are shorted

$I_D = 100\mu A$ (given)

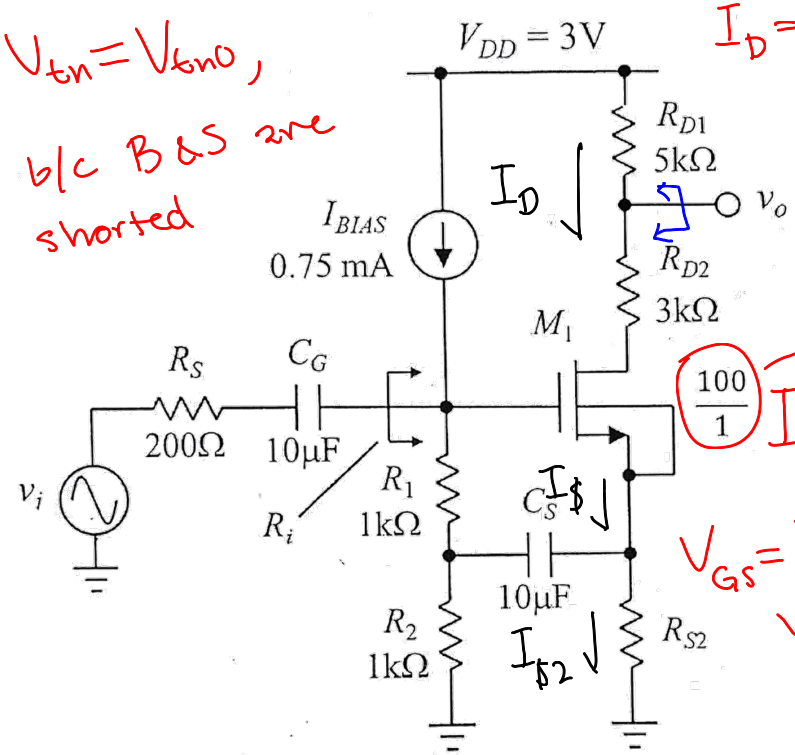

Device Parameters:
NMOS:
$V_{tn0} = 0.7V$
$2\lvert\phi_f\rvert = 0.6V$
$\mu_n C_{ox} = 200\mu A/V^2$
$\lambda_n = 0.01\ V^{-1}$

$\frac{100}{1}$

$I_D = \frac{\mu_n C_{ox}}{2}\frac{W}{L}(V_{GS} - V_{tn})^2$

$(1 + \cancel{\lambda} V_{DS})$ small

$V_{GS} = \sqrt{\frac{2I_D}{k_n}} + V_{tn0} = 0.8V$

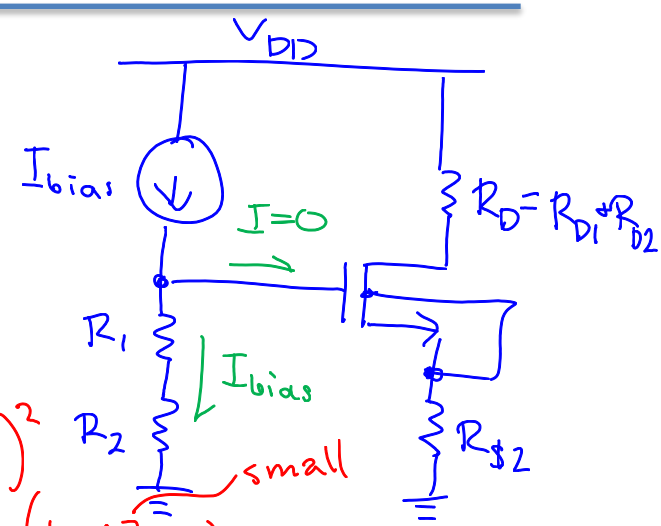

$V_G = I_{bias}(R_1 + R_2) = 1.5V$

$(I_{S2} = I_S = I_D)$

$$R_{S2} = \frac{V_S}{I_D} = \frac{V_G - V_{GS}}{I_D} = \frac{0.7V}{100\mu A}$$

$$R_{S2} = 7k\Omega$$

MT2: Problem 1(b) – *Find R_i*

(midband, so short large caps, open small caps, turn off DC sources)

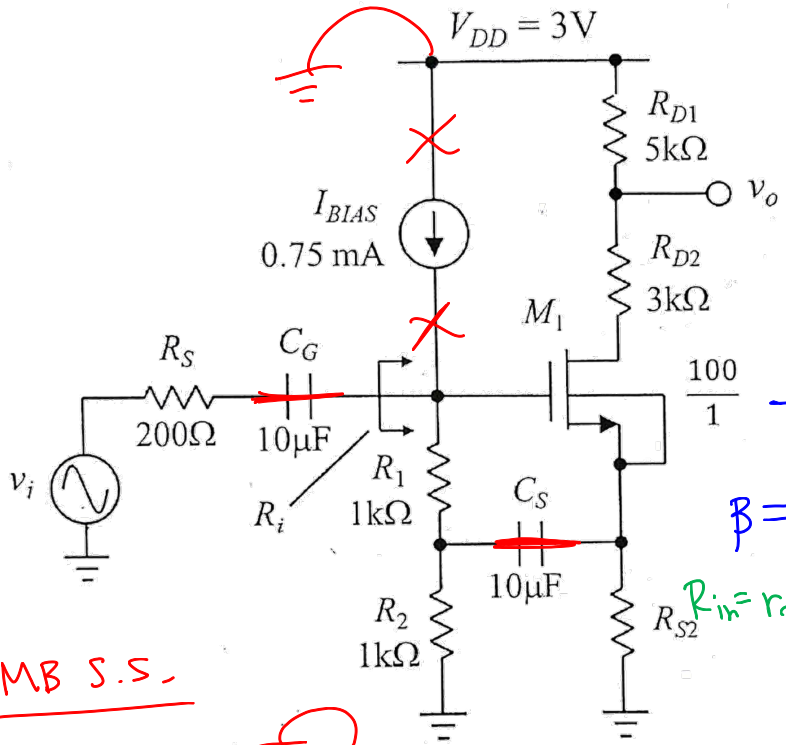

Device Parameters:

NMOS:
$V_{tn0} = 0.7V$
$2|\phi_f| = 0.6V$
$\mu_n C_{ox} = 200\mu A/V^2$
$\lambda_n = 0.01\ V^{-1}$

hybrid-π

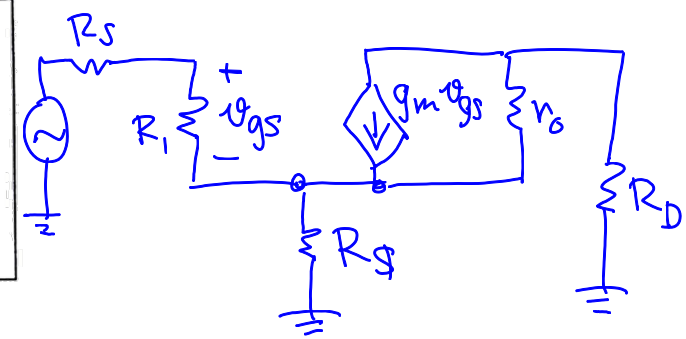

BJT	MOS
r_π	R_1
$\beta = g_m r_\pi$	$\beta_{eff} = g_m R_1$
$R_{in} = r_\pi + (\beta+1)R_E$	$R_{in} = R_1 + (\beta_{eff}+1)R_\$$

⇒ Use inspection to get R_{in}

$$R_{in} = R_1 + (g_m R_1 + 1)(R_2 \parallel R_{\$2})$$

$$R_{in} = 3.625\ k\Omega$$

MB S.S.

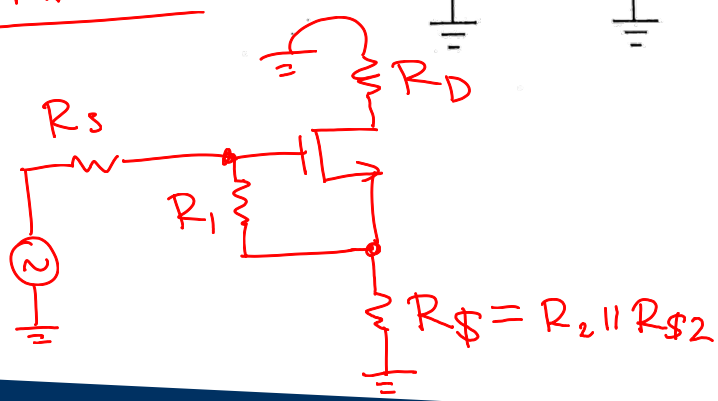

MT2: Problem 1(b) – *Find* f_H (OCTC)

$C_{sb} = 0$, b/c S & B shorted

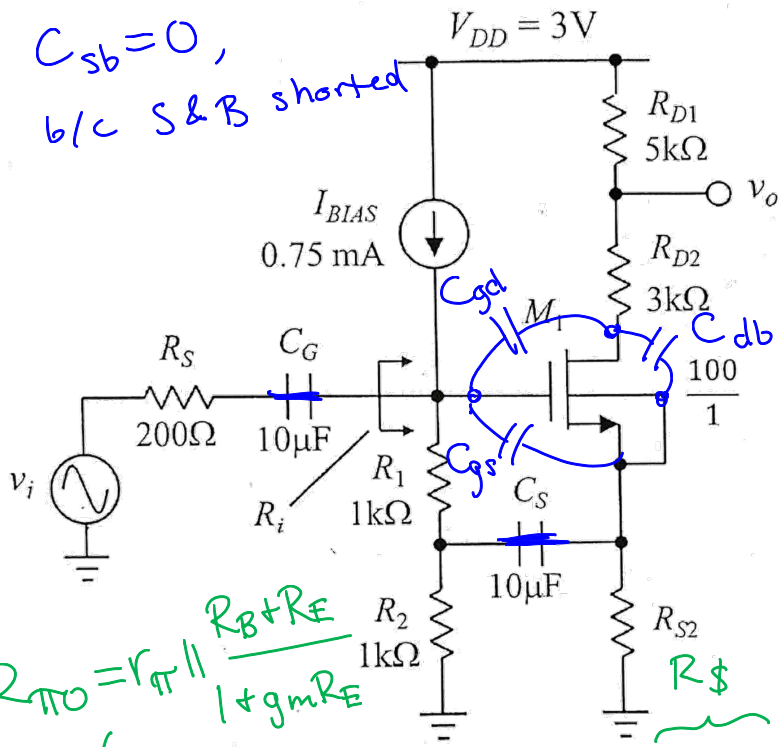

Device Parameters:
NMOS:
$V_{tn0} = 0.7V$
$2\lvert\phi_f\rvert = 0.6V$
$\mu_n C_{ox} = 200\mu A/V^2$
$\lambda_n = 0.01\ V^{-1}$

$$f_H = \frac{1}{2\pi \sum \tau}$$

$$\tau_{gs} = C_{gs} R_{gs0}$$

$$R_{\pi 0} = r_\pi \parallel \frac{R_B + R_E}{1 + g_m R_E}$$

$$R_{gs0} = R_1 \parallel \frac{R_s + \overbrace{(R_2 \parallel R_{S2})}^{R_\$}}{1 + g_m (R_2 \parallel R_{S2})}$$

$$g_m = \frac{2 I_D}{V_{ov}}$$

MT2: Problem 1(b) – *Find* f_H

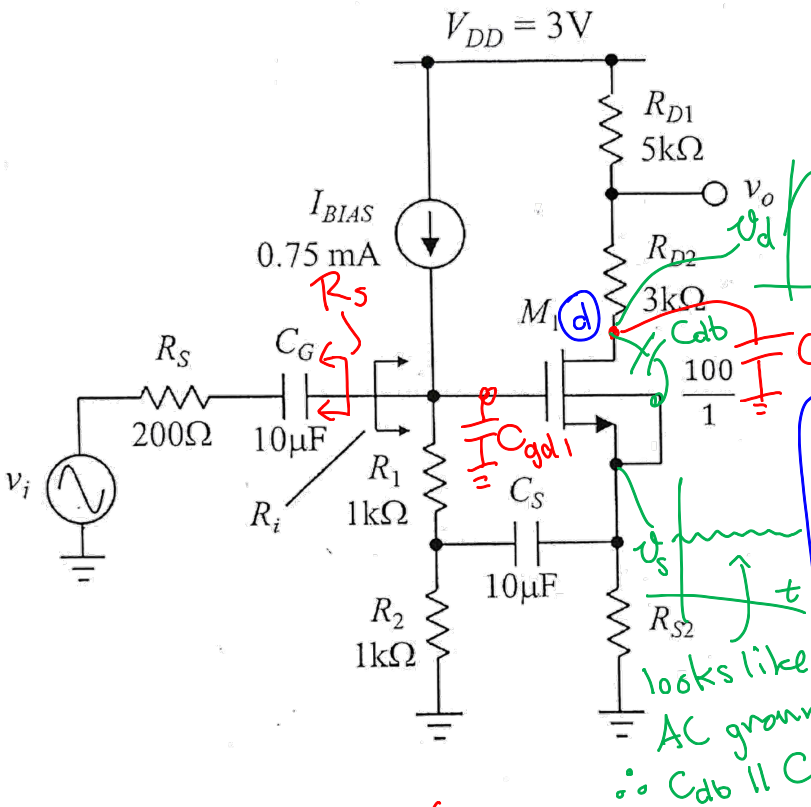

Device Parameters:
NMOS:
$V_{t0} = 0.7V$
$2\lvert\phi_f\rvert = 0.6V$
$\mu_n C_{ox} = 200\mu A/V^2$
$\lambda_n = 0.01\ V^{-1}$

Miller equiv. C_{gd}

$$C_{gd1} = C_{gd}\left(1 - \frac{v_d}{v_g}\right)$$

$$= C_{gd}\left(1 + G_m R_{d}\right)$$

$$G_m = \frac{g_m}{1 + g_m R_s}$$

$$R_{d} = R_D \parallel r_o(1 + g_m R_s)$$

$$R_{d} \approx R_D$$

$$C_{gd1} = \left(1 + \frac{g_m R_D}{1 + g_m R_s}\right) C_{gd}$$

$$C_{gd2} \approx C_{gd}$$

$$\tau_g = C_{gd1}\left(R_s \parallel R_{in}\right) \qquad \tau_d = \left(C_{db} + C_{gd2}\right)\left(R_D\right)$$

$$f_H \approx \frac{1}{2\pi\left(\tau_{gs} + \tau_g + \tau_d\right)}$$

MT2: Problem 1(c) (SCTC)

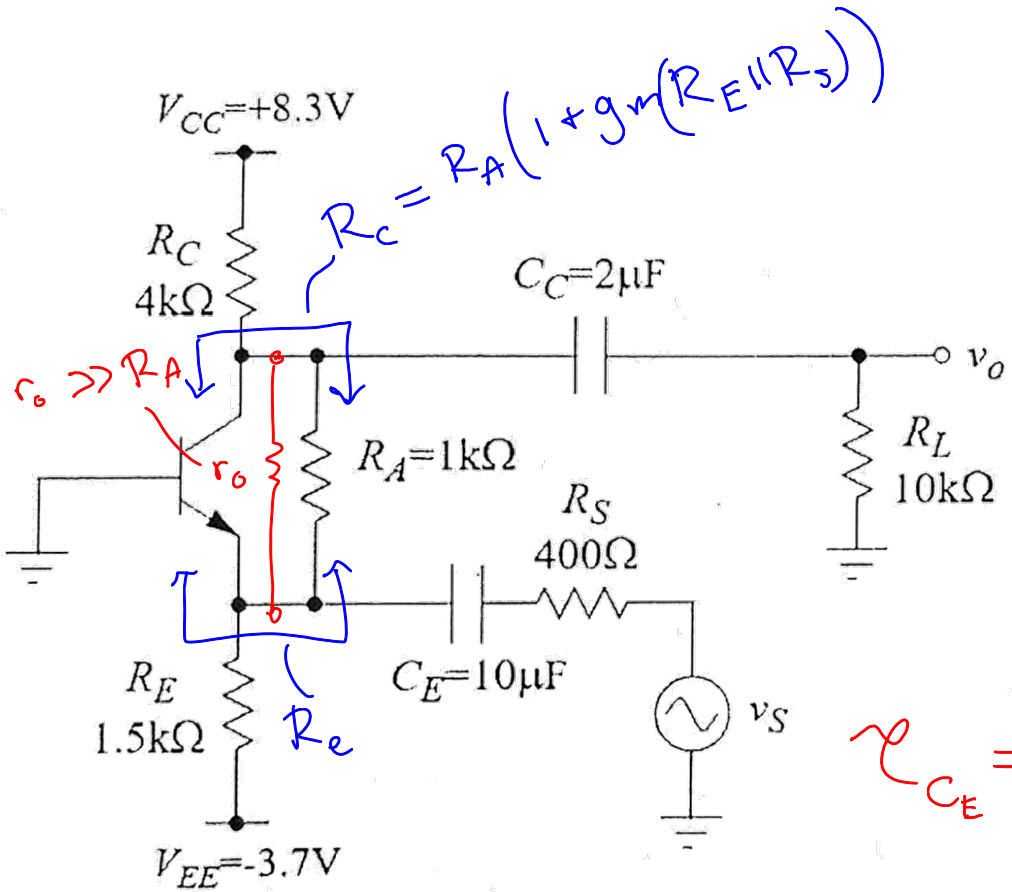

Device Parameters:
$\beta = 200$
V_A =200V
C_μ = 4pF
f_T = 400MHz
I_C = 1mA

- Find f_L

find by applying test source

$$\tau_{C_E} = C_E(R_s + R_E \| R_e)$$

$$\tau_{C_c} = C_c(R_L + R_\phi \| R_c)$$

$$f_L \approx 38\ \text{Hz}$$

Diode Connected Transistors

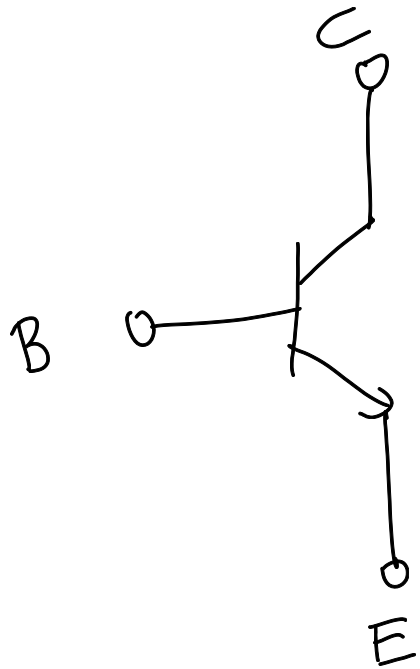

(3-terminal)

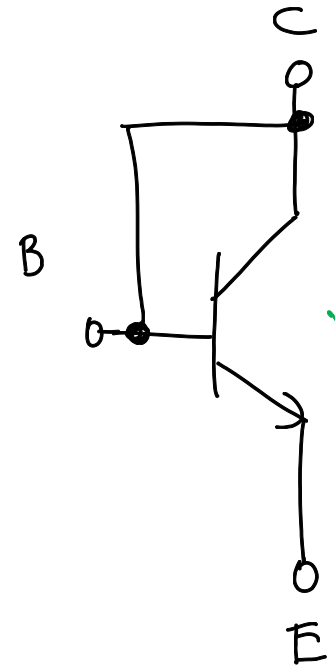

(2-terminal)

$V_B = V_C = V_E + V_{BE(ON)}$

$V_{CE} = V_C - V_E = V_E + V_{BE(ON)} - V_E$

$V_{CE} = V_{BE(ON)} \geq V_{CE,sat}$

~ 0.7 ~ 0.2

Won't go into saturation!

Diode Connected Transistors

What's happening?

Normal BJTs are actually voltage-controlled current sources $\left(I_c = I_S e^{\frac{v_{BE}}{V_T}}\right)$, where we approximate v_{BE} as constant.

To set a specific I_c, we need to choose V_B, V_E, R_E, R_C carefully.

stay in F.A.

Diode-connected BJTs allow us to set I_C with a single resistor!

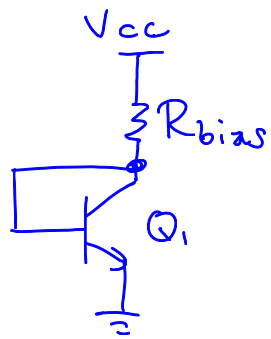

$$I_{C1} \approx \frac{V_{CC} - V_C}{R_{bias}} = \frac{V_{CC} - V_{BE(ON)}}{R_{bias}}$$

equal if $\beta = \infty$

Current Mirrors

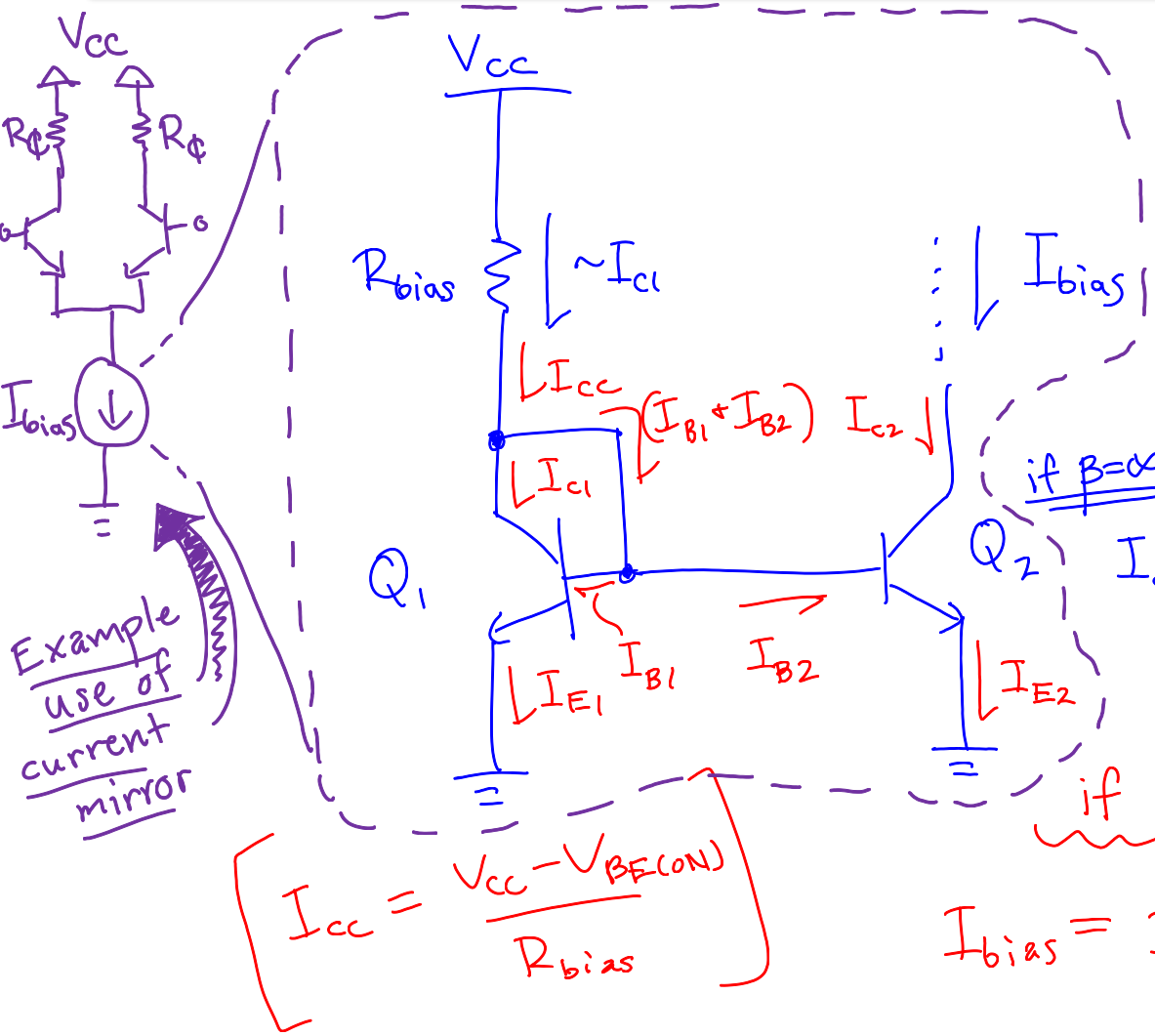

$$v_{BE1} = v_{BE2}$$

$$I_{c1} \propto v_{BE1}, \quad I_{c2} \propto v_{BE2}$$

if Q_1, Q_2 matched,

$$I_{c1} = I_{c2}$$

if $\beta = \infty$

$$I_{c1} = \frac{(V_{cc} - V_{BE1(on)})}{R_{bias}} = I_{c2} = I_{bias}$$

$$\left[I_{cc} = \frac{V_{cc} - V_{BE(ON)}}{R_{bias}} \right]$$

if $\beta \neq \infty$?

$$I_{bias} = I_{cc} \frac{\beta}{\beta + 2}$$

Say we want $I_{bias} = 3 I_{cc}$?