EECS 120 **Fall 2004**

Homework 8 Solutions

1. (d) $H(s) = \dfrac{s+2}{s^2+7s+12}, -4 < \mathrm{Re}\{s\} < -3$, where $s = \sigma + j\omega$

Doing partial fraction expansion we get:

$H(s) = \dfrac{A}{s+4} + \dfrac{B}{s+3}$, solving for A,B we get: A = 2, B = -1

$$H(s) = \frac{2}{s+4} + \frac{-1}{s+3}$$

$$h(t) = 2e^{-4t}u(t) + e^{-3t}u(-t)$$

(e) $H(s) = \dfrac{s+1}{s^2+5s+6}, -3 < \mathrm{Re}\{s\} < -2$, where $s = \sigma + j\omega$

Doing partial fraction expansion we get:

$H(s) = \dfrac{A}{s+3} + \dfrac{B}{s+2}$, solving for A,B we get: A = 2, B = -1

$$H(s) = \frac{2}{s+3} + \frac{-1}{s+2}$$

$$h(t) = 2e^{-3t}u(t) + e^{-2t}u(-t)$$

2.

1. $x(t)e^{-3t}$ is absolutely integrable.

We know that $X(s) = \displaystyle\int_{t=-\infty}^{\infty} x(t)e^{-\sigma t}e^{-j\omega t}dt$

If $x(t)e^{-3t}$ is absolutely integrable this implies that $\sigma = 3$ is in the ROC.

Hence the ROC is :
(TL) Re(s) > 2 (TR) Re(s) > -2 (BL) Re (s) > 2 (BR) s = C, (C is whole complex plane)

2. $x(t) * (e^{-t}u(t))$ is absolutely integrable.

Laplace Transform of $e^{-t}u(t)$ is $\frac{1}{s+1}$, $-1 < \text{Re}\{s\}$

Let the ROC of the convolution above be denoted R. We know that R must contain $\text{Re}\{s\} = 0$ since we are given that the convolution is absolutely integrable. Let the ROC of x(t) be denoted R_x. So we have that $\{R_x \cap (-1 < \text{Re}\{s\})\}$ must contain $\text{Re}\{s\} = 0$

Then the constraint is that R must contain the line Re{s} = 0.

Hence the ROC is :
(TL) -2 >Re(s) > 2 (TR) Re(s) > -2 (BL) Re (s) < 2 (BR) s = C, (C is whole complex plane)

3. x(t) = 0, t > 1.

x(t) is left sided. This implies that if $\text{Re}\{s\} = \sigma_1$ is in the ROC, then all values of s for which $\text{Re}\{s\} < \sigma_1$ will also be in the ROC.

Hence the ROC is :
(TL) Re(s) < -2 (TR) Re(s) < -2 (BL) Re (s) < 2 (BR) s = C, (C is whole complex plane)

4. x(t) = 0, t < -1.

x(t) is right sided. This implies that if $\text{Re}\{s\} = \sigma_1$ is in the ROC, then all values of s for which $\text{Re}\{s\} > \sigma_1$ will also be in the ROC.

Hence the ROC is :
(TL) Re(s) > 2 (TR) Re(s) > -2 (BL) Re (s) > 2 (BR) s = C, (C is whole complex plane)

3.

(a)

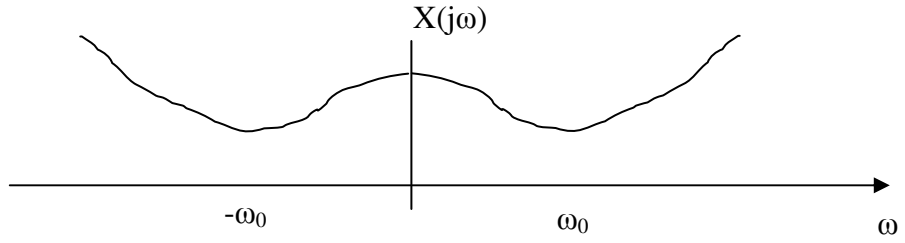

(b)

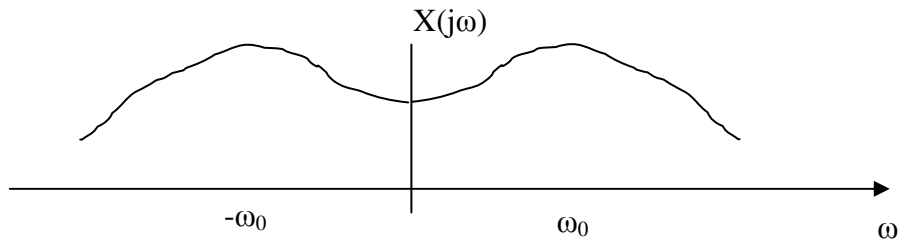

(c)

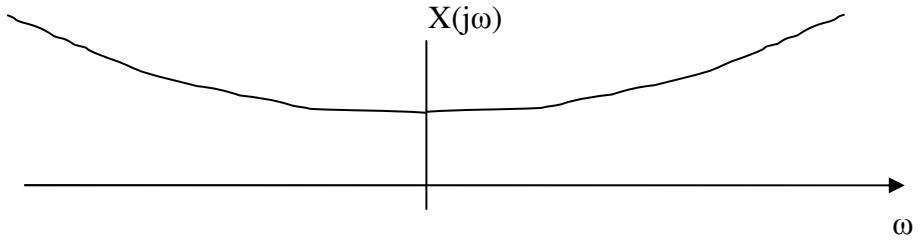

(d)

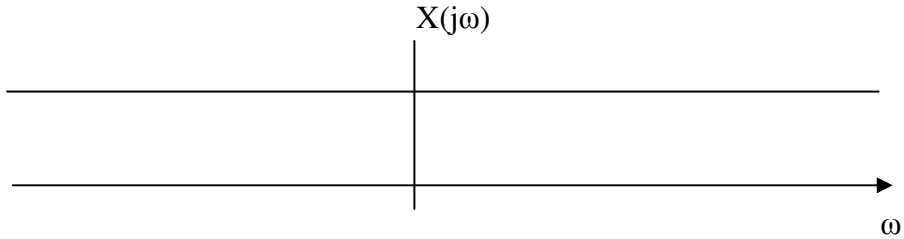

(e)

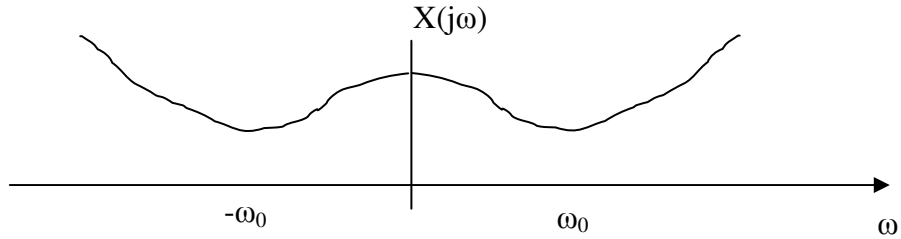

(f)

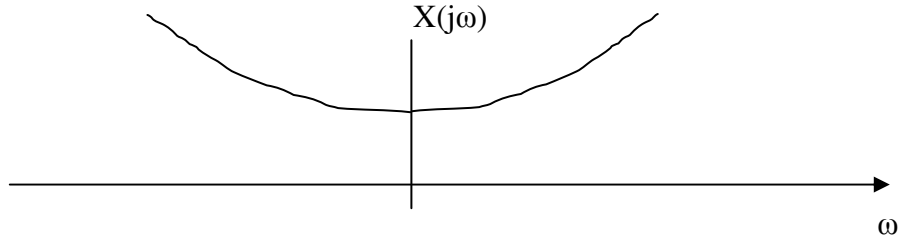

4.

(a) $H_1(s) = \dfrac{s+1}{s^2+5s+6}$

$$\frac{d^2y(t)}{dt^2} + 5\frac{dy(t)}{dt} + 6y(t) = \frac{dx(t)}{dt} + x(t)$$

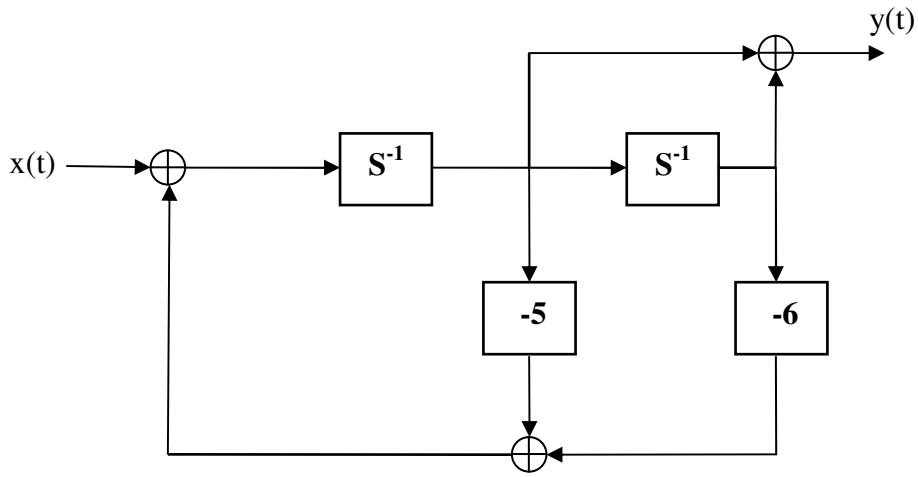

(b) $H_2(s) = \dfrac{s^2 - 5s + 6}{s^2 + 7s + 10}$

$$\frac{d^2 y(t)}{dt^2} + 7\frac{dy(t)}{dt} + 10y(t) = \frac{d^2 x(t)}{dt} - 5\frac{dx(t)}{dt} + 6x(t)$$

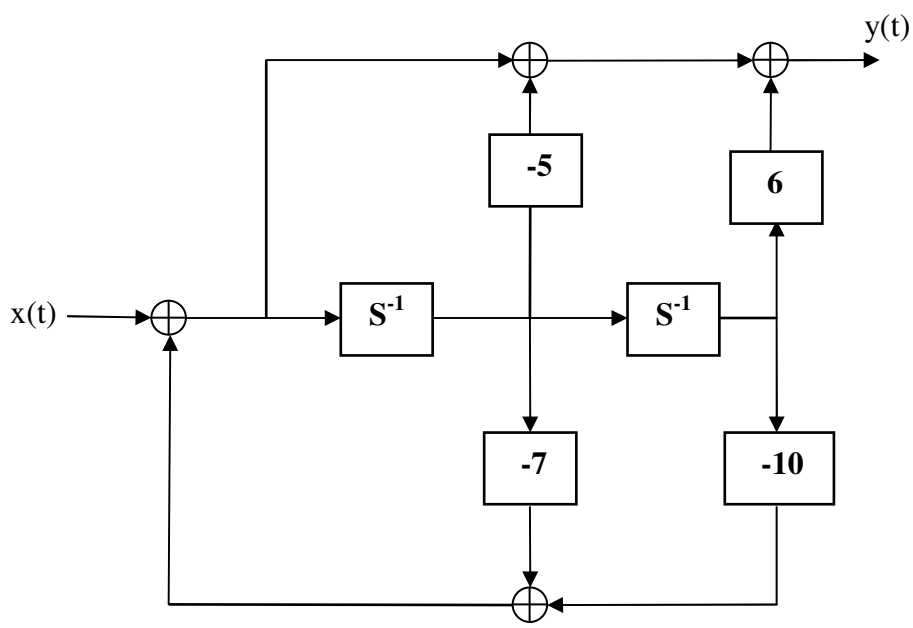

(c) $H_3(s) = \dfrac{s}{(s+2)^2}$

$$\frac{d^2 y(t)}{dt^2} + 4\frac{dy(t)}{dt} + 4y(t) = \frac{dx(t)}{dt}$$

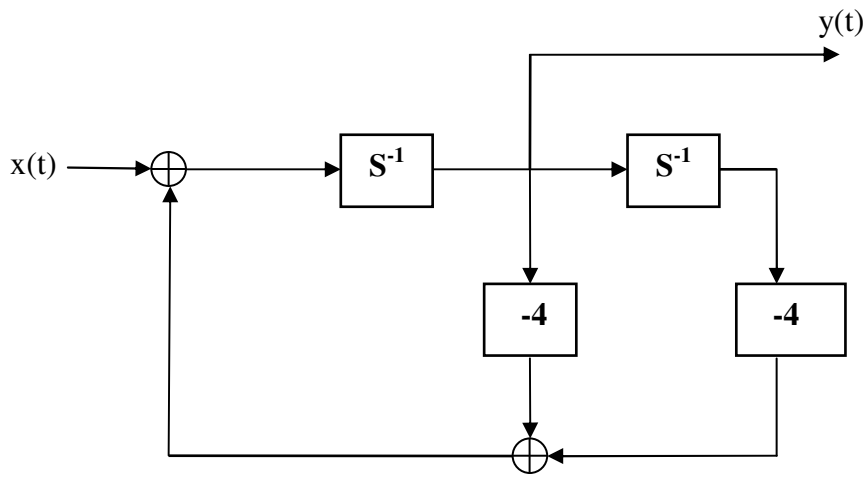

5.
(a)

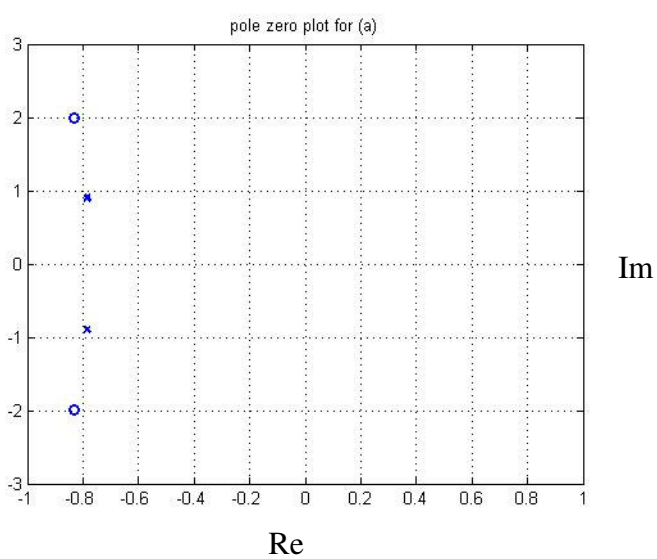

Possible ROCs:

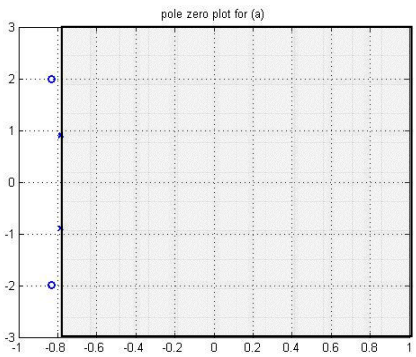

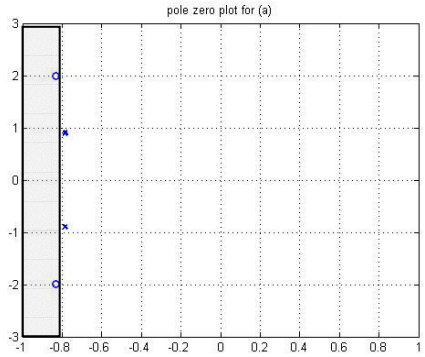

(b)

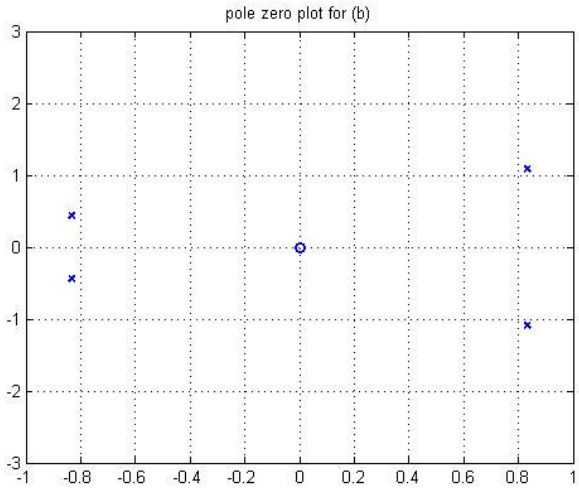

Im

Re

Possible ROCs:

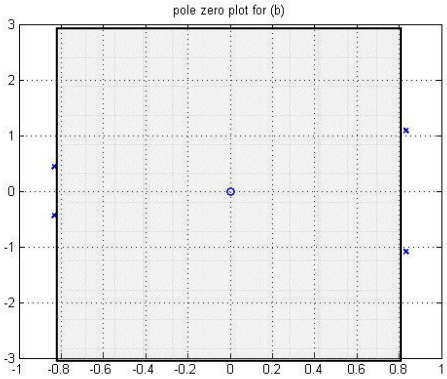

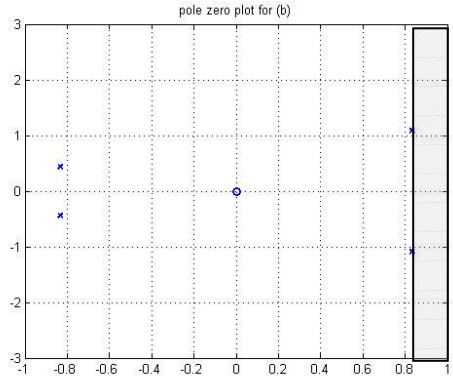

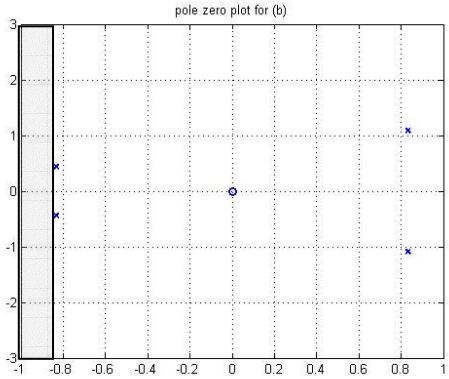
pole zero plot for (b)
3
2
1
0
-1
-2
-3
-1
-0.8
-0.6
-0.4
-0.2
0
0.2
0.4
0.6
0.8
1