University of California - Berkeley
Department of Electrical Engineering & Computer Sciences
EE126 Probability and Random Processes
(Spring 2012)

Discussion 13 Notes
April 19, 2012

1. There are n fish in a lake, some of which are green and the rest blue. Each day, Helen catches 1 fish. She is equally likely to catch any one of the n fish in the lake. She throws back all the fish, but paints each green fish blue before throwing it back in. Let G_i denote the event that there are i green fish left in the lake.

   (a) Show how to model this fishing exercise as a Markov chain, where $\{Gi\}$ are the states. Explain why your model satisfies the Markov property.

   (b) Find the transition probabilities $\{p_{ij}\}$.

   (c) List the transient and the recurrent states.

2. Consider the following Markov chain, with states labelled $s_0, s_1, ..., s_5$:

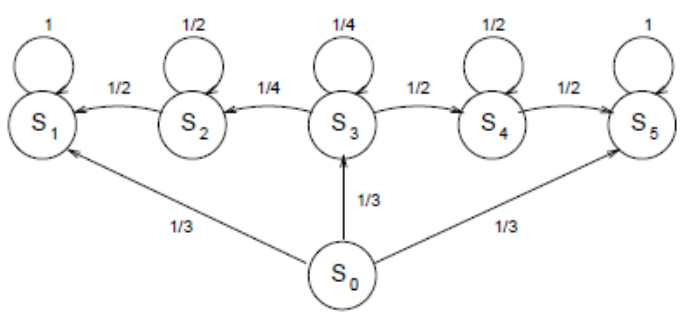

   Given that the above process is in state s_0 just before the first trial, determine:

   (a) The probability that the process enters s_2 for the first time as the result of the kth trial.

   (b) The probability that the process never enters s_4.

   (c) The probability that the process enters s_2 and then leaves s_2 on the next trial.

   (d) The probability that the process enters s_1 for the first time on the third trial.

   (e) The probability that the process is in state s_3 immediately after the nth trial.

   (f) The long-term proportion of time spent in each state, π_i for $i = 0, \ldots 5$.

   (g) The expected time until the process is absorbed.

Solutions:

1. (a) The number of remaining green fish at time t completely determines all the relevant information of the systems entire history (relevant to predicting the future state.) Therefore it is immediate that the number of green fish is the state of the system and the process has the Markov property.

(b) At any given time, the number of green fish must either remain the same or decrease by 1. It decreases by 1 if a green fish is caught, which occurs with probability $\frac{i}{n}$, and otherwise remains the same. Thus we have:

$$p_{ij} = \begin{cases} \frac{n-i}{n} & j = i \\ \frac{i}{n} & j = i-1 \\ 0 & \text{otherwise} \end{cases}$$

(c) The state 0 is an absorbing state since there is a positive probability that the system will enter it, and once it does, it will remain there forever. Therefore the state with 0 green fish is the only recurrent state, and all other states are then transient.

2. (a) Let A_k be the event that the process enters s_2 for the first time on trial k. The only way to enter state s_2 fot eh first time on the kth trial is to enter state s_3 on the first trial, remain in s_3 for the next $k-2$ trials, and finally enter s_2 on the kth trial. Thus

$$P(A_k) = p_{03} \cdot p_{33}^{k-2} \cdot p_{32} = \left(\frac{1}{3}\right)\left(\frac{1}{4}\right)^{k-2}\left(\frac{1}{4}\right) = \left(\frac{1}{3}\right)\left(\frac{1}{4}\right)^{k-1} \quad \text{for } k = 2, 3, \ldots$$

(b) There are 3 possible ways for the process to never enter s_4. The first two are immediate transitions into the absorbing states, s_1 and s_5. The other is if the first transition is to s_3, and then there is an eventual transition to s_2. We will call this event A. The probabilities of the first two cases are each $\frac{1}{3}$. We can compute the probability of the event A in two different ways. The first is to notice that $A = \bigcup_{k=2}^{\infty} A_k$. As a result, we can compute

$$P(A) = \sum_{k=2}^{\infty} P(A_k) = \sum_{k=2}^{\infty}\left(\frac{1}{3}\right)\left(\frac{1}{4}\right)^{k-1} = \frac{1}{12}\sum_{i=0}^{\infty}\left(\frac{1}{4}\right)^{i} = \left(\frac{1}{12}\right)\left(\frac{1}{1-\frac{1}{4}}\right) = \frac{1}{9}.$$

The second is to notice that given that the chain is in s_3, it must eventually either go to s_2 or s_4, so the probability that it eventually goes to s_2 must be

$$P(A|\text{in } s_3) = \frac{p_{32}}{p_{32} + p_{34}} = \frac{1/4}{1/4 + 1/2} = \frac{1}{3}.$$

Then we have

$$P(A) = P(\text{go to } s_3)P(A|\text{in } s_3) = p_{03}\frac{1}{3} = \frac{1}{9}.$$

So the final answer is

$$P(\text{never go to } s_4) = p_{01} + p_{05} + P(A) = \frac{7}{9}.$$

(c)

$$\begin{aligned} P(\text{enter } s_2 \text{ and leave immediately}) &= P(\text{enter } s_2)P(\text{leave immediately}|\text{in } s_2) \\ &= P(A) \cdot p_{21} \\ &= \left(\frac{1}{9}\right)\left(\frac{1}{2}\right) = \frac{1}{18}. \end{aligned}$$

(d) This event can only happen if the sequence of state transitions is:

$$s_0 \to s_3 \to s_2 \to s_1$$

Thus,

$$P(\text{enter } s_1 \text{ for the first time on third trial}) = p_{03} \cdot p_{32} \cdot p_{21} = \left(\frac{1}{3}\right)\left(\frac{1}{4}\right)\left(\frac{1}{2}\right) = \frac{1}{24}.$$

(e)

$$\begin{aligned} P(\text{in } s_3 \text{ at } n\text{th trial}) &= P(\text{enter } s_3 \text{ on first trial})P(\text{stay in } s_3 \text{ for n-1 trials}|\text{in } s_3) \\ &= p_{03}\left(p_{33}\right)^{n-1} \\ &= \frac{1}{3}\left(\frac{1}{4}\right)^{n-1} \quad \text{for } n = 1, 2, \ldots \end{aligned}$$

(f) States s_0, s_2, s_3, s_4 are transient, so

$$\pi_0 = \pi_2 = \pi_3 = \pi_4 = 0.$$

We can also observe that

$$\pi_1 = P(\text{eventually go to } s_1) = p_{01} + P(A) = \frac{1}{3} + \frac{1}{9} = \frac{4}{9}.$$

All the remaining probability must then go to π_5 giving

$$\pi_5 = 1 - \pi_1 = \frac{5}{9}.$$

(g) Using the notation of the textbook:

$$\begin{aligned} \mu_1 = \mu_5 &= 0 \\ \mu_2 &= 1 + \frac{1}{2}\mu_1 + \frac{1}{2}\mu_2 = 2 \\ \mu_4 &= 1 + \frac{1}{2}\mu_4 + \frac{1}{2}\mu_5 = 2 \\ \mu_3 &= 1 + \frac{1}{4}\mu_2 + \frac{1}{4}\mu_3 + \frac{1}{2}\mu_4 = \frac{10}{3} \\ \mu_0 &= 1 + \frac{1}{3}\mu_1 + \frac{1}{3}\mu_3 + \frac{1}{3}\mu_5 = \frac{25}{9} \end{aligned}$$

So the expected time to absrobtion is $\frac{25}{9}$ time steps.