EECS 140 **Homework #5** **Fall 05**

Due 10/31/05 before 5pm

Use the device parameters from the handout and spice level 1 model

1) For the circuit in figure 1, assume that W/L for all devices is 100um/1um, and I_{ref} is 1mA
   a) Calculate the expected output resistance and turn-on voltage.
   b) Use SPICE to plot Iout vs. Vout, and use expression-builder in awaves to plot the output resistance as a function of output voltage.
2) For the circuit in figure 2, assume that W/L for all devices is 100um/1um, and I_{ref} is 1mA
   a) Calculate the minimum value for VBN for which all transistors will be in saturation, and calculate the resulting turn-on voltage for the current source and its output resistance.
   b) Use SPICE to plot the output current vs. VBN for Vout = 2V. Make another current sink (identical copy of M1 and M2) and bias its output at Vout2=3V. Use the difference between the two output currents to plot the output resistance as a function of VBN.
   c) Make a table with the calculated and simulated values for the output resistance and turn-on voltage of each of the current sources in problems 1 and 2. Which current source gives the best performance? Why?
3) Generate VBN from part 2a using a diode-connected NMOSFET and another 1mA current. Verify that the bias voltage, turn-on voltage, and output resistance are what you expect.
4) For the circuit in figure 3, assume that the current source has a finite output resistance RL, and that the MOSFETs are identical.
   a) Write an expression for the four small signal gains: from the two inputs to the two outputs.

   Assume that the current source is 1mA, and the devices are 100um/1um:
   b) Calculate the four small-signal gains assuming that the current source is made with a PMOSFET with an output resistance equal to the NMOS devices.
   c) Calculate the four small-signal gains assuming that the current source is made with a PMOS cascode with an output resistance equal to the NMOS cascode output resistance.
5) Design a telescopic cascode amplifier to pull no more than 1mW of power from a 5V supply with a gain of at least 10,000. Draw a schematic of your amplifier and label all transistors with their sizes, bias conditions, and small-signal parameters. What is the input common mode range of your amplifier? Estimate the pole frequency and unity gain frequency with no load, and with a 10pF load. Use SPICE to calculate the phase margin with no load, and with a 10pF load, and label the plots with your estimated frequencies. Will the amplifier be stable in unity gain feedback in both cases?

a)

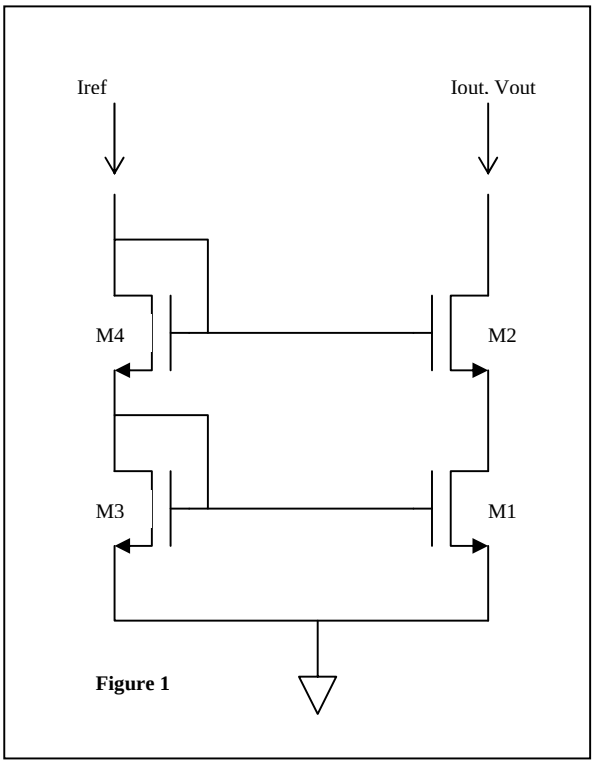

Figure 1

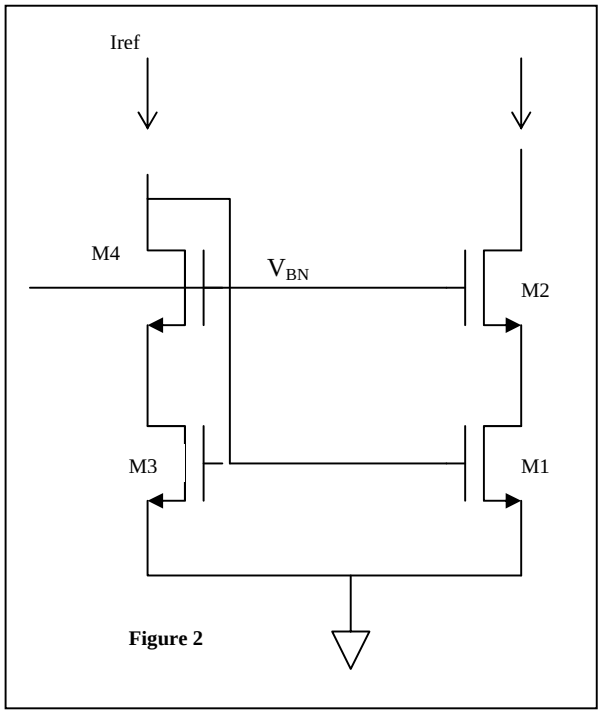

Figure 2

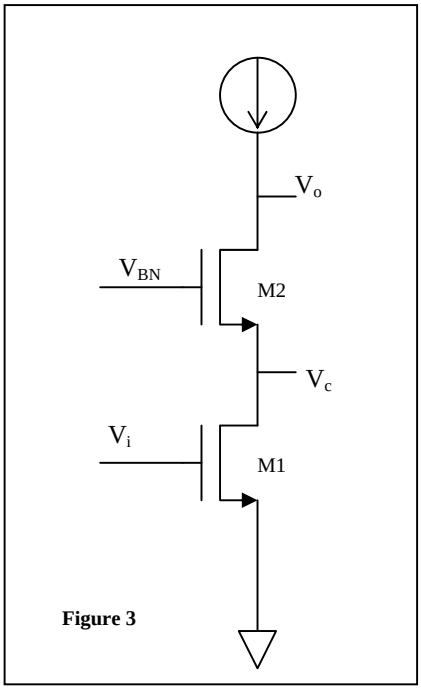

Figure 3