## PROBLEM SET #11

*Issued: Tuesday, Dec. 1, 2015*

*Due (at 8 a.m.): Wednesday, Dec. 9, 2015*, in the EE 140/240A HW box near 125 Cory.

**1.** Using feedback techniques, determine the input and output impedance and current gain ($I_{out}/I_{in}$) of the circuit in Fig. PS11-1. Leave your answer in terms of variables ($g_{m1}$, $R_1$, $r_o$, etc.) and assume $\gamma = 0$.

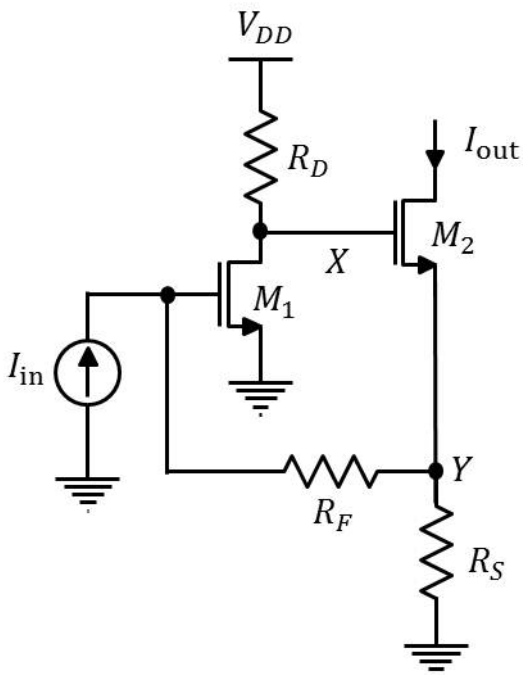


**Fig. PS11-1**

**2.** A CMOS feedback amplifier is shown on Fig. PS.11-2. If the dc input voltage is zero, find the output resistance, sketch the magnitude and phase Bode plots of the circuit and label the important parameters on your sketch, e.g. low frequency gain, pole frequency assuming the following parameters:

$C_1 = 10pF, \mu_n C_{ox} = 60\frac{\mu A}{V^2}, \mu_p C_{ox} = 30\frac{\mu A}{V^2}, V_{tn} = 0.8V,$
$V_{tp} = -0.8V, \lambda_n = |\lambda_p| = 0.03V^{-1}, and\ \gamma_n = \gamma_D = 0.$

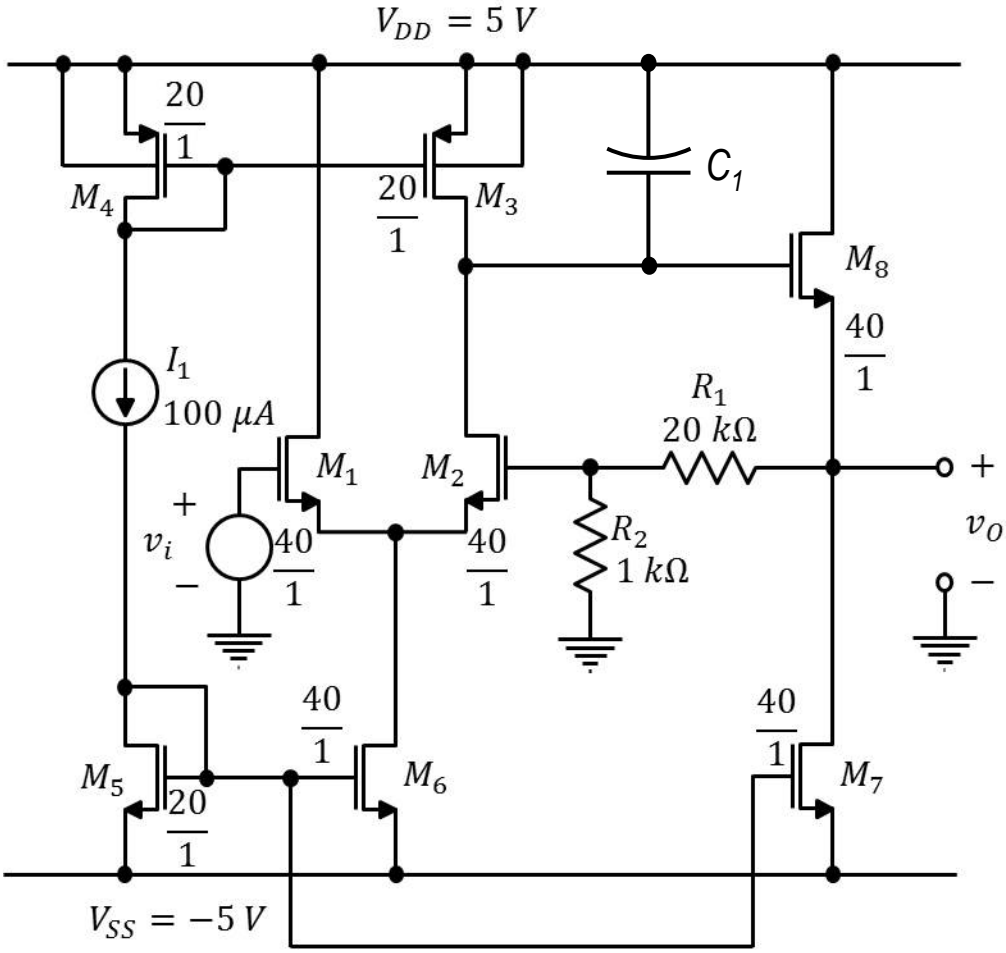


**Fig. PS11-2**