PROBLEM SET #3

Issued: Tuesday, Sep. 15, 2015

Due (at 8 a.m.): Wednesday, Sep. 23, 2015, in the EE 140/240A HW box near 125 Cory.

*Unless otherwise stated, assume all the transistors are properly biased in the saturation region.

1. For each of the amplifiers in Fig. PS3-1, V_{cc}=20V, $R_S = R_L = 10\text{k}\Omega$, V_b= 5V, and V_{EE} = -10V. For all BJTs: $\beta = 100$, C_μ = 2pF, and f_T = 400MHz. Ignore Early effect and C_{cs}.

(a) Find the mid-band gain $A = V_o/V_i$, the 3-dB frequency ω_H, and the gain-bandwidth product $GBW = |A\omega_H|$.

(b) Briefly compare the results obtained from part (a) for the three amplifiers and identify advantages or disadvantages between the three amplifiers. Hint: Consider the following metrics: power consumption, output voltage swing, gain, bandwidth, and GBW.

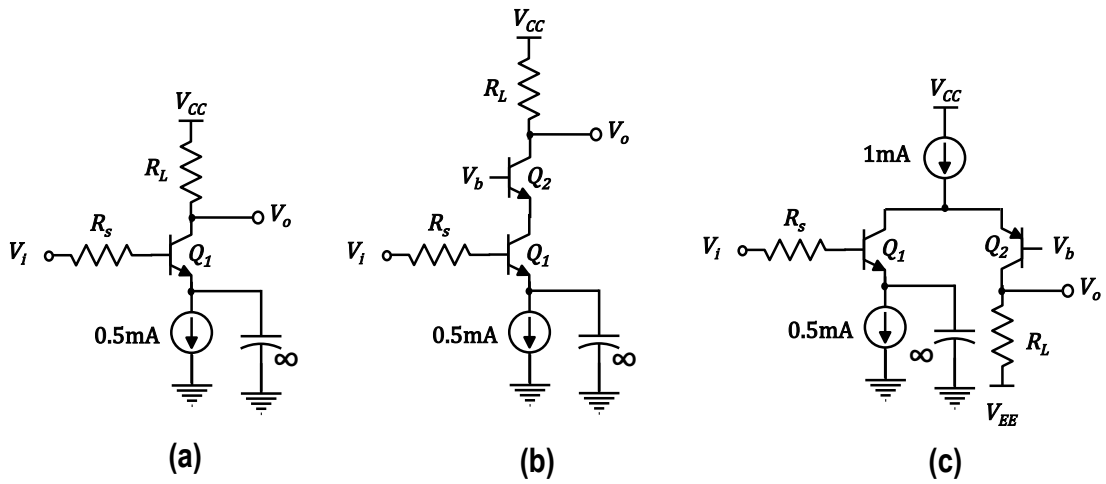

Fig. PS3-1

2. For the amplifier shown in Fig. PS3-2, $V_{DD} = 5V$, $R_S = 1\text{k}\Omega$, $R_1 = 5\text{k}\Omega$, R_D =4kΩ, R_B = 0.8kΩ, R_L= 50Ω, and $C_1 = C_2 = \infty$. All transistors have the same parameters $V_{th0} = 0.75\text{V}$, $C_{ox} = 15\text{fF/}\mu\text{m}^2$, $\mu_n C_{ox} = 50\mu\text{A/V}^2$, $\lambda = 0$, and $C_{ov} = 0.75\text{fF/}\mu\text{m}$. You can ignore C_{db} and C_{sb}. All channel lengths are 0.5μm.

(a) Calculate R_2, W_1, and W_2 such that the overdrive voltage of both M_1 and M_2 are 250mV and the voltage at the point A is equal to 2V when no input signal is applied.

(b) Find midband voltage gain V_o/V_i, R_{in}, and R_{out}.

(c) Find the ω_H of the circuit. Point out which capacitor dominates.

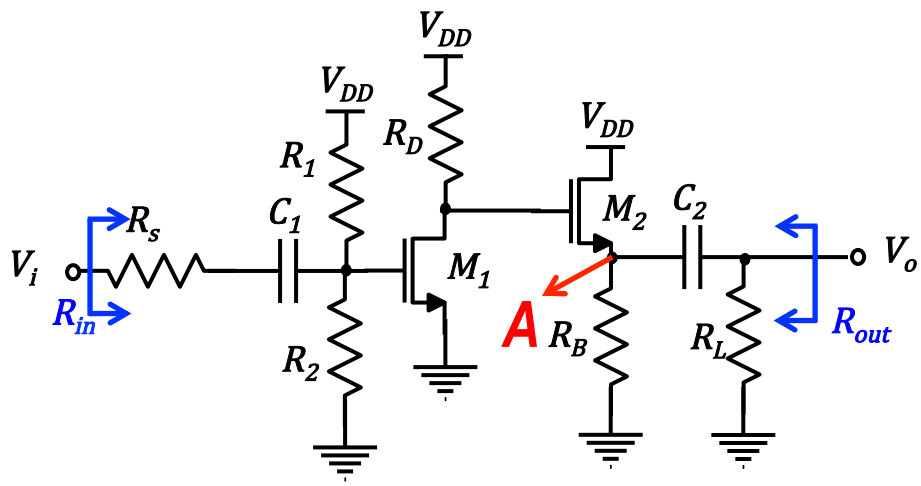

Fig. PS3-2

3. Consider the common-source amplifier with source resistance R_S in fig. PS3-3.

(a) Derive an expression for the mid-band gain V_o/V_i.

(b) Find the ω_H of the circuit. You can neglect C_{sb} and C_{db}

(c) Given that $R_{in} = 100\text{k}\Omega$, $g_m = 4\text{mA/V}$, $R_L = 5k\Omega$, $C_{gs} = C_{gd} = 1\text{pF}$, calculate the low-frequency gain A, 3-dB frequency ω_H, and gain-bandwidth product GBW $= |A\omega_H|$ for $R_s = 0, 100\Omega,\ 250\Omega$, respectively.

(d) Based on the result in (c), what's the effect of R_s on gain and bandwidth?

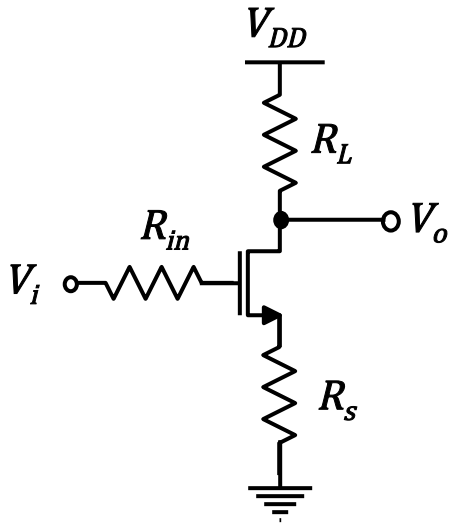

Fig. PS3-3

4. Suppose the BJTs in the amplifier of Fig. PS3-4 have the same $\beta = 100$, $V_A = 100\text{V}$, $C_\mu = 0.2\text{pF}$, and $C_{je} = 0.8\text{pF}$. At a bias current of $100\mu\text{A}$, the 2 BJTs have the same $f_T = 400\text{MHz}$. You can neglect C_{cs}.

(a) Find the mid-band gain V_o/V_i and the input resistance R_{in}.

(b) Find the ω_H of the circuit. Point out which capacitor dominates.

(c) Find the mid-band gain V_o/V_i and ω_H of the circuit with the bias current increased to 1mA.

(d) Briefly compare the results of parts (a), (b), and (c). What is the benefit you got from increasing the bias current?

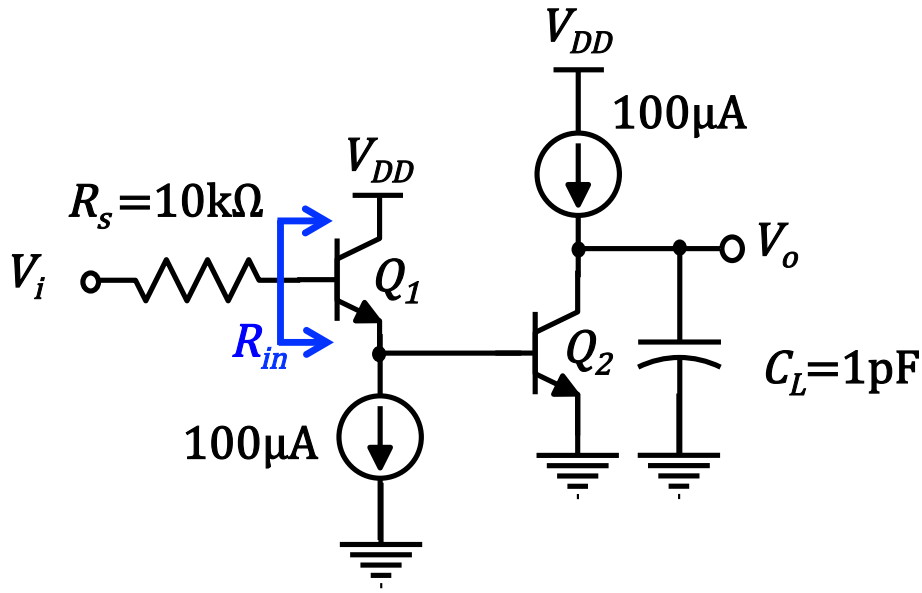

Fig. PS3-4