EE140/EE240A

Discussion 13

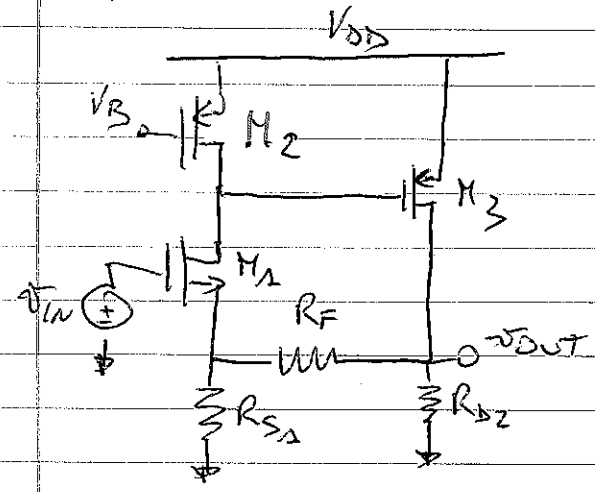

? Type of feedback

Series - shunt. The circuit aims at providing an ideal voltage reading at the input and at covering the impedance of the output node to provide as ideal of an output voltage as possible.

? $A_{C.L.}$

- R.R. - cut the loop at the gate of M_3

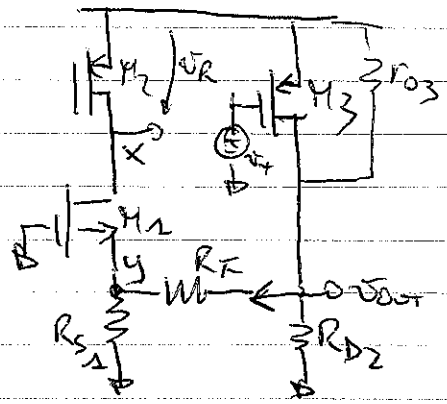

$$RR = -g_{m3} \cdot \underbrace{\frac{r_{o3} \| R_{D2}}{r_{o3} \| R_{D2} + R_F + R_{S_1} \| \frac{1}{g_{m1}}}}_{\text{current divider}} \cdot \underbrace{\frac{R_{S_1}}{R_{S_1} + \frac{1}{g_{m1}}}}_{\text{current divider}} \cdot \underbrace{r_{o2} \| \left[r_{o1}\left(1 + g_{m1} R_{SS}\right) + R_{SS} \right]}_{\text{impedance at node } X}$$

$$R_{SS} = R_{S_1} \| \left[R_F + \left(R_{D2} \| r_{o3} \right) \right]$$

$- A_p = 1 + \frac{R_F}{R_{S_1}}$

The source of M_1 needs to follow the gate, to have $v_{GS_{M_1}} = 0$ not to create infinite current in M_1 ($g_{M_1} \to \infty$). So $v_y = v_{in}$

Also, no current flows in M_1, otherwise it would create a drop on the $v_{o_{M_2}}$ and a finite $v_{GS_{M_2}}$, which would cause infinite current at the output because $g_{M_2} \to \infty$.

$$\Rightarrow \quad v_o = v_y + v_{R_F} = v_{in} + R_F \frac{v_{in}}{R_{S_1}} = \left(1 + \frac{R_F}{R_{S_1}}\right) v_{in}$$

$- A_o = 0$

Since the input is fed to a disactivated device, no signal can flow to the output.

$$\Rightarrow A_{CL} = \frac{A_\infty}{1 + \frac{1}{RR}}$$

<u>Input impedance</u>

The input impedance $R_{in} \to \infty$ because the input is fed to the gate of a MOS

Output impedance

Using Blackman's formula

$$Z_{OUT} = Z_{OUT}(a=0)\,\frac{1+RR_{SHORT}}{1+RR_{OPEN}}$$

$$Z_{OUT}(a=0) = r_{o3} \| R_{D2} \| \left[R_F + \left(R_{S1} \| \frac{1}{g_{m1}}\right)\right]$$

$$RR_{(SHORT)} = 0$$

$$RR_{OPEN} = RR$$

The short output aims at lowering the output impedance.

Now with Two-port

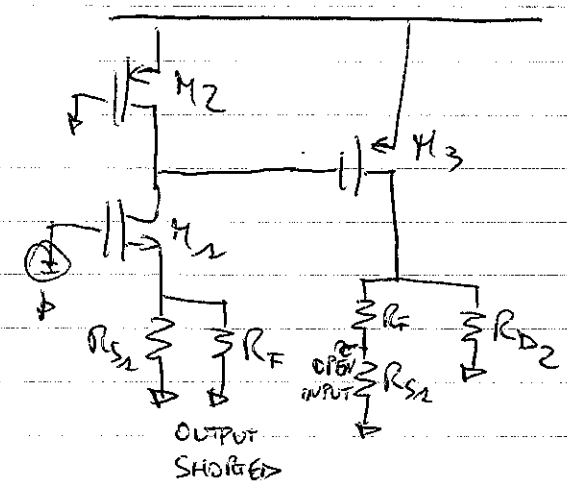

$$f = h_{12f} = \frac{v_1}{v_2}\Big|_{i_1=0} = \frac{R_{S1}}{R_{S1}+R_F}$$

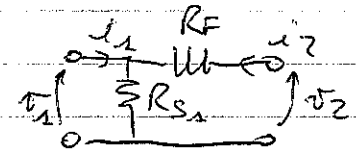

$$a = \frac{g_{m1}}{1+g_{m1}R_{S1}\|R_F} \cdot r_{o2} \| \left[r_{o1}\left(1+g_{m1}R_{S1}\|R_F\right) + R_{S1}\|R_F \right]$$

$$\cdot\; -g_{m3} \cdot \left[r_{o3} \| R_{D2} \| (R_{S1}+R_F) \right]$$

$$A_{CL} = \frac{a}{1+af}$$

$$Z_{IN} = \infty$$

$$Z_{OUT} = Z_{OUT}(a=0) \cdot \frac{1}{1+af}$$ Short connection

× ——— ×

Now we modify the circuit as follows

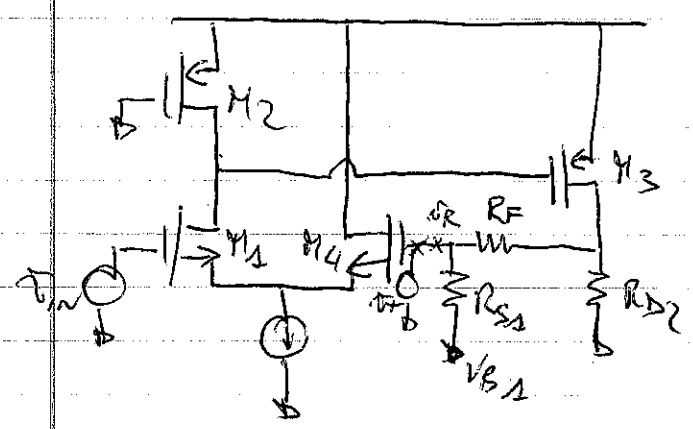

We have added a source-follower M_4 to the circuit. This helps to make the circuit indeed uni-directional.

$$RR = \frac{g_{m4}}{1+g_{m4}\cdot\frac{1}{g_{m3}}} \cdot r_{o2} \,||\, \left[r_{o1}\left(1+g_{m2}\cdot\frac{1}{g_{m4}}\right)\right]$$

$$\cdot\ -g_{m3} \cdot R_{D2} \,||\, r_{o3} \,||\, R_{S1}+R_F \cdot \frac{R_{S1}}{R_{S1}+R_F}$$

$$A_N = 1 + \frac{R_F}{R_{S1}} \qquad A_0 = 0$$

Now with two port analysis

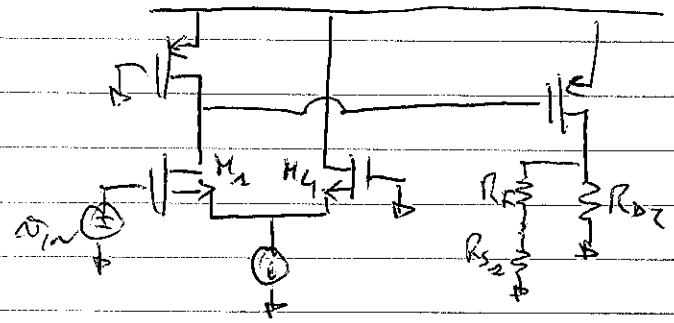

$$a = \frac{g_{m1}}{1+g_{m1}\cdot\frac{1}{g_{m4}}} \cdot r_{o2} \| \left[r_{o1}\left(1+g_{m1}\cdot\frac{1}{g_{m4}}\right)\right]$$

$$\cdot\ -g_{m3}\cdot R_{D2} \| r_{o3} \| (R_{S2}+R_F)$$

$$f = \frac{R_{S1}}{R_{S1}+R_F}$$

$\Rightarrow$ Now $RR = af$!

This shows that the approaches match when the circuit is truly unidirectional! Otherwise, two-port method is just an approximation, while RR gives the exact answer.