EECS 16A Designing Information Devices and Systems I
Fall 2015 Anant Sahai, Ali Niknejad

Discussion 7A

1. Circuits with resistors (HW6 1b)

(a) Show how to solve for the voltages and currents in the following circuit, using nodal analysis (assign a voltage to each node, then apply Ohm's Law and KCL).

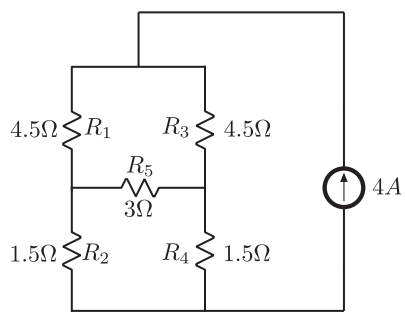

(b) Write out the equations you used in nodal analysis in matrix form. This should be of the form:

$$M\vec{u} = \vec{i}$$

For some matrix M, where $\vec{u}$ are node voltages and $\vec{i}$ is vector of net external currents into nodes (by sources).

2. Capacitors and Charge Sharing

(a) Consider the circuit below, with $C_1 = C_2 = 1\mu F$. Suppose initially C_1 is charged to $+1V$, and C_2 is charged to $+2V$. How much charge is on C_1 and C_2? What is the energy of the configuration (ie, the energy in the two charged capacitors)?

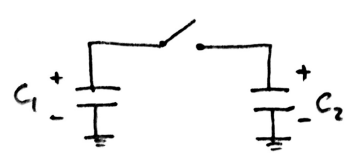

(b) Now the switch is closed. What is the voltage and charges on C_1 and C_2? What is the energy of the configuration?

(c) Is this more or less energy than before the switch was closed? Why?

(d) Consider the following circuit, with $C_1 = 1\mu F$, $C_2 = 3\mu F$. Suppose both capacitors are initially uncharged ($0V$).

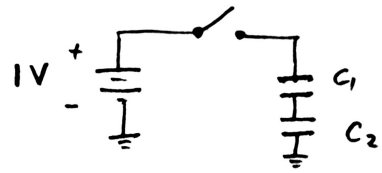

What are the voltages across the capacitors after the switch is closed? What are the charges on the capacitors?

(e) Consider the below circuit, with $C_1 = 1\mu F, R_1 = 1k\Omega, R_2 = 1k\Omega$.

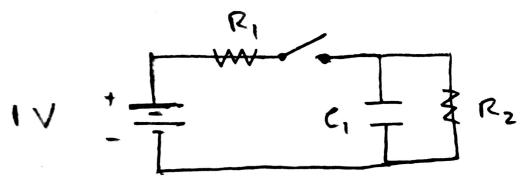

After the switch is closed, and the circuit is allowed to settle, what is voltage across and current through all circuit elements?

3. (BONUS) Uniqueness and Symmetry In this problem, we will show that resistive circuits have a *unique* electric flow. More precisely, for some circuit consisting of resistors, voltage sources, and current sources, there cannot exist two valid current flows (unless there is a loop of zero resistance).

This will justify some techniques that simplify the analysis of circuits. For example, it means that if we "guess" a solution that obeys the KVL/KCL constraints, then this solution is in fact the actual electric flow. It will also allow us to exploit symmetry in circuits.

(a) Suppose that for a particular resistive circuit C (a circuit consisting of resistors, voltage sources, and current sources), there is a solution $(\vec{i}_a, \vec{u}_a)$ of branch currents $\vec{i}_a$ and node voltages $\vec{u}_a$. That is, $(\vec{i}_a, \vec{u}_a)$ defines a valid electric flow (satisfying Ohm's Law, KCL, and constraints of the voltage/current sources). Suppose that there is another solution $(\vec{i}_b, \vec{u}_b)$.

Define the circuit C', as the circuit C, but with all voltage sources set to $0V$ and all current sources set to $0A$. Show that the flow defined by $(\vec{i}^*, \vec{u}^*) = (\vec{i}_b - \vec{i}_a, \vec{u}_b - \vec{u}_a)$ is a valid electric flow for C' (show that it satisfies Ohm's Law, KCL, and constraints of the new voltage/current sources).

It may help to consider a particular circuit C, for concreteness. (For example, the circuit from HW6 1b).

(b) Suppose there are two *distinct* current flows, so that $\vec{i}_b \neq \vec{i}_a$ in the setup of the previous part. Show that if the circuit C' has no loop of zero resistance, this is impossible.

(Hint: Consider the energy dissipated by flow i^* in circuit C'. Are there any sources to supply energy?)

(c) Show that if C has no loop of zero resistance, neither does C'. (Assume that C is well-defined, and does not "short out" any voltage sources). Conclude that if a well-defined resistive circuit has no loop of zero resistance, then it has a unique current flow.

(d) Conversely, show that if a resistive circuit has some loop of zero resistance, the current flow is *not* unique.

(e) We can use the uniqueness principle shown above to simplify circuit analysis, by exploiting symmetries in circuits. In the circuit below, all resistors are 1Ω.

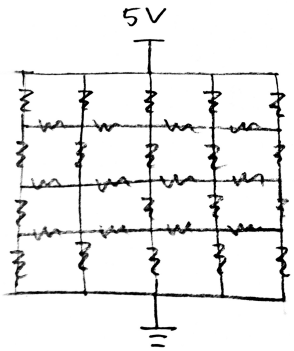

Show that there is no current flowing through the horizontal resistors. What is the current through each vertical resistor?

(Hint: If there was a current flow $\vec{i}_a$ with non-zero current through a horizontal resistor, show that there is another distinct current flow $\vec{i}_b \neq \vec{i}_a$ for the circuit.)