EECS 16A Designing Information Devices and Systems I
Fall 2015 Anant Sahai, Ali Niknejad

Homework 6

This homework is due October 13, 2015, at Noon.

1. Circuits with resistors

(a) Find the voltages across and currents flowing through all the resistors.

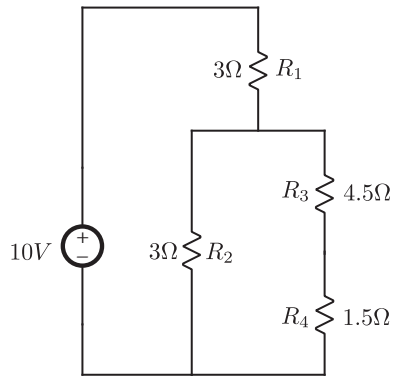

(b) Find the voltages across and currents flowing through all the resistors.

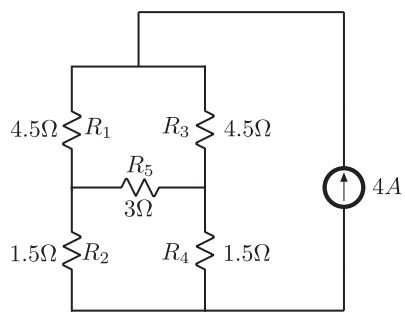

2. KVL/KCL Practice

(a) Use KCL to find the values of i_a (the current through element A), i_c, and i_d for the circuit shown below. Use the arrows as the sign convention for currents. Which elements are connected in series?

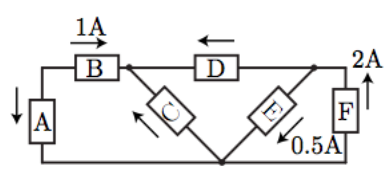

(b) Use KCL to find the values of i_e, i_f, and i_g for the circuit shown below. Which elements are connected in series?

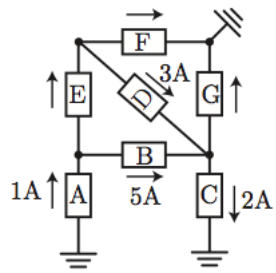

(c) In the circuit below, x denotes some unknown real number. Use KVL to find the values of v_b (the voltage difference across element B), v_c, and v_e for the circuit shown below. Which elements are connected in shunt (i.e. parallel)?

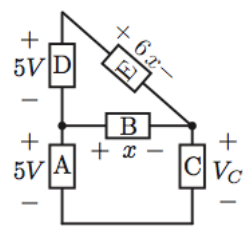

(d) Use KVL to find the values of v_b, v_d, v_e and v_f for the circuit shown below. Which elements are connected in shunt?

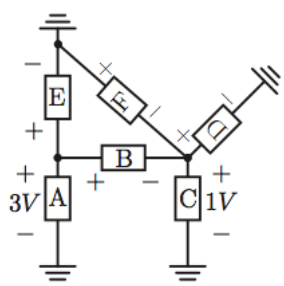

3. Cell Phone Battery As great as smartphones are, one of the main gripes about them is that they need to be recharged too often. Suppose a Samsung Galaxy S3 requires about 0.4 W to maintain a signal and data connection to the nearest tower, as well as its regular activities (dominated by the display and backlight in many cases). The battery provides 2200 mAh at a voltage of 3.8V until it is completely discharged.

(a) How long will one full charge last you?

(b) Suppose the cell phone battery is completely discharged and you want to recharge it completely. How much energy (in J) is this? How much charge (in C) must be pumped through the battery? How many electrons is this? Suppose a is the positive terminal and b is the negative terminal. Should the electrons flow from a to b or b to a?

(c) Suppose PG&E charges \$0.16 per kWh. Every day, you completely discharge the battery and recharge it at night. How much will recharging cost you for the month of October (31 days)?

(d) Using the following information:

- Residential electric power costs \$0.16 per kW hr

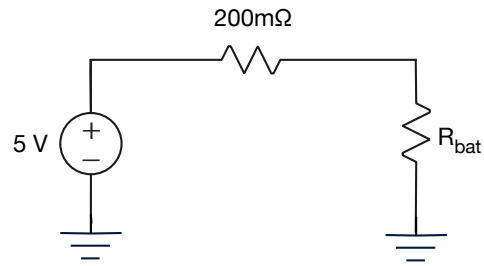

Figure 1: Model of wall plug, wire, and battery.

- Gasoline costs \$3.20 per U.S. gallon, has a density of 720 kg/m^3, and an energy density of 4.5×10^7J/kg
- A AA battery costs \$0.75, and supplies 100 mA with terminal voltage of 1.5 V for 20 hours before it is completely discharged

Convert the cost of all three sources of energy into \$ per Joule and compare which are better or worse for recharging your phone.

(e) You are fed up with PG&E, gas companies, and Duracell/Energizer/etc. You want to generate your own energy and decide to buy a small solar cell (e.g. `http://ixdev.ixys.com/DataSheet/XOB17-Solar-Bit-Datasheet_Mar-2008.pdf`) for \$1.50 on digikey. It delivers 40 mA at 0.5 V in bright sunlight. Unfortunately, now you have can only charge your phone when the sun is up. Using one solar cell, do you think there is enough time to charge a completely discharged phone every day? How many cells would you need to charge a completely discharged battery in an hour? How much will it cost you per joule if you have one solar cell that works for 10 years (assuming you can charge for 16 hours a day)? Do you think this is a good option?

(f) The battery has a lot of internal circuitry that prevents it from getting overcharged (and possibly exploding!) as well as transfering power into the chemical reactions used to store energy. We will model this internal circuitry as being one resistor with resistance R_{bat}, which you can set to any non-negative value you want. Furthermore, we'll assume that all the energy dissipated across R_{bat} goes to recharging the battery. Suppose the wall plug and wire can be modeled as a 5V voltage source and 200 mΩ resistor, as pictured in Fig. 1. What is the power dissipated across R_{bat} for R_{bat}= 1mΩ , 1Ω, and 10kΩ? How long will the battery take to charge for each of those values of R_{bat}?

(g) Suppose you forgot to charge your phone overnight, and you're in a hurry to charge it before you leave home for the day. What should we set R_{bat} to be if we want to charge our battery as quickly as possible? How much current will this draw? How long will it take to charge?

Hint: what choice of R_{bat} maximizes the power dissipated across the resistor?

(h) You might have found that the answer for the previous section seemed to waste a lot of energy. If you don't forget to charge your phone overnight, you have all 8 hours that you spend sleeping to charge your phone. What should you choose for R_{bat} to minimize the amount of wasted energy, while still charging the battery in no longer than 8 hours? Compare the power dissipated across the wire and the power dissipated across R_{bat}. Use the same model from Fig. 1

4. Temperature Sensor

Measuring quantities in the physical world is the job of sensors. This means somehow extracting that information from the world and then converting it into a form that can be observed and processed. Electric circuits can be very useful for doing this.

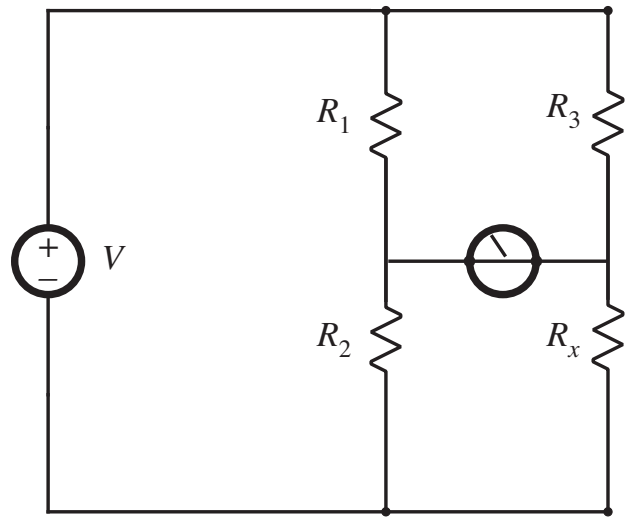

Figure 2: Circuit to measure resistance.

For most materials, resistance increases with increasing temperature; that is, a resistor has higher resistance when it is hot than when it is cold. This is often an annoyance to circuit designers who want their circuits to work the same way at different temperatures, but this fact can also be useful. It allows us to convert temperature, a "physical" quantity, into resistance, an "electrical" quantity, to build an electronic thermometer.

A PT100 is a special resistor made out of platinum that has a very precise relationship between resistance and temperature. At 0°C, the PT100 is a 100Ω resistor. Taking the data from `http://www.hayashidenko.co.jp/en/info12.html`, we did a linear fit and found that the positive temperature coefficient for a PT100 is approximately $0.366\Omega/°C$, that is, an increase in temperature of 1°C increases the PT100's resistance by 0.366Ω.

Consider the circuit in Fig. 2. It allows measuring resistance very precisely, as we will see below. The circle in the middle of the resistors is a *galvanometer*. It functions like an ideal wire [1] , but it also detects any current going through it.

(a) We say that the circuit is balanced when the current across the galvanometer in the middle is 0. Derive a relationship for the unknown resistance R_x in terms of the other three resistances if this is the case.

(b) We can thus find one resistance if we know the other three. Suppose $R_1 = 50\Omega$, $R_3 = 100\Omega$ and R_2 can be adjusted from 0 to 300Ω. This adjustment can be used to balance the circuit. What is the maximum resistance that can thus be measured for R_x? (Only using the fact that the circuit is balanced when R_2 is set appropriately).

(c) Assume R_x in fig. 2 is a PT100. Give a procedure by which you can find the temperature of the resistor. What is the maximum temperature you can measure, and why?

(d) Suppose the company manufacturing your resistors gave you some parts from a bad batch, and instead of being 100Ω, R_3 was actually some random number between 95 and 105Ω (i.e. $R_3 = (1+\varepsilon)100\Omega$

[1] In fact, galvanometers can be constructed as essentially just a coil of wire – current passing through the coil creates a magnetic field, which deflects the needle of a compass according to the strength and direction of the current. This is another wonderful property of electricity – it can be harnessed to have physical macroscale-level effects on the world that are observable by people.

for $|\varepsilon| \leq 0.05$). Unfortunately, you didn't realize this and assumed it was still 100Ω. What is the biggest (in magnitude) error this will introduce to your temperature measurement?

(e) Now assume both R_1 and R_3 came from the same bad batch, so

$$R_1 = (1+\varepsilon)50\Omega$$
$$R_3 = (1+\varepsilon)100\Omega$$

where both R_1 and R_3 have the same ε (still $|\varepsilon| \leq 0.05$). How much error will this introduce to the temperature measurement?

(f) In the setup of the earlier parts (where $R_1 = 50\Omega$ and $R_3 = 100\Omega$ exactly), suppose we can only adjust R_2 in increments of 10Ω. Assume the galvanometer displays the direction of current flow (or 0 if no current). By adjusting R_2 in increments and observing the direction of current flow across the galvanometer, to what accuracy can we measure temperature?

5. **Your Own Problem** Write your own problem related to this week's material and solve it. You may still work in groups to brainstorm problems, but each student should submit a unique problem. What is the problem? How to formulate it? How to solve it? What is the solution?