EECS 16A Designing Information Devices and Systems I
Spring 2016 Elad Alon, Babak Ayazifar Homework 4

This homework is due February 23, 2016, at Noon.

Optional Problems: We **do not** grade these problems. Nevertheless, you are responsible for learning the subject matter within their scope.
Bonus Problems: We **do** grade these problems. Doing them will provide an unspecified amount of extra credit; not doing them will not affect your homework grade negatively. We will specify if the problem is in or out of scope.

1. **Homework process and study group**

   Who else did you work with on this homework? List names and student ID's. (In case of hw party, you can also just describe the group.) How did you work on this homework?
   Working in groups of 3-5 will earn credit for your participation grade.

2. **Finding Null Spaces**

   (a) Consider the column vectors of any 3×5 matrix. What is the maximum possible number of linearly independent vectors you can pick from these column vectors?

   (b) Suppose we have the following 3×5 matrix after row reduction:

   $$A = \begin{bmatrix} 1 & 1 & 0 & -2 & 3 \\ 0 & 0 & 1 & -1 & 1 \\ 0 & 0 & 0 & 0 & 0 \end{bmatrix}$$

   What is the minimum number of vectors spanning the range of A. Find a set of such vectors.

   (c) Recall that for every vector $\vec{x}$ in the null space of A, $A\vec{x} = \vec{0}$. The dimension of a the null space is the minimum number of vectors needed to span it. Find vectors that span the nullspace of A (the matrix in the previous part). What is the dimension of the nullspace of A?

   (d) Find vector(s) that span the null space of the following matrix:

   $$B = \begin{bmatrix} 1 & -2 & 2 & 4 \\ 1 & -2 & 3 & 5 \\ 2 & -4 & 5 & 9 \\ 3 & -6 & 7 & 13 \end{bmatrix}$$

3. **Traffic Flows**

   Your goal is to measure the flow rates of vehicles along roads in a town. However, it is prohibitively expensive to place a traffic sensor along every road. You realize, however, that the number of cars flowing into an intersection must equal the number of cars flowing out. You can use this "flow conservation" to determine the traffic along all roads in a network by only measuring flow along only some roads. In this problem we will explore this concept.

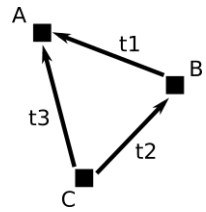

Figure 1: A simple road network.

(a) Let's begin with a network with three intersections, A, B and C. Define the flows t_1 as the rate of cars (cars/hour) on the road between B and A, t_2 as the rate on the road between C and B and t_3 as the rate on the road between C and A.

(Note: The directions of the arrows in the figure are only the way that we define the flow by convention. If there were 100 cars per hour traveling from A to C, then $t_3 = -100$.)

We assume the "flow conservation" constraints: the total number of cars per hour flowing into each intersection is zero. For example at intersection B, we have the constraint $t_2 - t_1 = 0$. The full set of constraints (one per intersection) is:

$$\begin{cases} t_1 + t_3 & = 0 \\ t_2 - t_1 & = 0 \\ -t_3 - t_2 & = 0 \end{cases}$$

As mentioned earlier, we can place sensors a road to measure the flow through it. But, we have a limited budget, and we would like to determine all of the flows with the smallest possible number of sensors.

Suppose for the network above we have one sensor reading, $t_1 = 10$. Can we figure out the flows along the other roads? (That is, the values of t_2 and t_3).

(b) Now suppose we have a larger network, as shown in Figure 2.

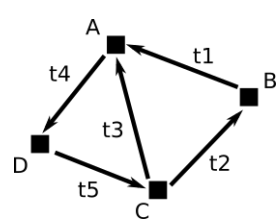

Figure 2: A larger road network.

We would again like to determine the traffic flows on all roads, using measurements from some sensors.

A Berkeley student claims that we need two sensors placed on the roads AD and BA. A Stanford student claims that we need two sensors placed on the roads CB and BA. Is it possible to determine all traffic flows with the Berkeley student's suggestion? How about the Stanford student's suggestion?

(c) Suppose we write the traffic flow on all roads as a vector $\vec{t} = \begin{bmatrix} t_1 \\ t_2 \\ t_3 \\ t_4 \\ t_5 \end{bmatrix}$. Show that the set of valid flows (which satisfy the conservation constraints) form a subspace. Then, determine the subspace of traffic

flows for the network of Figure 2. Specifically, express this space as the span of two linearly independent vectors.

(Hint: Use the claim of the correct student in the previous part)

(d) We would like a more general way of determining the possible traffic flows in a network. As a first step, let us try to write all the flow conservation constraints (one per intersection) as a matrix equation. Find a (4×5) matrix B such that the equation $B\vec{t} = \vec{0}$:

$$\begin{bmatrix} & & & & \\ & B & & & \\ & & & & \\ & & & & \end{bmatrix} \begin{bmatrix} t_1 \\ t_2 \\ t_3 \\ t_4 \\ t_5 \end{bmatrix} = \begin{bmatrix} 0 \\ 0 \\ 0 \\ 0 \end{bmatrix}$$

represents the flow conservation constraints for the network of Figure 2.

(Hint: Each row is the constraint of an intersection. You can construct B using only $0, 1, -1$ *entries.)*

This matrix is called the *incidence matrix*. What does each row of this matrix represent? What does each column of this matrix represent?

(e) Notice that the set of all vectors $\vec{t}$ which satisfy $B\vec{t} = \vec{0}$ is exactly the nullspace of the matrix B. That is, we can find all valid traffic flows by computing the nullspace of B. Use Guassian Elimination to determine the dimension of the nullspace of B, and compute a basis for the nullspace. (You may use a computer to compute reduced-row-echelon-form). Does this match your answer to part (c)? Can you interpret the dimension of the nullspace of the incidence matrix, for the road networks of Figure 1 and Figure 2?

(f) Now let us analyze general road networks. Say there is a road network graph G, with incidence matrix B_G. If B_G has a k-dimensional nullspace, does this mean measuring the flows along *any* k roads is always sufficient to recover the exact flows? Prove or give a counterexample.

(Hint: Consider the Stanford student.)

(g) Let G be a network of n roads, with incidence matrix B_G that has a k-dimensional nullspace. We would like to characterize exactly when measuring the flows along a set of k roads is sufficient to recover the exact flow along all roads. To do this, it will help to generalize the problem, and consider measuring *linear combinations* of flows. If $\vec{t}$ is a traffic flow vector, assume we can measure linear combinations $\vec{m}_i^T \vec{t}$ for some vectors $\vec{m}_i$. Then making k measurements is equivalent to observing the vector $M\vec{t}$ for some $(k \times n)$ "measurement matrix" M (consisting of rows $\vec{m}_i^T$).

For example, for the network of Figure 2, the measurement matrix corresponding to measuring t_1 and t_4 (as the Berkeley student suggests) is:

$$M = \begin{bmatrix} 1 & 0 & 0 & 0 & 0 \\ 0 & 0 & 0 & 1 & 0 \end{bmatrix}$$

Similarly, the measurement matrix corresponding to measuring t_1 and t_2 (as the Stanford student suggests) is:

$$M = \begin{bmatrix} 1 & 0 & 0 & 0 & 0 \\ 0 & 1 & 0 & 0 & 0 \end{bmatrix}$$

For general networks G and measurements M, give a condition for when the exact traffic flows can be recovered, in terms of the nullspace of M and the nullspace of B_G.

(Hint: Recovery will fail iff there are two valid flows with the same measurements. Can you express this in terms of the nullspaces of M and B_G*?)*

(h) *(Bonus)* Express the condition of the previous part in a way that can be checked computationally. For example, suppose we are given a huge road network G of all roads in Berkeley, and we want to find if our measurements M are sufficient to recover the flows.

(Hint: Consider a matrix U whose columns form a basis of the nullspace of B_G. Then $\{U\vec{x} : \vec{x} \in R^k\}$ is exactly the set of all possible traffic flows. How can we represent measurements on these flows?)

(i) *(Bonus)* If the incidence matrix B_G has a k-dimensional nullspace, does this mean we can always pick a set of k roads such that measuring the flows along these roads is sufficient to recover the exact flows? Prove or give a counterexample.

4. Faerie Mazes

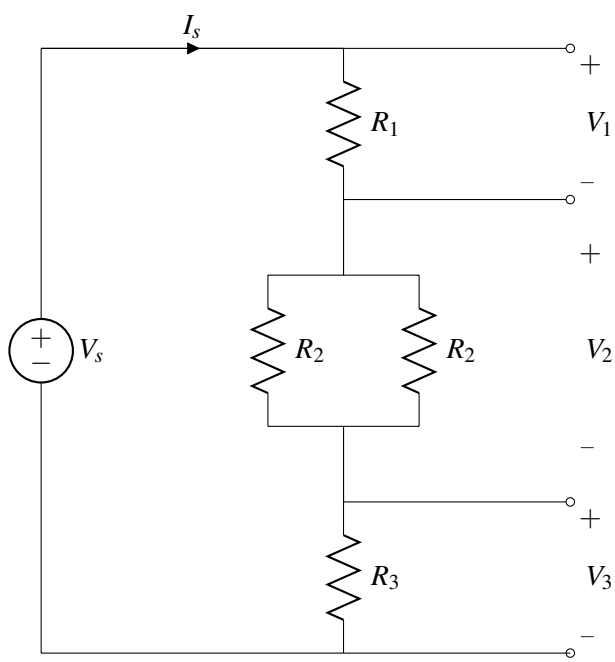

Suppose $R_1 = 10$ Nolans, $R_2 = 20$ Nolans, and $R_3 = 30$ Nolans. Use the units Nolans, Vigors, and $\frac{\text{Imps}}{\text{second}}$. How much Vigor V_s must be provided such that the imp flow is $I = 2\,\frac{\text{Imps}}{\text{second}}$? With this Vigor applied, what are the vigor changes $V_1, V_2,$ and V_3?

5. Midterm Problem 3
Redo Midterm Problem 3.

6. Midterm Problem 4
Redo Midterm Problem 4.

7. Midterm Problem 5
Redo Midterm Problem 5.

8. Midterm Problem 6
Redo Midterm Problem 6.

9. Midterm Problem 7
Redo Midterm Problem 7.

10. **Midterm Problem 8**
    Redo Midterm Problem 8.

11. **Midterm Problem 9**
    Redo Midterm Problem 9.

12. **Your Own Problem** Write your own problem related to this week's material and solve it. You may still work in groups to brainstorm problems, but each student should submit a unique problem. What is the problem? How to formulate it? How to solve it? What is the solution?