EECS 16B Designing Information Devices and Systems II
Spring 2016 Anant Sahai and Michel Maharbiz **Homework 6**

This homework is due March 7, 2016, at Noon.

1. **Homework process and study group**

   Who else did you work with on this homework? List names and student ID's. (In case of hw party, you can also just describe the group.) How did you work on this homework?

2. **Lecture Attendance**

   This question is a student trust-based system for giving credit to those who attend lecture and help the course out by doing so. Lying on this (or any other part of the homework) constitutes academic dishonesty, and more importantly than any academic sanctions, lying would damage your honor and integrity. Be honest. You will carry your honor and integrity with you for the rest of your life, and they are way more important than your GPA.

   Did you attend live lecture this week? (the week you were working on this homework) What was your favorite part? Was anything unclear? Answer for each of the subparts below. If you only watched on YouTube, write that for partial credit.

   (a) Monday lecture
   (b) Wednesday lecture
   (c) Friday lecture

3. **Charge sharing, revisited**

   Consider the following circuit which features two capacitors connected together with a resistor.

   With the exception of the resistor in between, you should recognize this as the idea of charge sharing from EE 16A which you used in your capacitive touchscreen lab. In this problem, we will take a more in-depth look at this charge sharing circuit to make it more rigorous and intuitive on a circuit level.

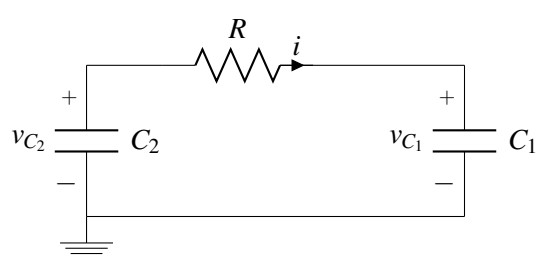

   We will analyze this circuit for $t \geq 0$. The initial voltage across C_2 is given as V_2, and the initial voltage across C_1 is given as V_1. In other words:

$$v_{C_1}(t \leq 0) = V_1$$
$$v_{C_2}(t \leq 0) = V_2$$

(a) Determine a formula for $v_{C_1}(t)$ for $t \geq 0$.

(b) Determine a formula for $v_{C_2}(t)$ for $t \geq 0$. (Hint: use the previous part of this problem.)

(c) Determine a formula for the current $i(t)$ through the resistor for $t \geq 0$.

(d) Check your work by showing that at $t = 0$, the initial conditions given at the start of this problem are satisfied. (In other words, show that $v_{C_1}(t = 0) = V_1$ and that $v_{C_2}(t = 0) = V_2$.

(e) At steady-state ($t \to \infty$), what happens to the voltages across the two capacitors? Is this consistent with what you learned in EE 16A?

(f) Sketch the two voltages over time on the same chart.

(g) Is there any current flowing at steady-state? Why or why not?

(h) *(Bonus)* How much energy is lost (i.e. dissipated through the resistor) by the end after executing this charge sharing scheme?

4. From Transistors to Inverter

The following circuit is an inverter built with one pMOS and one nMOS transistor. We assume V_{out} is connected to the input of another identical inverter (not shown). We also assume there is a capacitance connected between V_{out} and GND. In real transistors, this capacitance arises from a combination of capacitances contributed by the transistors of both the inverter in question and any inverters connected to the output. For the moment, we'll just call this capacitance C_L (for load). The resistances associated with the pMOS and nMOS are R_{onP} and R_{onN} , respectively. Let the threshold voltage of the pMOS be V_{tp}, while that for the nMOS be V_{tn}. We will now model the action of the inverter as an RC circuit with two switches controlled by V_{in} as what we did in lectures.

(a) For starters, what are the on-off conditions of the two switches? Please draw the RC circuit modeling this inverter.

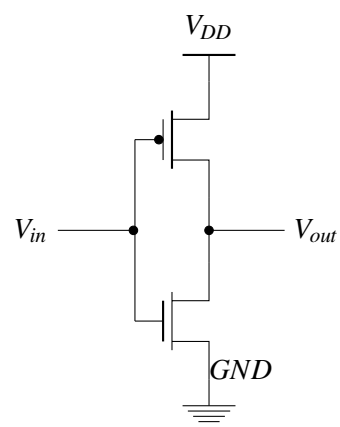

(b) Assume $V_{in} = V_{DD}$ for $t < 0$, and $V_{in} = 0$ for $t \geq 0$. In other words, we are assuming the input to our inverter can switch states infinitely fast (this is not true in real life, but gives us a good lower bound on how fast an inverter can switch). How much energy does it take to fully charge C_L?

(c) Given the same condition as in (b), write down the differential equation that describes $V_{out}(t)$ for $t \geq 0$.

(d) What is the solution to this differential equation? Plot $V_{out}(t)$ for $t > 0$.

(e) The term *propagation delay* is used to describe the amount of time it takes between when the input reaches $\frac{V_{DD}}{2}$ and when the output reaches $\frac{V_{DD}}{2}$. Calculate the propagation delay for our inverter above (keep in mind that the input to our inverter changes instantly). Is propagation delay a function of V_{DD}?

(f) Now consider a serial chain of inverters, each driving the one before it. If we assume that $|V_{tn}| = |V_{tp}| = \frac{V_{DD}}{2}$ what is the propagation delay for one of these inverters, given (d) and (e)? (If you like, ignore the first inverter and assume it is driven by an input as in (a)). Here we let $R_{onP} = R_{onN} = R$.

(g) Now let's consider the following scenario: there are N inverters on the chip in your cell phone. It takes **E** Joules of energy to charge all of the inverters at once (from zero to V_{DD}). What is the value of C_L?

(h) Here we interpret a voltage V as logic "1" when $V > \frac{V_{DD}}{2}$, and logic "0" when $V < \frac{V_{DD}}{2}$. Let's assume the maximum frequency, f, at which an inverter can switch back and forth between logic "0" and logic "1" at the output is the inverse of the propagation delay (i.e. we can only switch as fast as one propagation delay). Find an expression that links f, C_L, and R.

5. Matrix differential equations

In this problem, we consider ordinary differential equations which can be written in the following form

$$\begin{pmatrix} x'(t) \\ y'(t) \end{pmatrix} = A \begin{pmatrix} x(t) \\ y(t) \end{pmatrix}, \tag{1}$$

where x, y are variables depending on t, $x' = \frac{dx}{dt}$, $y' = \frac{dy}{dt}$, and A is a 2×2 matrix with constant coefficients. We call (1) a matrix differential equation.

(a) Suppose we have a system of ordinary differential equations

$$x' = 8x + 7y \tag{2}$$
$$y' = -4x - 3y \tag{3}$$

Write this in the form of (1).

(b) Compute the eigenvalues and eigenvectors of the matrix A from the previous part.

(c) We claim that the solution for $x(t), y(t)$ is of the form

$$\begin{pmatrix} x(t) \\ y(t) \end{pmatrix} = c_0 e^{\lambda_0 t} \vec{v}_0 + c_1 e^{\lambda_1 t} \vec{v}_1,$$

where c_0, c_1 are constants, and λ_0, λ_1 are the eigenvalues of A with eigenvectors $\vec{v}_0, \vec{v}_1$ respectively. Suppose that the initial conditions are $x(0) = 1, y(0) = 1$. Solve for the constants c_0, c_1.

(d) Verify that the solution for $x(t), y(t)$ found in the previous part satisfies the original system of differential equations (2), (3).

(e) We now apply the method above to solve a second order ordinary differential equation. Suppose we have the system

$$z''(t) - 5z'(t) + 6z(t) = 0 \tag{4}$$

Write this in the form of (1), by using the change of variables $x(t) = z(t)$, $y(t) = z'(t)$.

(f) Solve the system in (4) with the initial conditions $z(0) = 1$, $z'(0) = 1$, using the method developed in parts (b) and (c).

6. Your Own Problem

Write your own problem related to this week's material and solve it. You may still work in groups to brainstorm problems, but each student must submit a unique problem. What is the problem? How to formulate it? How to solve it? What is the solution?

Contributors:

- Edward Wang.
- Yu-Yun Dai.
- Lynn Chua.