EE 16B Lecture Notes

Adjusting Stability of a Controls System

March 30, 2016

<u>Background</u>

As discussed previously, we know the following about observability:

$$\vec{x}(t+1) = A\vec{x}(t) + B\vec{u}(t)$$
$$\vec{y}(t) = C\vec{x}(t)$$

in which we are given $\vec{x}_0$ and $C, CA, CA^2, \ldots, CA^{n-1}$.

If rank $\begin{bmatrix} C \\ CA \\ CA^2 \\ \ldots \\ CA^{n-1} \end{bmatrix} = n$, then the system is observable

We take this example discussed from a previous lecture, and think about it in terms of observation:

$$\vec{x}(t+1) = \begin{bmatrix} 1 & 1 \\ 0 & 2 \end{bmatrix} \vec{x}(t) + \begin{bmatrix} 0 \\ 1 \end{bmatrix} u(t)$$
$$\vec{x}_0 = \begin{bmatrix} 1 \\ 0 \end{bmatrix}$$

Let C be the observation matrix of the first state $\begin{bmatrix} 1 & 0 \end{bmatrix}$, then CA=$\begin{bmatrix} 1 & 0 \end{bmatrix} \begin{bmatrix} 1 & 1 \\ 0 & 2 \end{bmatrix}$=$\begin{bmatrix} 1 & 1 \end{bmatrix} \ldots$

C and CA are linearly independent

Let us try another check of this matrix as a more explicit example:

$$\vec{x}_0 = \begin{bmatrix} a \\ b \end{bmatrix}$$
$$y(0) = a$$
$$\vec{x}_0 = \begin{bmatrix} 1 & 1 \\ 0 & 2 \end{bmatrix} \begin{bmatrix} a \\ b \end{bmatrix} = \begin{bmatrix} a+b \\ 2b \end{bmatrix}$$
$$y(1) = a + b$$

Question: If you know the initial condition and evolution matrix and inputs of a system, do you need to observe anything at all? Mathematically, there is no need to observe anything. However, realistically, you definitely need observations, and use those to develop a controls system.

<u>Main Topic of Today</u>

Let's say we have a system:

$$\vec{x}(t+1) = A\vec{x}(t) + B\vec{u}(t)$$

in which A is a matrix and B is a vector.

We know that this system is stable in open loop if all the eigenvalues of A are inside the unit circle, $|\lambda| < 1$.

Open Loop vs. Closed Loop: Block Diagram Views

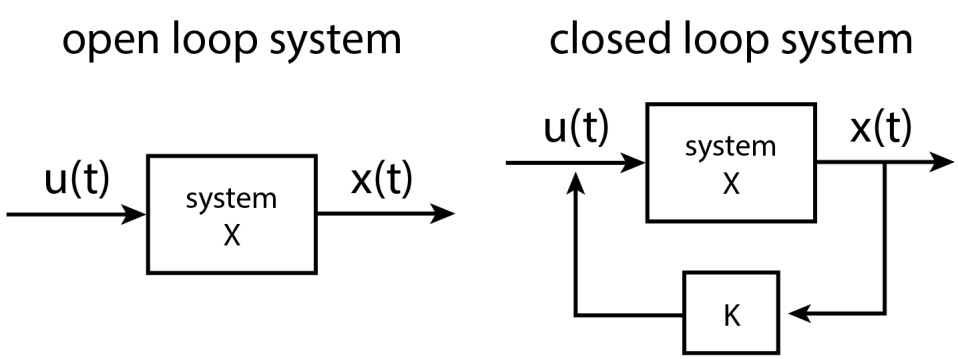

In an open loop system, inputs are chosen without looking at the state of the system. In a closed loop system, the input is chosen with the feedback of the current state of the system

With this given, we can take a system that is unstable with eigenvalues wherever and you can use matrix K to move all λ to wherever you want.

In the context of an example: $\vec{x}(t+1) = \begin{bmatrix} 1 & 1 \\ 0 & 2 \end{bmatrix} \vec{x}(t) + \begin{bmatrix} 0 \\ 1 \end{bmatrix} u(t)$

Upon looking at the matrix A, we see it is a triangular matrix and thus the eigenvalues lie on the diagonal. Therefore, the eigenvalues of A are 1 and 2, and thus it does not satisfy our earlier criteria of stability.

We choose K so the solution satisfies stability. Let $u(t) = K\vec{x}(t)$ and $K = \begin{bmatrix} f_1 & f_2 \end{bmatrix}$

$$\vec{x}(t+1) = \begin{bmatrix} 1 & 1 \\ 0 & 2 \end{bmatrix} \vec{x}(t) + \begin{bmatrix} 0 \\ 1 \end{bmatrix} \begin{bmatrix} f_1 & f_2 \end{bmatrix} \vec{x}(t)$$
$$\vec{x}(t+1) = \left(\begin{bmatrix} 1 & 1 \\ 0 & 2 \end{bmatrix} + \begin{bmatrix} 0 \\ 1 \end{bmatrix} \begin{bmatrix} f_1 & f_2 \end{bmatrix} \right) \vec{x}(t)$$
$$\vec{x}(t+1) = \left(\begin{bmatrix} 1 & 1 \\ 0 & 2 \end{bmatrix} + \begin{bmatrix} 0 & 0 \\ f_1 & f_2 \end{bmatrix} \right) \vec{x}(t)$$
$$\vec{x}(t+1) = \begin{bmatrix} 1 & 1 \\ f_1 & 2+f_2 \end{bmatrix} \vec{x}(t)$$

From this, we can find an appropriate choice of f_1 and f_2, allowing you to move eigenvalues to wherever you want.

$$\det\left(\begin{bmatrix} 1 & 1 \\ f_1 & f_2+2 \end{bmatrix} - \begin{bmatrix} \lambda & 0 \\ 0 & \lambda \end{bmatrix} \right) = (1-\lambda)(2+f_2-\lambda) - f_1 = \lambda^2 + (-3-f_2)\lambda + (2+f_2-f_1)$$

We can set $\lambda^2 + (-3-f_2)\lambda + (2+f_2-f_1)$ to whatever polynomial you want, then solve the system of equations for f_1, f_2.

So, if you say, "I want $\underline{\lambda_1, \lambda_2}$ as the eigenvalues"

Then we set $\lambda^2 + (-3-f_2)\lambda + (2+f_2-f_1)$ equal to the polynomial generated by the desired eigenvalues.

$$\lambda^2 + (-3-f_2)\lambda + (2+f_2-f_1) = (\lambda-\lambda_1)(\lambda-\lambda_2) = \lambda^2 + (-\lambda_1-\lambda_2)\lambda + \lambda_1\lambda_2$$

Solve:

$$\begin{aligned} -3 - f_2 &= -\lambda_1 - \lambda_2 \\ 2 + f_2 - f_1 &= -\lambda_1\lambda_2 \end{aligned}$$

For $\lambda_1 = 1/2, \lambda_2 = 0$, we find that $f_1 = -5/2, f_2 = -1/2$

Check:

$$\begin{bmatrix} 1 & 1 \\ 0 & 2 \end{bmatrix} + \begin{bmatrix} 0 \\ 1 \end{bmatrix} \begin{bmatrix} -1/2 & -5/2 \end{bmatrix} = \begin{bmatrix} 1 & 1 \\ -1/2 & -1/2 \end{bmatrix}$$

$\begin{bmatrix} 1 & 1 \\ -1/2 & -1/2 \end{bmatrix}$ is stable