EE C245 – ME C218
Introduction to MEMS Design
Fall 2007

Prof. Clark T.-C. Nguyen

Dept. of Electrical Engineering & Computer Sciences
University of California at Berkeley
Berkeley, CA 94720

Lecture 27: Noise

Announcements

- Project emails
  - Main theme: do micro-to-macro comparison using a table

State-of-the-Art

	Macro	Micro
Volume	10,000 cc	2cc

- Project Outbrief sign-up sheets will be on my door by this afternoon
- HW#6:
  - Now due this Thursday
  - Let's go through it since there's been no discussion section for the past two weeks

Announcements

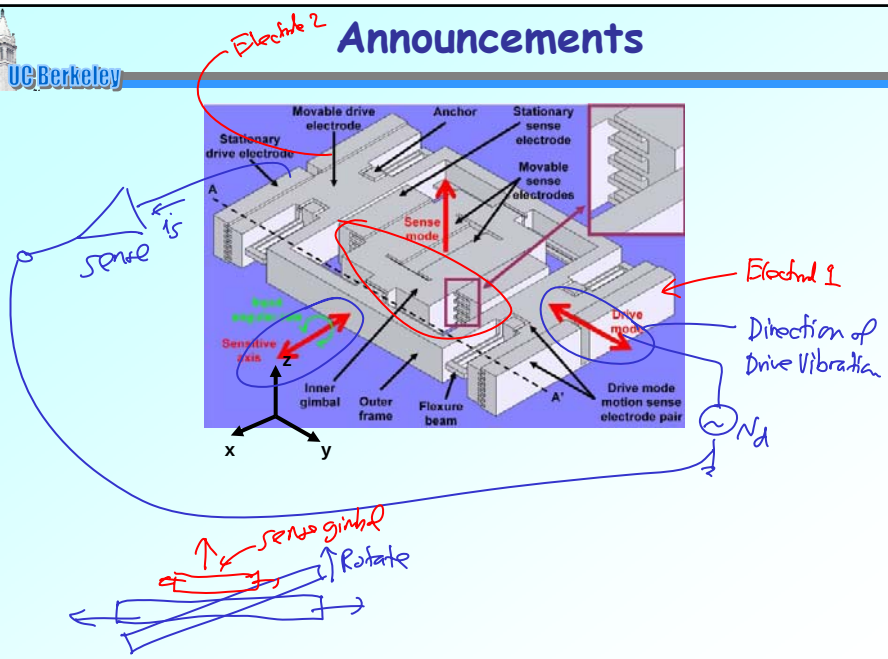

HW#6 (cont)

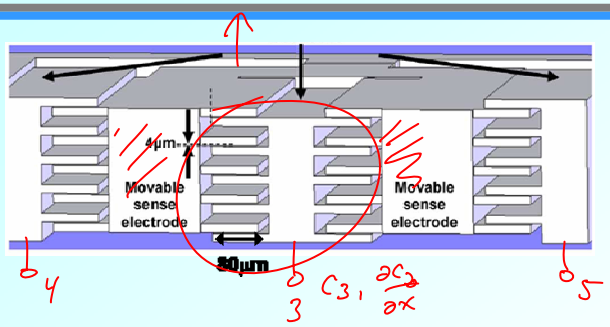

- SPICE
  - Why use it? Why make equivalent electrical circuits for mechanical devices?
  - Answer: Noise analysis is needed to determine the minimum detectable signal for a MEMS-based sensor
  - Simulink will not do this nearly as conveniently

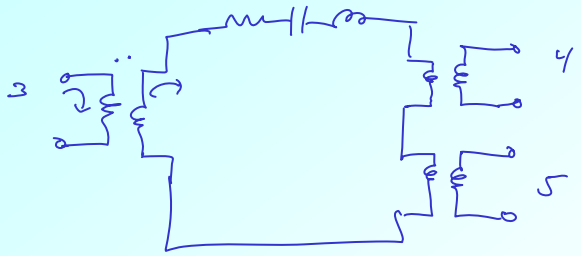

Lecture Outline

- Reading: Senturia Chpt. 16, 19
- Lecture Topics:
  - Non-Ideal Op Amps
    - Input Offset Voltage, V_{OS}
  - Determining Sensor Resolution
    - Noise
    - Noise Sources
    - Equivalent Input-Referred Noise Sources
    - Example: Gyro MDS Calculation

Back to Op Amp Non-Idealities

Actual Op Amps Are Not Ideal

- Actual op amps, of course, are not ideal; rather, they …
  - Generate noise
  - Have finite gain, A_o
  - Have finite bandwidth, ω_b
  - Have finite input resistance, R_i
  - Have finite input capacitance, C_i
  - Have finite output resistance, R_o
  - Have an offset voltage V_{OS} between their (+) and (-) terminals
  - Have input bias currents
  - Have an offset I_{OS} between the bias currents into the (+) and (-) terminals
  - Have finite slew rate
  - Have finite output swing (governed by the supply voltage used, -L to +L)
- And what's worse: All of the above can be temperature (or otherwise environmentally) dependent!

Input Offset Voltage V_{OS}

Input Offset Voltage, V_{OS}:

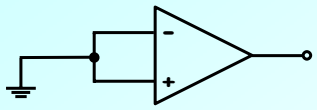

$$v_0 = A(v_+ - v_-)$$

Ideal case: $v_0 = 0$

Reality: $v_0 \neq 0$ (usually, $v_0 = L^+$ or L^- : it rails out!)

Why? Internal mismatches within the op amp → cause a dc offset. Model this with an equivalent input offset voltage V_{OS}.

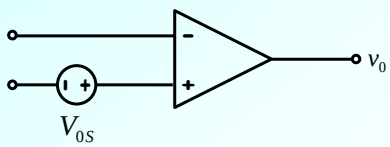

Typically, V_{OS} = 1mV – 5mV

Effect of V_{OS} on Op Amp Circuits

Example: Non-Inverting Amplifier

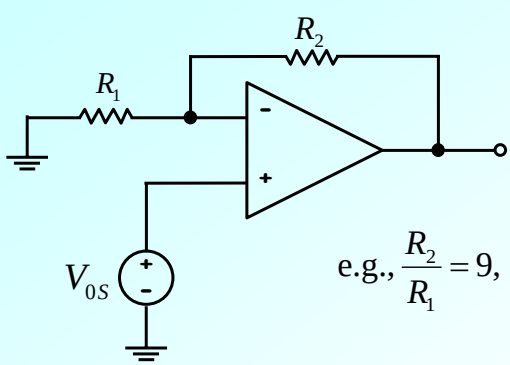

$$V_0 = V_{OS}\left(1 + \frac{R_2}{R_1}\right)$$

$$\text{e.g., } \frac{R_2}{R_1} = 9, \quad V_{OS} = 5mV \rightarrow V_0 = 50mV$$

(not so bad …)

Effect of V_{0S} on Op Amp Circuits (cont.)

Example: Integrator

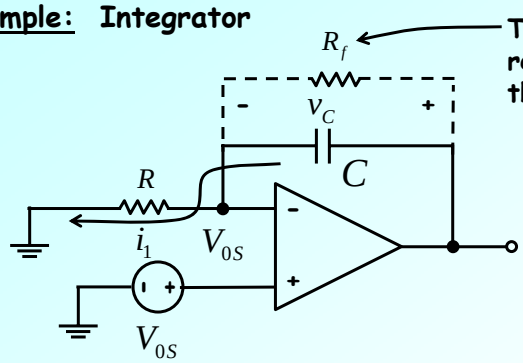

To fix this, place a resistor in shunt with the C → then:

$$v_0 = V_{0S}\left(1+\frac{R_f}{R}\right)$$

$$v_0 = V_{0S} + \frac{1}{C}\int_0^t i_1 dt$$

$$= V_{0S} + \frac{1}{C}\int_0^t \frac{V_{0S}}{R} dt$$

$$= V_{0S}\left(1+\frac{t}{RC}\right) + v_C\big|_{t=0}$$

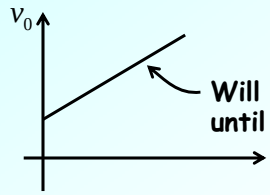

Will continue to increase until op amp saturates

Noise

Determining Sensor Resolution

Minimum Detectable Signal (MDS)

- Minimum Detectable Signal (MDS): Input signal level when the signal-to-noise ratio (SNR) is equal to unity

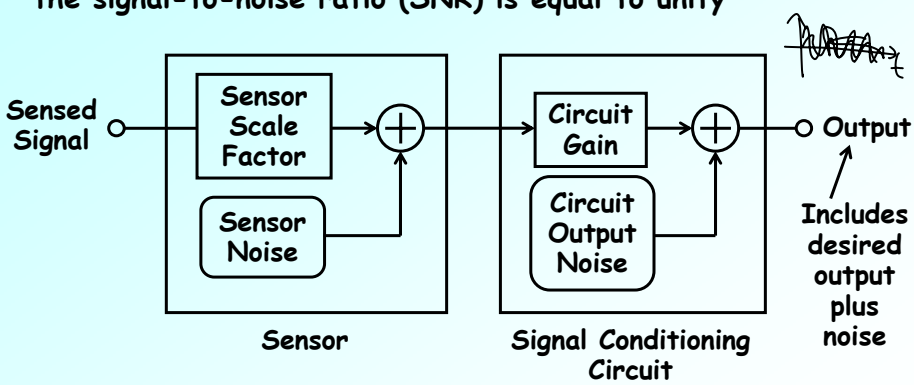

- The sensor scale factor is governed by the sensor type
- The effect of noise is best determined via analysis of the equivalent circuit for the system

Noise

Noise

- Noise: Random fluctuation of a given parameter I(t)
- In addition, a noise waveform has a zero average value

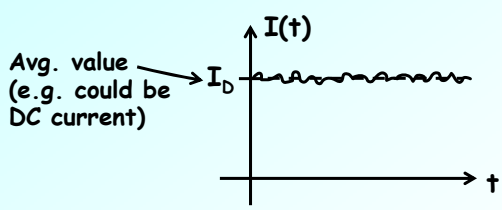

- We can't handle noise at instantaneous times
- But we can handle some of the averaged effects of random fluctuations by giving noise a power spectral density representation
- Thus, represent noise by its mean-square value:

Let $i(t) = I(t) - I_D$

Then $\overline{i^2} = \overline{(I - I_D)^2} = \lim_{T \to \infty} \frac{1}{T} \int_0^T |I - I_D|^2 dt$

Noise Spectral Density

- We can plot the spectral density of this mean-square value:

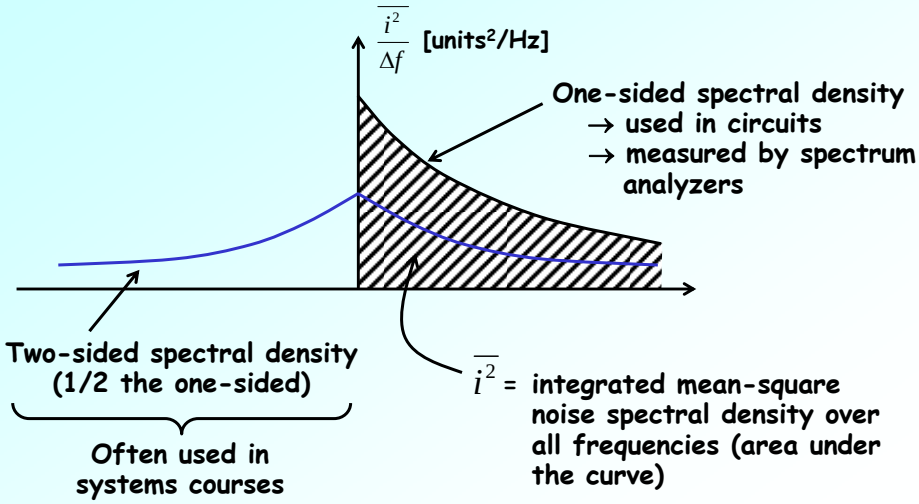

Circuit Noise Calculations

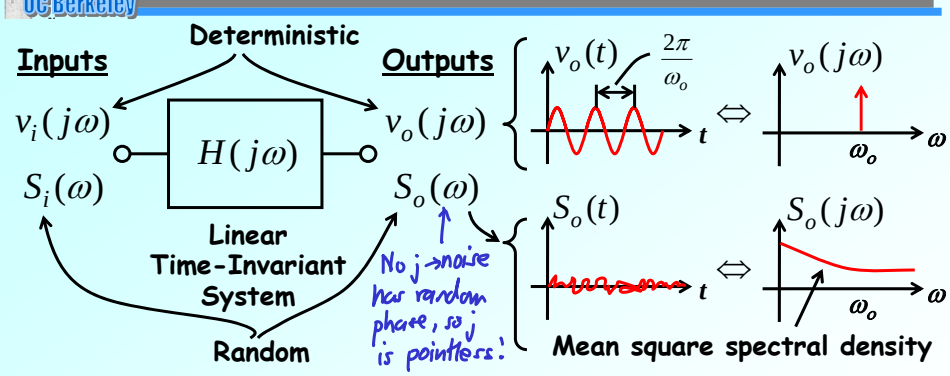

- **Deterministic:** $v_o(j\omega) = H(j\omega)v_i(j\omega)$
- **Random:** $S_o(\omega) = \left[H(j\omega)H^*(j\omega)\right]S_i(\omega) = \left|H(j\omega)\right|^2 S_i(\omega)$

$$\sqrt{S_o(\omega)} = \left|H(j\omega)\right|\sqrt{S_i(\omega)} \longrightarrow \text{How is it we can do this?}$$

Root mean square amplitudes

Handling Noise Deterministically

- Can do this for noise in a tiny bandwidth (e.g., 1 Hz)

$$\frac{\overline{v_{n1}^2}}{\Delta f} = S_1(f) \longrightarrow v_{n1} = \sqrt{S_1(f)\cdot B}$$

→ Can approximate this by a sinusoidal voltage generator (especially for small B, say 1 Hz)

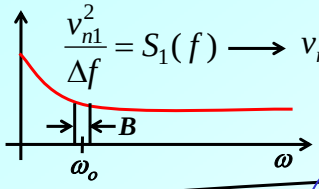

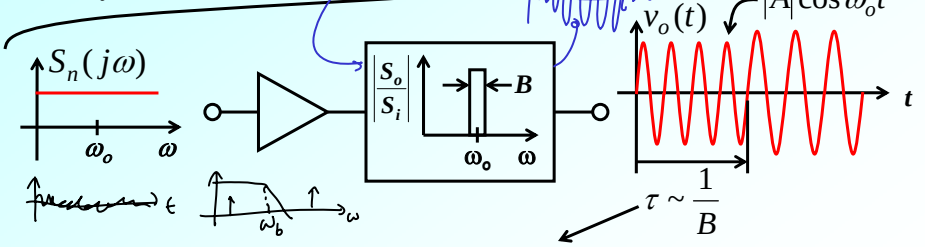

[This is actually the principle by which oscillators work → oscillators are just noise going through a tiny bandwidth filter]

Why? Neither the amplitude nor the phase of a signal can change appreciably within a time period 1/B.