EE C245 – ME C218
Introduction to MEMS Design
Fall 2007

Prof. Clark T.-C. Nguyen

Dept. of Electrical Engineering & Computer Sciences
University of California at Berkeley
Berkeley, CA 94720

Discussion: Review of Op Amps

Lecture Outline

- Reading: Senturia Chpt. 14
- Lecture Topics:
  - Ideal Op Amps
  - Non-Ideal Op Amps
    - Finite gain & bandwidth
    - Input offset voltage

Ideal Operational Amplifiers

Ideal Op Amp

- **Equivalent Circuit of an Ideal Op Amp:**

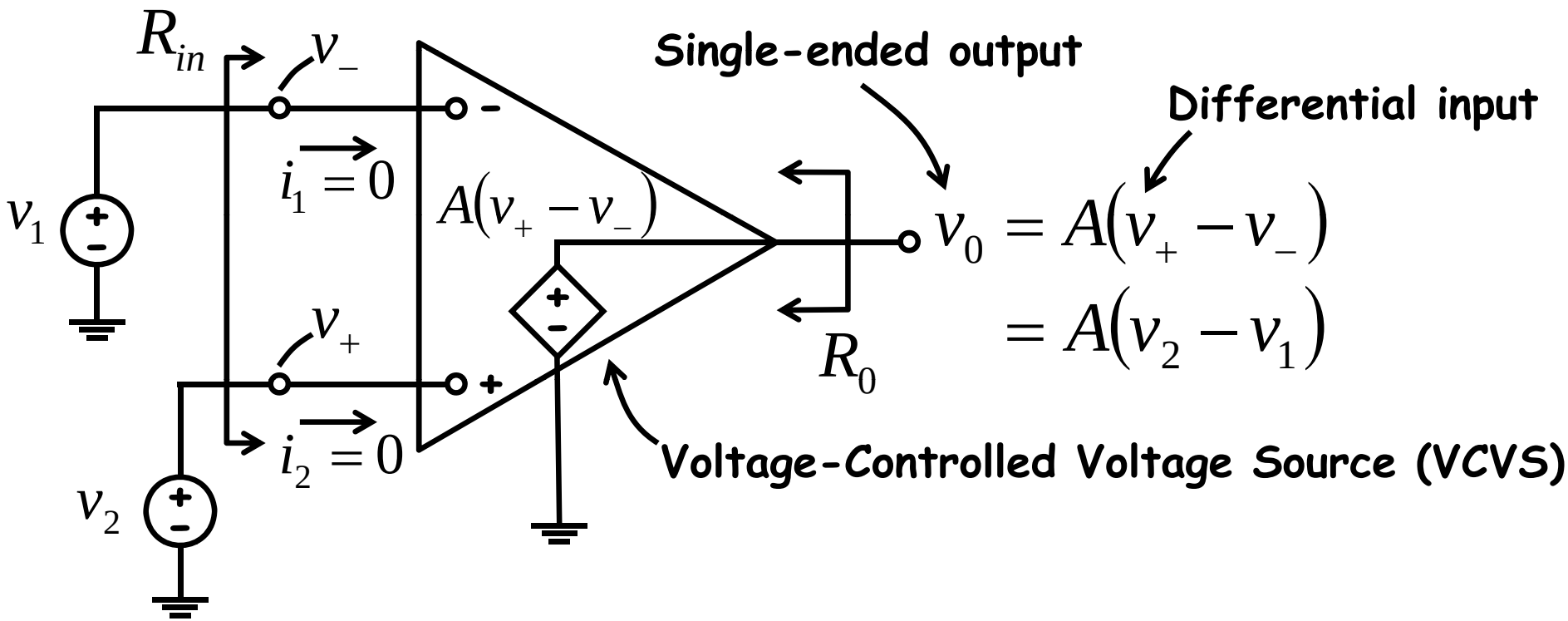

- **Properties of Ideal Op Amps:**

1. $R_{in} = \infty \longrightarrow$ 4. $i_+ = i_- = 0$
2. $R_0 = 0$
3. $A = \infty \longrightarrow$ 5. $v_+ = v_-$, assuming $v_0 = \text{finite}$ **Why?**

Ideal Op Amp (cont)

- **Properties of Ideal Op Amps:**

1. $R_{in} = \infty \longrightarrow$ 4. $i_+ = i_- = 0$
2. $R_0 = 0$
3. $A = \infty \longrightarrow$ 5. $v_+ = v_-$, assuming $v_0 = \text{finite}$

Why? Because for

$$\infty(v_+ - v_-) = v_0 = \text{finite}$$

$$\therefore \underbrace{v_+ - v_-}_{\frac{v_0}{\infty} \Rightarrow \text{virtual short circuit (virtual ground)}} = 0 \rightarrow v_+ = v_-$$

- **Big assumption!** $(v_0 = \text{finite})$
- **How can we assume this? We can assume this only when there is an appropriate negative feedback path!**

Negative Feedback

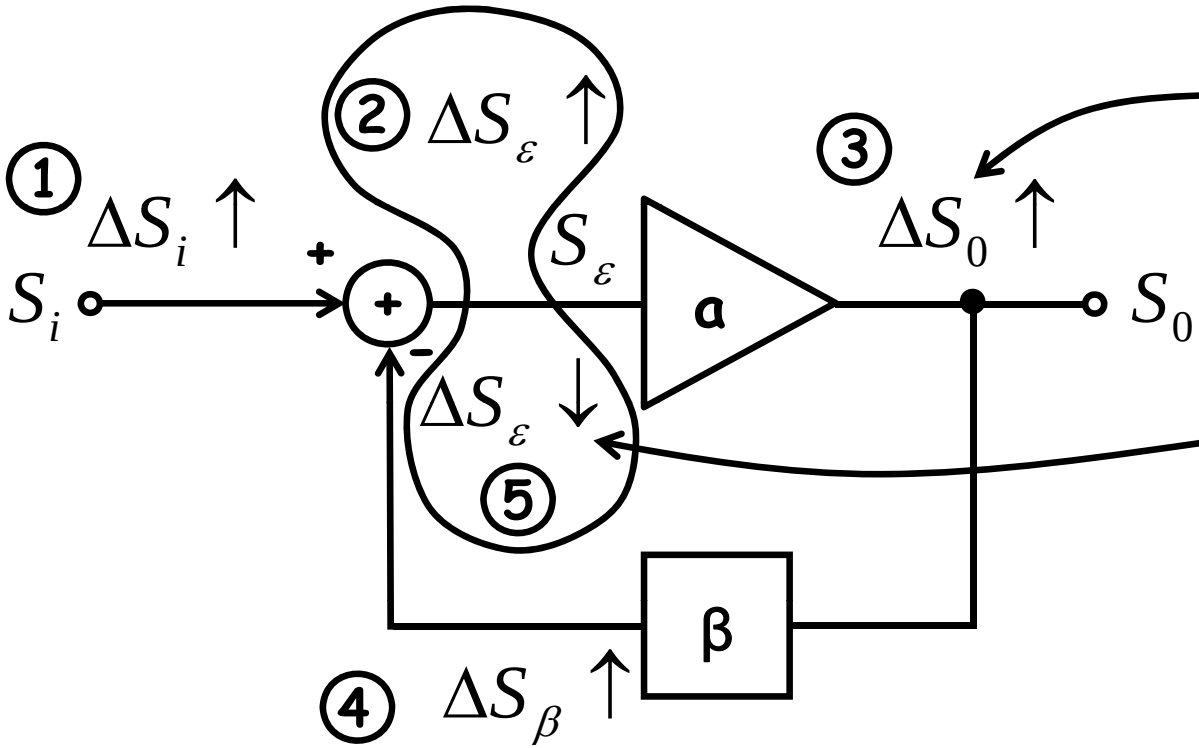

Where S could be a current, voltage, displacement, etc.,…

Negative feedback acts to oppose or subtract from input.

$$\left.\begin{aligned} S_0 &= aS_\varepsilon \\ S_\varepsilon &= S_i - \beta S_0 \end{aligned}\right\} \longrightarrow \begin{aligned} S_0 &= a(S_i - \beta S_0) \\ S_0(1+a\beta) &= aS_i \end{aligned} \rightarrow \boxed{\frac{S_0}{S_i} = \frac{a}{1+a\beta}}$$

Overall transfer function.

(When there is negative FB around the amplifier.)

$$[a \to \infty] \Rightarrow \frac{S_0}{S_i} \approx \frac{a}{a\beta} = \frac{1}{\beta} = \text{finite!} \quad \therefore S_0 = \frac{1}{\beta} S_i = \text{finite!}$$

Negative Feedback

- <u>Comments</u>:
  1. Negative FB can insure S_0 = finite even with $a = \infty$.
  2. Overall gain dependent (or overall T.F.) dependent only on external components. (e.g., β).
  3. Overall (Closed-loop) gain (S_o/S_i) is independent of amplifier gain a.
     - → Very important, since amplifiers using transistors can be designed to have large gain, but it's hard to get an exact gain. i.e., if you're shooting for a = 50,000, you might get 47,000 or 60,000 instead.
     - → Comment 3 makes this less consequential.

Positive Feedback

- Contrast with <u>Positive Feedback</u>:

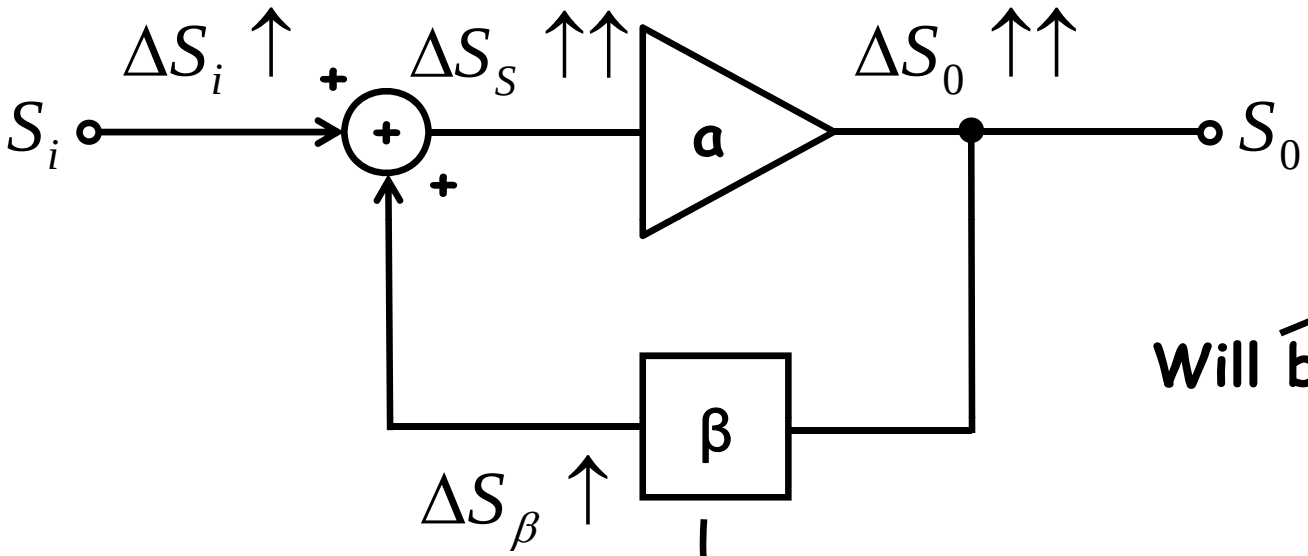

Output blows up! (for aβ > 1)

Will be the case for a = ∞.

If β is a bandpass biquad transfer function → get oscillation at the resonance frequency

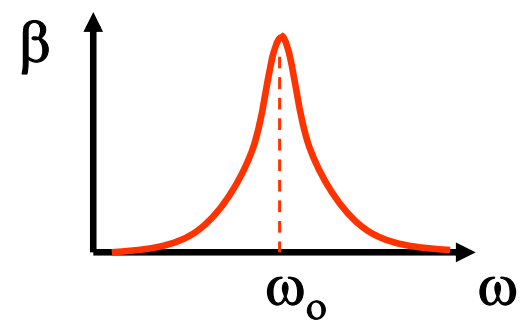

- But for a bounded, controllable function, need negative FB around the op amp

Inverting Amplifier

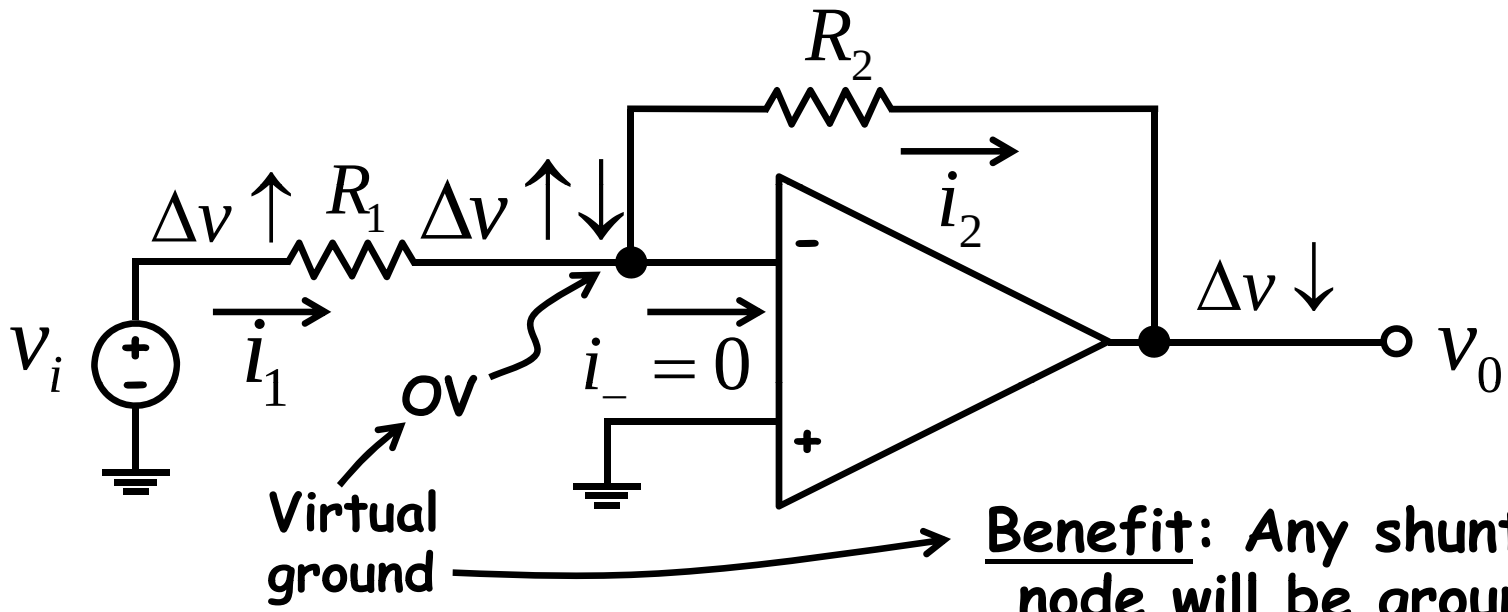

Benefit: Any shunt C at this node will be grounded out.

1. Verify that there is negative FB.
2. $\therefore v_0 = \text{finite} \rightarrow v_+ = v_- \rightarrow$ node attached to (-) terminal is virtual ground.
3. $i_- = 0 \;\therefore\; i_1 = i_2$

NOTE: Gain dependent only on R_1 & R_2 (external components), not on the op amp gain.

$$\left.\begin{aligned} i_1 &= \frac{v_i - 0}{R_1} = \frac{v_i}{R_1} = i_2 \\ v_0 &= 0 - i_2 R_2 = -i_2 R_2 \end{aligned}\right\} \Rightarrow v_0 = -\left(\frac{v_i}{R_1}\right) R_2 = -\frac{R_2}{R_1} v_i \quad \therefore \boxed{\frac{v_0}{v_i} = -\frac{R_2}{R_1}}$$

Flip the Op Amp Around

- Put the feedback around the (+) terminal and see what happens

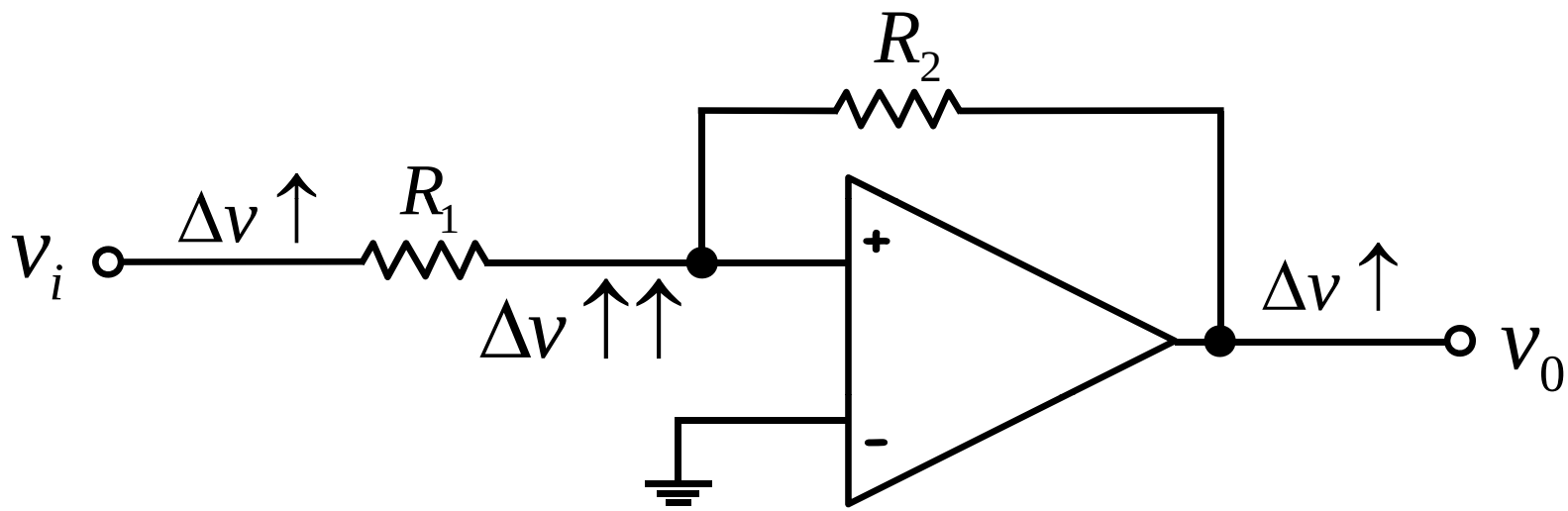

- This is not (-) FB $\therefore\ v_0 \neq \text{finite}, v_+ \neq v_-$
  - Cannot analyze using the ideal op amp method
  - Circuit will "rail out"

$$v_0 = L^+ \text{ or } L^- \text{ depending on initial conditions} \begin{cases} v_+ = (+) \rightarrow L^+ \\ v_+ = (-) \rightarrow L^- \end{cases}$$

Transresistance Amplifier

- Take R_1 away

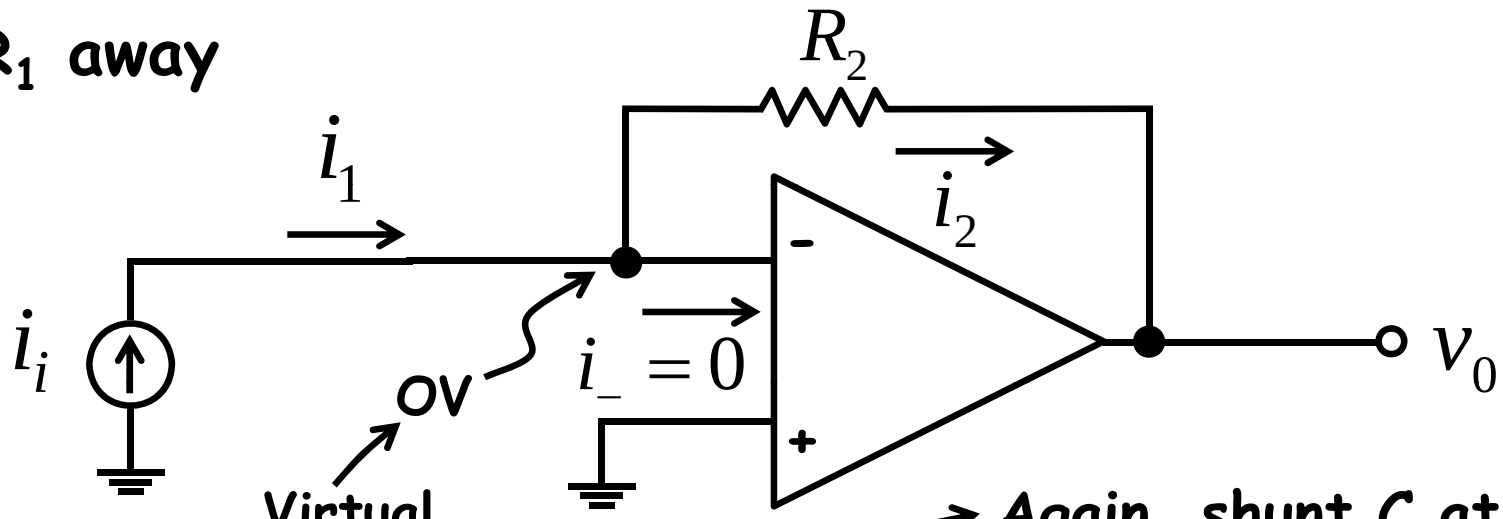

Again, shunt C at this node will be grounded out.

1. Verify that there is neg. FB → yes, since same FB as inverting amplifier
2. Thus, v_o = finite → $v_+ = v_-$ → (-) terminal is virtual ground
3. $i_- = 0 \rightarrow i_1 = i_2$

$$v_0 = -i_2 R_2 = -i_i R_2 \quad \Rightarrow \quad \boxed{\frac{v_0}{i_i} = -R_2}$$

An inverting amplifier is just a transresistance amplifier with an R_1 to convert voltage to current!

Integrator

- Replace R_2 with C_2

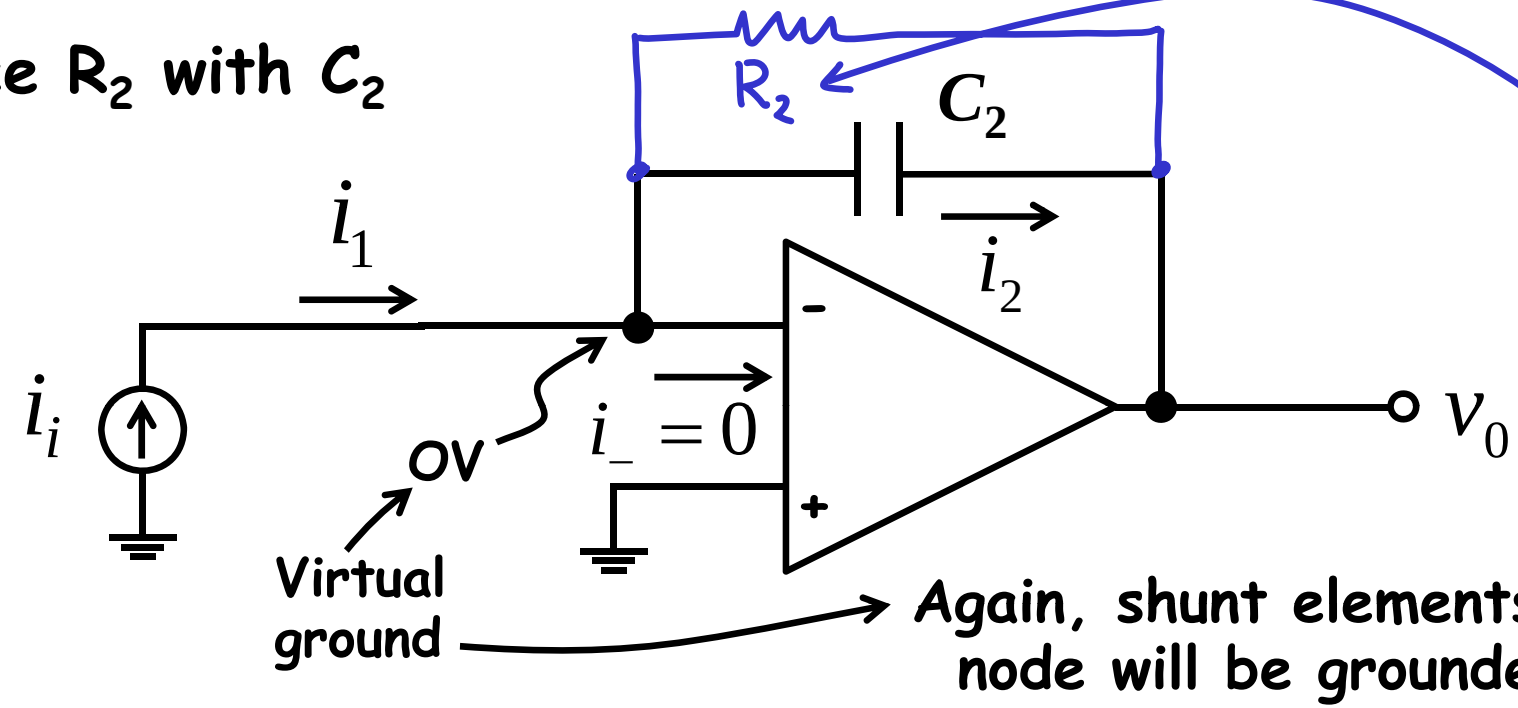

Again, shunt elements at this node will be grounded out.

1. Verify that there is neg. FB → need a large resistor R_2 to DC connect the output and (-) terminal
2. With R_2, v_o = finite → $v_+ = v_-$ → (-) terminal = virtual gnd
3. $i_- = 0 \rightarrow i_1 = i_2$

$$v_0 = -\frac{i_2}{sC_2} = -\frac{i_i}{sC_2} \Rightarrow \boxed{\frac{v_0}{i_i} = -\frac{1}{sC_2}}$$

Non-Inverting Amplifier

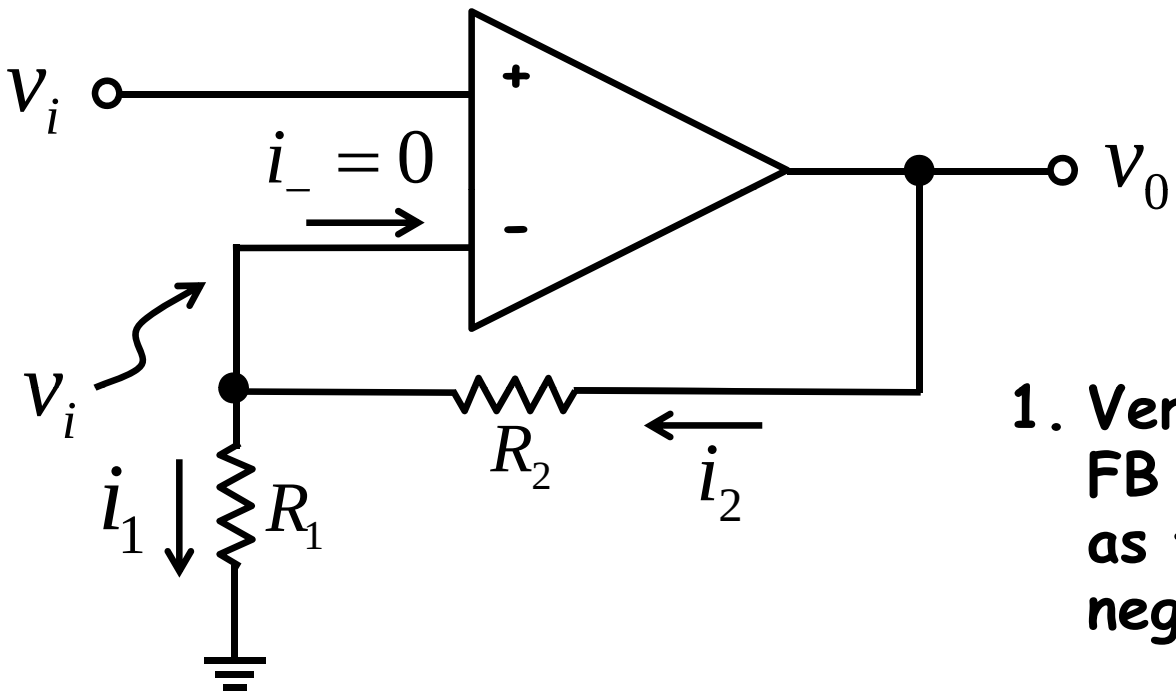

1. Verify that there is negative FB → same feedback circuit as for inverting amplifier, so neg. FB

2. $\therefore v_0 = \text{finite} \rightarrow v_+ = v_-$ $\qquad i_1 = \dfrac{v_i}{R_1} = i_2$

3. Analysis:

$$\left.\begin{aligned} & i_- = 0 \;\therefore\; i_1 = i_2 \\ & v_0 = i_1 R_1 + i_2 R_2 = \frac{v_i}{R_1}\left(R_1 + R_2\right) \end{aligned}\right\} \Rightarrow \boxed{\frac{v_0}{v_i} = 1 + \frac{R_2}{R_1}}$$

Again, gain depends only on R_1 & R_2 (external or ratioed components), not on the op amp gain.

Unity Gain Buffer

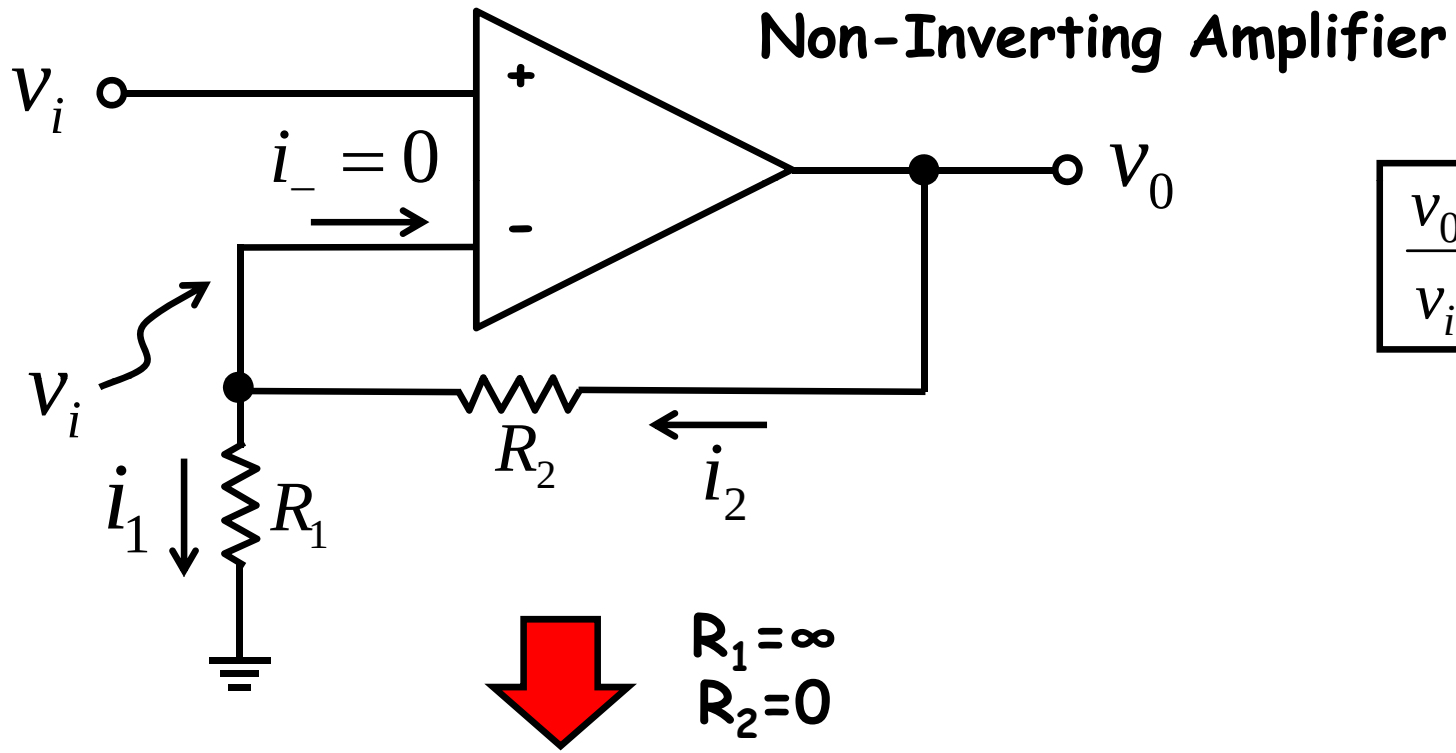

$$\frac{v_0}{v_i} = 1 + \frac{R_2}{R_1}$$

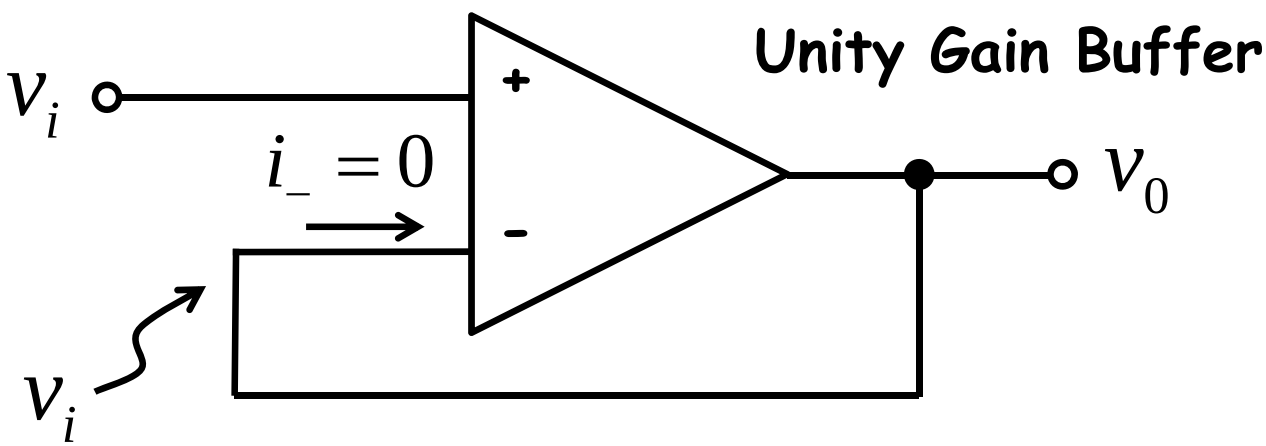

$$\frac{v_0}{v_i} = 1$$

Non-Ideal Operational Amplifiers

Actual Op Amps Are Not Ideal

- Actual op amps, of course, are not ideal; rather, they …
  - Generate noise
  - Have finite gain, A_o
  - Have finite bandwidth, ω_b
  - Have finite input resistance, R_i
  - Have finite input capacitance, C_i
  - Have finite output resistance, R_o
  - Have an offset voltage V_{OS} between their (+) and (-) terminals
  - Have input bias currents
  - Have an offset I_{OS} between the bias currents into the (+) and (-) terminals
  - Have finite slew rate
  - Have finite output swing (governed by the supply voltage used, -L to +L)
- And what's worse: All of the above can be temperature (or otherwise environmentally) dependent!

Finite Op Amp Gain and Bandwidth

- For an ideal op amp: $A = \infty$
- In reality, the gain is given by: $A(s) = \dfrac{A_0}{1 + \dfrac{s}{\omega_b}}$ ← Finite Gain; ← Finite Bandwidth
- For $\omega >> \omega_b$:

$$A(s) \approx \frac{A_0}{(s/\omega_b)} = \frac{A_0 \omega_b}{s} = \frac{\omega_T}{s}$$

→ Integrator w/ time const. $1/\omega_T$

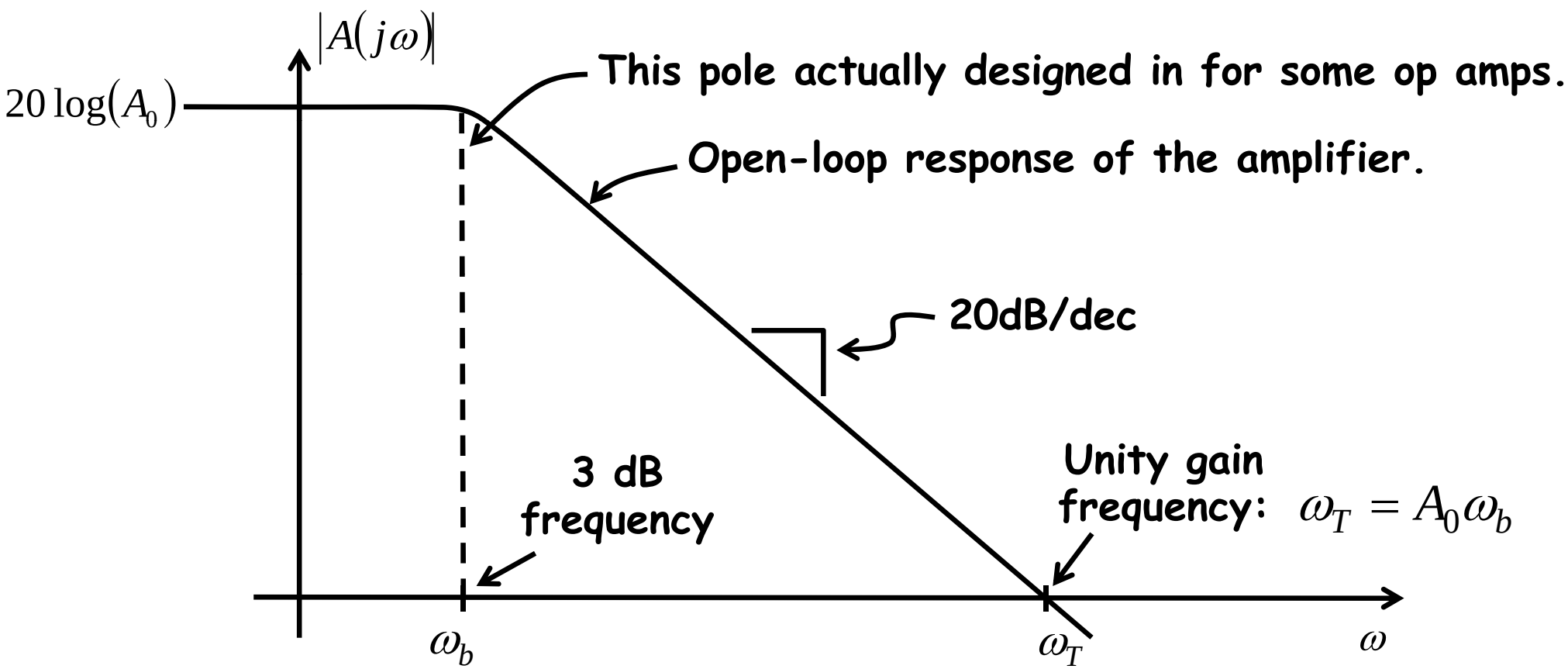

Finite Gain/BW of Op Amps (cont.)

Example:

Inverting Amplifier

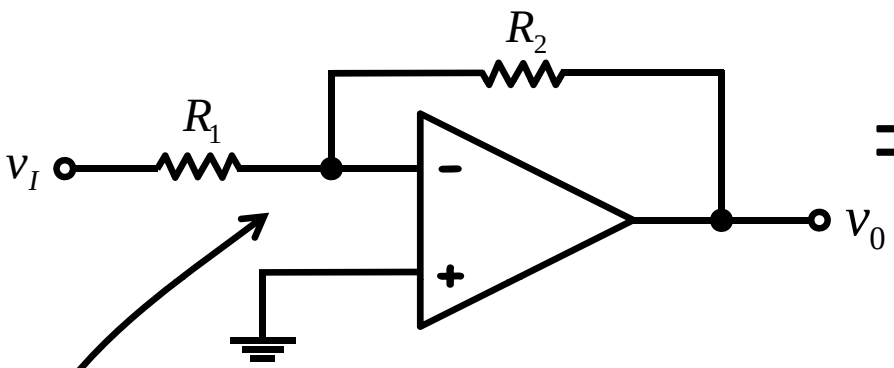

Negative FB Block Diagram

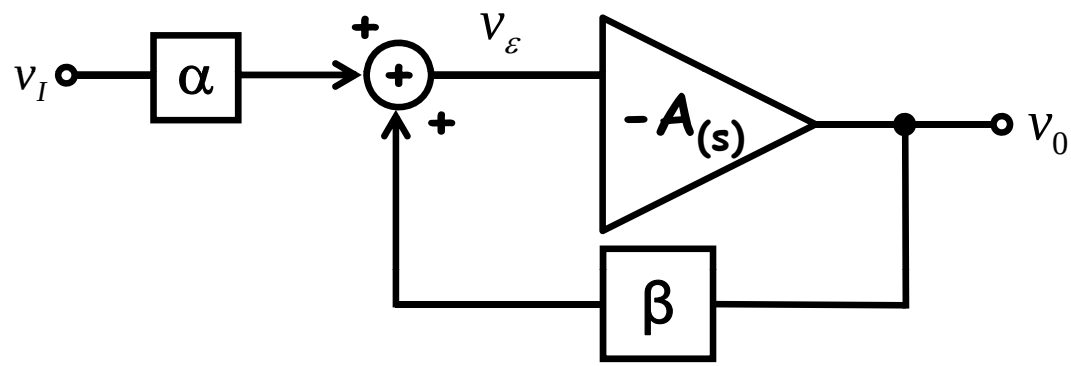

Signals from v_I and v_0 are summed at this node!

How much gets to this node is determined by the values of α and β.

Frequency response of Closed Loop Amplifiers

UC Berkeley

Example:

Non-Inverting Amplifier -

$$v_i = v_\varepsilon + v_\beta$$

$$\rightarrow v_\varepsilon = v_i - v_\beta$$

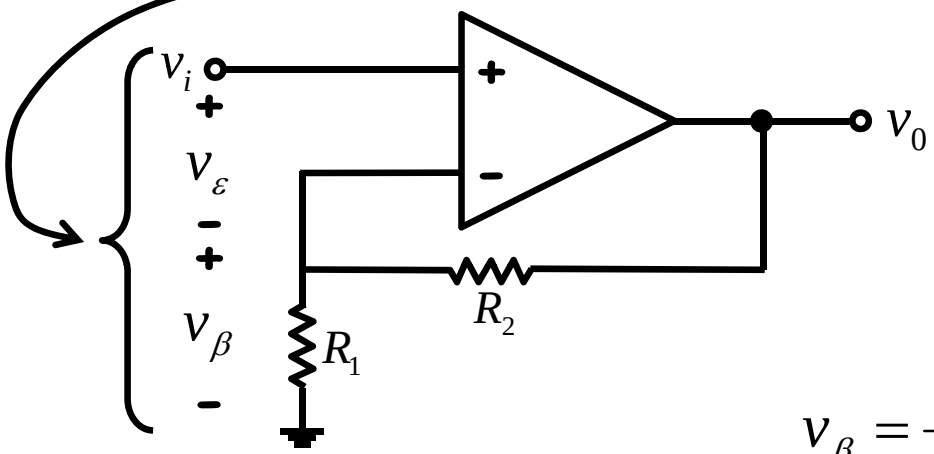

Negative FB Block Diagram -

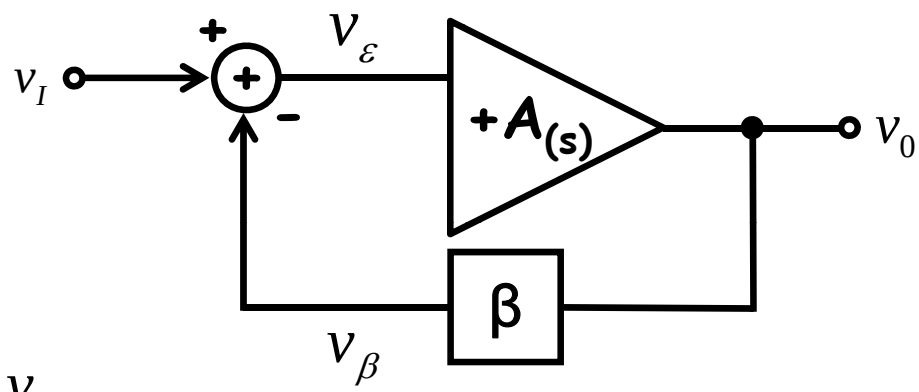

$$v_\beta = \frac{R_1}{R_1 + R_2} v_0$$

$$\boxed{\therefore \beta = \frac{v_\beta}{v_0} = \frac{R_1}{R_1 + R_2}}$$

Finite Gain BW of Op Amps

Brute Force $\frac{v_0}{v_I}(S)$ Derivation.

$$v_I = v_+$$

$$v_- = v_\pm - \frac{v_0}{A(S)}$$

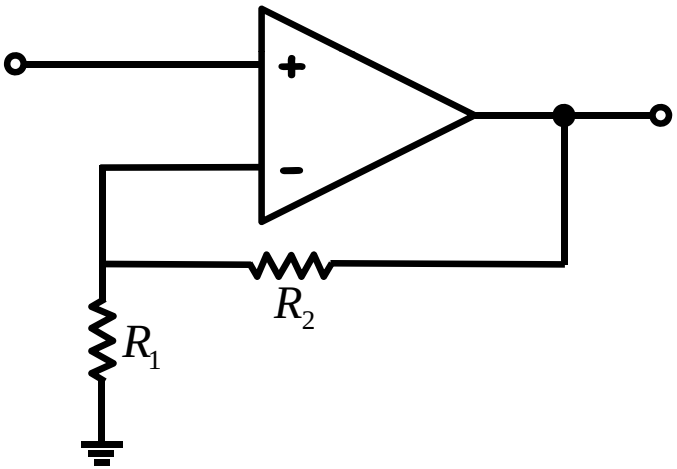

$$v_0 = A(S)(v_+ - v_-)$$

$$v_0 = A(S)v_+ - A(S)v_-$$

$$A(S)v_- = A(S)v_+ - v_0$$

$$v_- = v_I - \frac{v_0}{A(S)}$$

$$\frac{v_0 - v_-}{R_2} = \frac{v_-}{R_1} \rightarrow \frac{v_0}{R_2} = v_-\left(\frac{1}{R_1} + \frac{1}{R_2}\right)$$

$$= \left(v_I - \frac{v_0}{A(S)}\right)\left(\frac{1}{R_1} + \frac{1}{R_2}\right)$$

$$= v_I\left(\frac{1}{R_1} + \frac{1}{R_2}\right) - \frac{v_0}{A(S)}\left(\frac{1}{R_1} + \frac{1}{R_2}\right)$$

Finite Gain BW of Op Amps (cont.)

Brute Force $\frac{v_0}{v_I}(S)$ **Derivation (cont.).**

$$v_0\left(\frac{1}{R_2}+\frac{1}{A(S)}\left(\frac{1}{R_1}+\frac{1}{R_2}\right)\right)=v_I\left(\frac{1}{R_1}+\frac{1}{R_2}\right)$$

$$\frac{v_0}{v_I}=\frac{1+\frac{R_2}{R_1}}{1+\frac{1}{A(S)}\left(1+\frac{R_2}{R_1}\right)}$$

Finite Gain BW of Op Amps (cont.)

Brute Force $\frac{v_0}{v_I}(S)$ Derivation (cont.).

$$\left[A(S)=\frac{A_0}{1+\frac{S}{w_b}}\right]\Rightarrow\frac{v_0}{v_I}(S)=\frac{1+\frac{R_2}{R_1}}{1+\frac{1+\frac{S}{w_b}}{A_0}\left(1+\frac{R_2}{R_1}\right)}$$

$$=\frac{A_0\left(1+\frac{R_2}{R_1}\right)}{A_0+\left(1+\frac{S}{w_b}\right)\left(1+\frac{R_2}{R_1}\right)}$$

Finite Gain BW of Op Amps (cont.)

Brute Force $\frac{v_0}{v_I}(S)$ Derivation (cont.).

$$= \frac{1+\frac{R_2}{R_1}}{1+\left(1+\frac{S}{w_b}\right)\frac{1}{A_0}\left(1+\frac{R_2}{R_1}\right)} = \frac{1+\frac{R_2}{R_1}}{1+\frac{1}{A_0}\left(1+\frac{R_2}{R_1}\right)+\frac{S}{w_b}\frac{1}{A_0}\left(1+\frac{R_2}{R_1}\right)}$$

$$= \frac{1+\frac{R_2}{R_1}}{1+\frac{1}{A_0}\left(1+\frac{R_2}{R_1}\right)} \frac{1}{1+\frac{S}{w_b}\frac{\frac{1}{A_0}\left(1+\frac{R_2}{R_1}\right)}{1+\frac{1}{A_0}\left(1+\frac{R_2}{R_1}\right)}}$$

$$= \left(1+\frac{R_2}{R_1}\right)\frac{1}{1+\frac{S}{w_b A_0\left(\frac{R_1}{R_1+R_2}\right)}}$$

Finite Gain/BW of Op Amps

Recall from our previous feedback analysis:

$$\frac{v_0}{v_i}(S) = \frac{A(S)}{1+\beta A(S)}$$

$$\left[A(S) = \frac{A_0}{1+\frac{S}{w_b}} \right]$$

$$\frac{v_0}{v_I}(S) = \frac{\frac{A_0}{1+S/w_b}}{1+\beta\left(\frac{A_0}{1+S/w_b}\right)} = \frac{A_0}{1+\frac{S}{w_b}+A_0\beta}$$

$$= \overbrace{\frac{A_0}{1+A_0\beta}}^{\text{"closed-loop dc gain" term}} \overbrace{\frac{1}{1+\frac{S}{w_b(1+A_0\beta)}}}^{\text{Frequency-shaping term}} = \frac{v_0}{v_I}(S)$$

$$T(S) = \beta A(S) \underline{\underline{\Delta}} \text{"loop gain"} \longrightarrow T_0 = A_0\beta = \text{"loop gain" at } w = 0$$

(i.e., at dc)

Input Offset Voltage

Input Offset Voltage V_{OS}

Input Offset Voltage, V_{OS}:

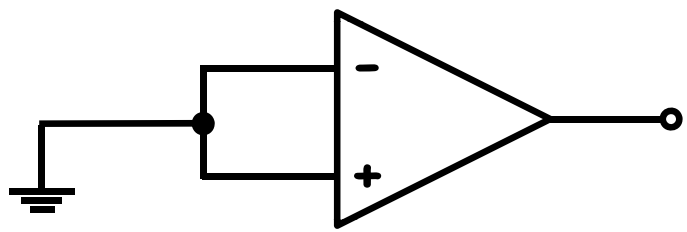

$$v_0 = A(v_+ - v_-)$$

Ideal case: $v_0 = 0$

Reality: $v_0 \neq 0$ (usually, $v_0 = L^+$ or L^- : it rails out!)

Why? Internal mismatches within the op amp → cause a dc offset. Model this with an equivalent input offset voltage V_{OS}.

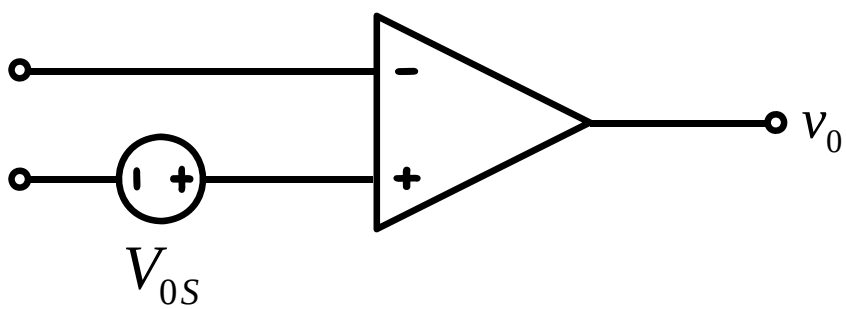

Typically, V_{OS} = 1mV – 5mV

Effect of V_{0S} on Op Amp Circuits

Example: Non-Inverting Amplifier

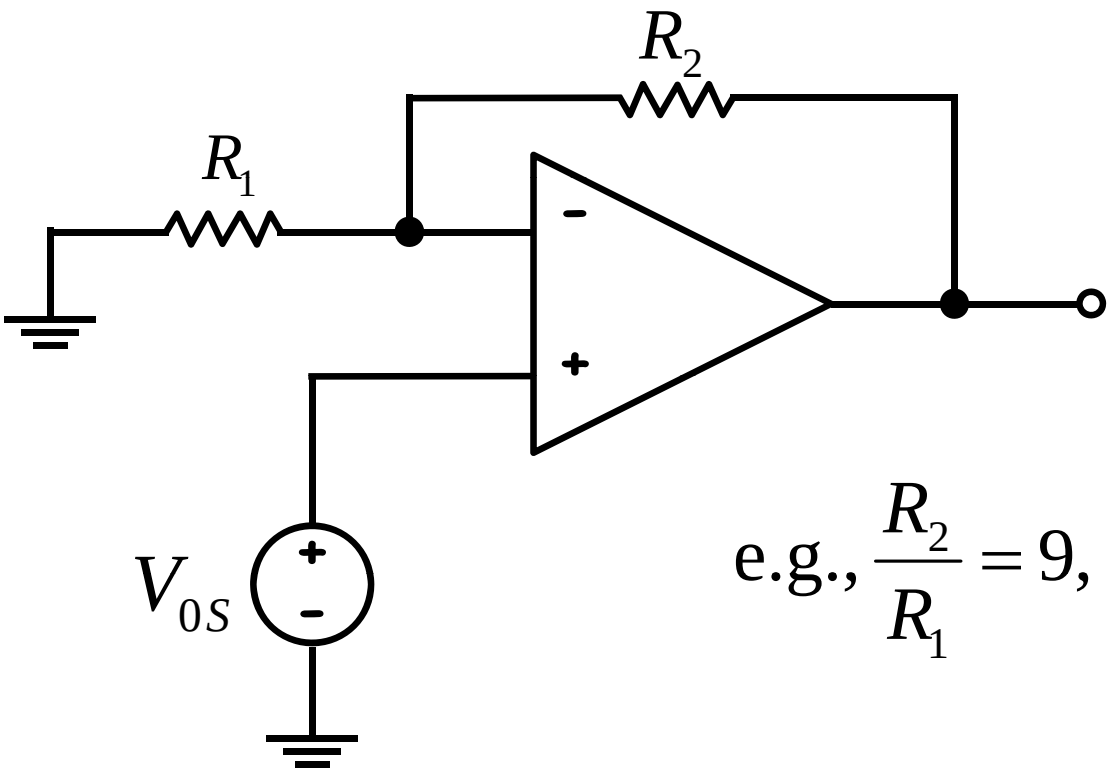

$$V_0 = V_{0S}\left(1 + \frac{R_2}{R_1}\right)$$

$$\text{e.g., } \frac{R_2}{R_1} = 9, \quad V_{0S} = 5mV \rightarrow V_0 = 50mV$$

(not so bad …)

Effect of V_{0S} on Op Amp Circuits (cont.)

Example: Integrator

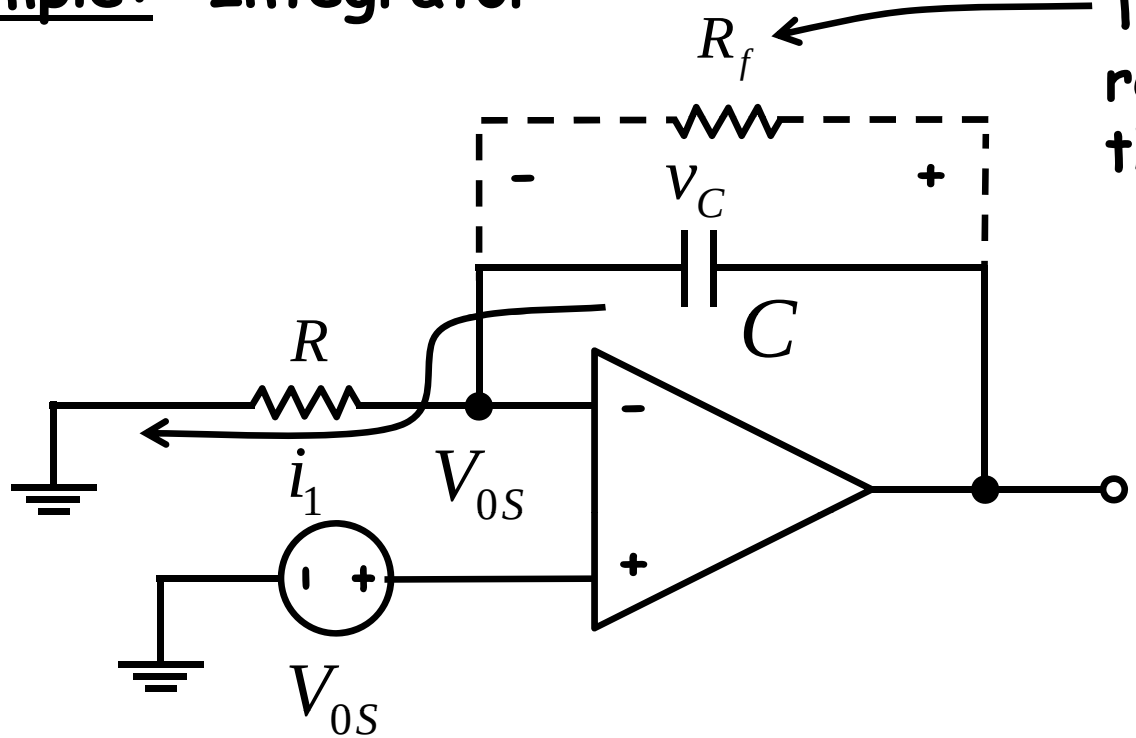

To fix this, place a resistor in shunt with the C → then:

$$v_0 = V_{0S}\left(1+\frac{R_f}{R}\right)$$

$$v_0 = V_{0S} + \frac{1}{C}\int_0^t i_1 dt$$

$$= V_{0S} + \frac{1}{C}\int_0^t \frac{V_{0S}}{R} dt$$

$$= V_{0S}\left(1+\frac{t}{RC}\right) + v_C\big|_{t=0}$$

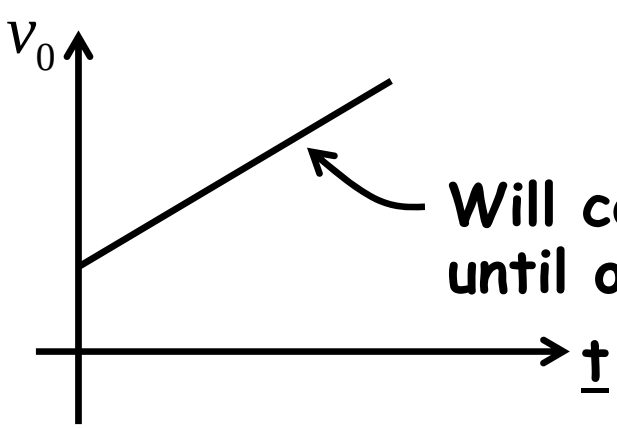

Will continue to increase until op amp saturates