Final Exam Solutions

Problem 1. **Total 40 points**

Please provide short written answers to the questions that follow.

(a) What is "footing" in deep reactive ion etching? Why does it occur?

"Footing" is an occurence in deep reactive ion etching (DRIE) where etching occurs laterally into the silicon once the etchants reach an oxide (or other dielectric) film underlying the silicon. It occurs because the underlying dielectric does not provide e⁻'s to negate the (+) charge of incoming ions, thereby allowing buildup of (+) charge on the dielectric surface. The (+) charge repels incoming ions, sending them towards the sidewalls, and hence, promoting etching in the horizontal direction.

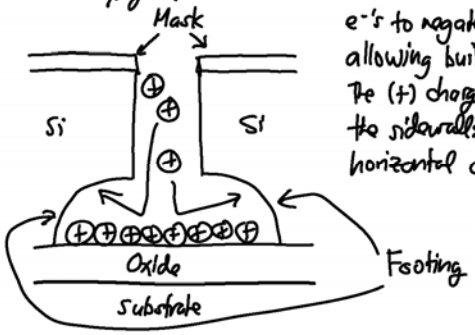

(b) Suppose you needed to integrate MEMS together with CMOS transistors in a single planar process. You have two choices on which to proceed: (i) one where steps from the MEMS process flow are intermixed with steps from the transistor process flow; and (ii) one where all of the transistors are fabricated first, in one module, and all the MEMS fabricated afterwards, in another module, where no intermixing of steps from the modules occurs. Which would you choose? Give two reasons why you made this choice.

Choose (ii), the modular one, because:

1. A modular process requires fewer passivation/protection steps than an intermixed one, which needs such steps everytime it switches from the transistor flow to the MEMS flow, and vice versa.
2. A modular process can adapt much more easily to changes in either module; whereas a mixed process must be redesigned from scratch to accomodate changes in the transistor and/or MEMS module.
3. A modular process can more easily incorporate foundry transistors (e.g., CMOS); whereas intermixed processes must generally be realized in custom fabs.

(Any two of these received points.)

(c) Suppose you wanted to integrate nickel micromechanical structures together with CMOS transistors in a single modular planar fabrication process. Would you do the nickel MEMS before the transistors or after them? Give two reasons why.

After the transistors, because:

1. Nickel will contaminate transistors if present during their fabrication, rendering them inoperable.
2. Nickel cannot withstand the high temperatures (>1000°C) often used in transistor fabrication.
3. Transistors can withstand the relatively low temperatures (<500°C) required for nickel MEMS fabrication.
4. Doing nickel after transistors allows the use of less expensive foundry transistors.

(Any two of these received points.)

(d) Give three reasons why electrostatic comb drive transducers are popular in MEMS designs.

1. They allow a large range of motion.
2. The force they generate is independent of displacement x.
3. They do not generate electrical stiffness, so allow resonance frequencies independent of DC-bias voltage.
4. They provide a linear capacitance variation with displacement.

(Any three of these received points.)

Problem 2. **Total 50 points**

The figure below presents the top view of a shuttle mass free to move in the x-direction, as governed by the indicated mechanical spring with stiffness k_m. The spring is otherwise infinitely stiff in the y- and z-directions. The shuttle can be driven into motion by the electrode shown, which is rigidly anchored to a substrate at the shaded region. Mechanical and electrical data for this problem is given in the box below the figure.

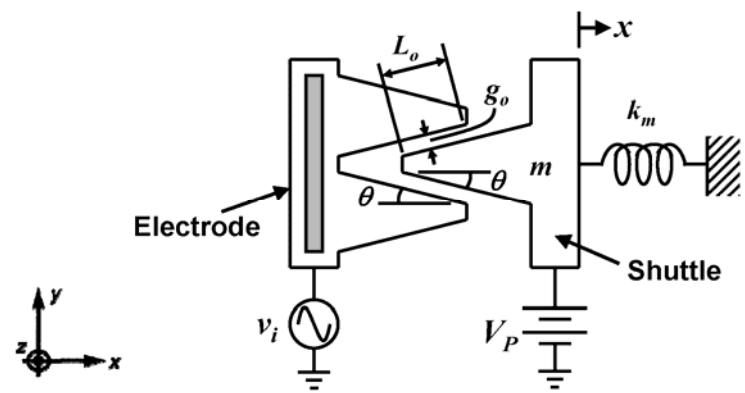

Mechanical Data:
Geometrical Dimensions: $L_o = 20$ µm; $g_o = 2$ µm; $\theta = 30^o$; Thickness, $h = 2$ µm
Spring Constant, $k_m = 1$ N/m; Shuttle Mass, $m = 4 \times 10^{-11}$ kg

Electrical Data:
DC-Bias Voltage, $V_P = 50$V
Permittivity of Vacuum: 8.854×10^{-12} F/m

Final Exam Solutions

Answer the following questions regarding the above spring-mass system.

(a) Write an expression for the shuttle-to-electrode finger overlap capacitance $C(x)$ as a function of displacement x. Calculate its value at x=0.

(b) Write an expression for the change in shuttle-to-electrode finger overlap capacitance per unit displacement, $\partial C/\partial x$. Calculate its value at x=0.

(c) Write an approximate expression for the electrical spring constant k_e generated between the shuttle and electrode. Calculate its value at V_P=50V.

(d) Determine the pull-in voltage V_{PI} of the shuttle (i.e., the voltage that causes the shuttle to collapse into the electrode).

(a)

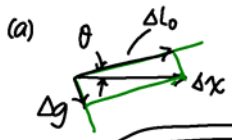

$\Delta L_0 = \Delta x \cos\theta$

$\Delta g = \Delta x \sin\theta$

When the shuttle moves by x:

C overlap length, $L_0 \rightarrow L_0 - 2\Delta L_0 = L_0 - 2x\cos\theta$

C gap, $g_0 \rightarrow g_0 + x\sin\theta$

Thus: $C(x) = \dfrac{2\epsilon_0 h(L_0 - 2x\cos\theta)}{g_0 + x\sin\theta}$

For $x=0$:

$C(x=0) = \dfrac{2(8.854\times10^{-12})(2\mu)(20\mu)}{(2\mu)} = 0.354\,fF$

(b) $\dfrac{\partial C}{\partial x} = 2\epsilon_0 h\left\{(L_0 - 2x\cos\theta)(-1)(g_0 + x\sin\theta)^{-2}(\sin\theta) + (-2\cos\theta)(g_0 + x\sin\theta)^{-1}\right\}$

$= 2\epsilon_0 h\left\{\dfrac{(L_0 - 2x\cos\theta)(-\sin\theta)}{(g_0 + x\sin\theta)^2} - \dfrac{2\cos\theta}{g_0 + x\sin\theta}\right\}$

$= 2\epsilon_0 h\left\{\dfrac{-L_0\sin\theta + \cancel{2x\cos\theta\sin\theta} - 2g_0\cos\theta - \cancel{2x\cos\theta\sin\theta}}{(g_0 + x\sin\theta)^2}\right\}$

$= -2\epsilon_0 h\dfrac{L_0\sin\theta + 2g_0\cos\theta}{(g_0 + x\sin\theta)^2} = -\dfrac{2\epsilon_0 h}{g_0}\dfrac{(L_0\sin\theta + 2g_0\cos\theta)}{\left(1 + \frac{\sin\theta}{g_0}x\right)^2}$

$= -\dfrac{2\epsilon_0 h(L_0\sin\theta + 2g_0\cos\theta)}{g_0^2}\left(1 + \dfrac{\sin\theta}{g_0}x\right)^{-2} \cong -\dfrac{C_{eff}}{g_0}\left(1 - \dfrac{2\sin\theta}{g_0}x\right) = \dfrac{\partial C}{\partial x}$

where $C_{eff} = \dfrac{2\epsilon_0 h(L_0\sin\theta + 2g_0\cos\theta)}{g_0}$

At $x=0$:

$C_{eff} = \dfrac{2(8.854\times10^{-12})(2\mu)[(20\mu)\sin30^\circ + 2(2\mu)\cos30^\circ]}{(2\mu)} = 0.238\,fF$

$\therefore \dfrac{\partial C}{\partial x}(x=0) = -\dfrac{0.238f}{2\mu} = -1.19\times10^{-10}\,F/m$

(c) $F_d = \frac{1}{2}(v_i - V_p)^2\dfrac{\partial C}{\partial x} = \frac{1}{2}(v_i^2 - 2V_p v_i + V_p^2)\left(-\dfrac{C_{eff}}{g_0}\right)\left(1 - \dfrac{2\sin\theta}{g_0}x\right)$ (A_1)

$= \frac{1}{2}\left(-\dfrac{C_{eff}}{g_0}\right)[v_i^2 - 2V_p v_i + V_p^2 - v_i^2 A_1 x + 2V_p v_i A_1 x - V_p^2 A_1 x]$

terms @ resonance

Taking only terms @ resonance:

$F_d|_{\omega_0} = V_p\dfrac{C_{eff}}{g_0}v_i + \frac{1}{2}\dfrac{C_{eff}}{g_0}V_p^2 A_1 x = V_p\dfrac{C_{eff}}{g_0}v_i + \cancel{\tfrac{1}{2}}\dfrac{C_{eff}}{g_0}V_p^2\dfrac{\cancel{2}\sin\theta}{g_0}x$

$k_e = V_p^2\dfrac{C_{eff}}{g_0^2}\sin\theta$

$\therefore k_e = V_p^2\dfrac{C_{eff}}{g_0^2}\sin\theta = V_p^2\dfrac{2\epsilon_0 h(L_0\sin\theta + 2g_0\cos\theta)}{g_0^3}\sin\theta$

At V_p=50V:

⇒ must first determine the gap spacing:

$g = g_0 - x\sin\theta = g_0 - \dfrac{F_d}{k_m}\sin\theta = g_0 - \frac{1}{2}\dfrac{V_p^2}{k_m}\left.\dfrac{\partial C}{\partial x}\right|_g\sin\theta = g_0 - \frac{1}{2}\dfrac{V_p^2}{k_m}\dfrac{2\epsilon_0 h(L\sin\theta + 2g\cos\theta)}{g^2}\sin\theta$

$L = L_0 - 2x\cos\theta$

$g = g_0 + x\sin\theta \rightarrow x = \dfrac{g - g_0}{\sin\theta}$

$L = L_0 - 2\left(\dfrac{g - g_0}{\sin\theta}\right)\cos\theta$

$L\sin\theta + 2g\cos\theta = L_0\sin\theta - 2(g - g_0)\cos\theta + 2g\cos\theta = L_0\sin\theta - \cancel{2g\cos\theta} + 2g_0\cos\theta + \cancel{2g\cos\theta}$

$= L_0\sin\theta + 2g_0\cos\theta$

$g = g_0 - \dfrac{1}{2}\dfrac{V_p^2}{k_m}\dfrac{2\epsilon_0 h(L_0\sin\theta + 2g_0\cos\theta)}{g^2}\sin\theta$

Iterate to solve.

① Plug in guessed g, here.

② Solve for this g.

Continue till convergence.

Iteration loop: $g_0 = 2\mu m \rightarrow g_1 = 1.92\mu m \rightarrow g_2 = 1.92\mu m$ (done)

Thus:

$k_e(@V_p = 50V) = (50)^2\dfrac{2(8.854\times10^{-12})(2\mu)[(20\mu)\sin30^\circ + 2(2\mu)\cos30^\circ]\sin30^\circ}{(1.92\mu)^3} = 0.083\,N/m$

(d) Pull-in occurs when frequency → 0, or when $k_e = k_m$.

$k_e = k_m = V_{PI}^2\dfrac{2\epsilon_0 h(L_0\sin\theta + 2g_{PI}\cos\theta)}{g_{PI}^3}\sin\theta \Rightarrow V_{PI} = \left[\dfrac{k_m g_{PI}^3}{2\epsilon_0 h(L_0\sin\theta + 2g_{PI}\cos\theta)\sin\theta}\right]^{1/2}$

Find the pull-in gap, g_{PI}:

$F_e = \frac{1}{2}V_p^2\dfrac{\partial C}{\partial x} = \frac{1}{2}V_p^2\dfrac{2\epsilon_0 h(L_0\sin\theta + 2g_{PI}\cos\theta)}{g_{PI}^2}$

$F_{net} = 0 = F_e - k(g_0 - g_{PI})$

$0 = \frac{1}{2}\cancel{V_{PI}^2}\dfrac{\cancel{2\epsilon_0 h(L_0\sin\theta + 2g_{PI}\cos\theta)}}{\cancel{g_{PI}^2}} - \cancel{V_{PI}^2}\dfrac{\cancel{2\epsilon_0 h(L_0\sin\theta + 2g_{PI}\cos\theta)}\sin\theta}{g_{PI}^3}(g_0 - g_{PI})$

Final Exam Solutions

$$0 = \frac{1}{2} - \frac{\sin\theta}{g_{PI}}(g_o - g_{PI}) \Rightarrow g_{PI} = \frac{2\sin\theta}{1+2\sin\theta} g_o$$

Plug in number:

$$g_{PI} = \frac{2\sin 30^\circ}{1+2\sin 30^\circ}(2\mu) = 1\mu m$$

$$\therefore V_{PI} = \left[(50)^2 \frac{2(8.854\times10^{-12})(2\mu)[(20\mu)\sin 30^\circ + 2(2\mu)\cos 30^\circ]\sin 30^\circ}{(1\mu)^3}\right]^{1/2} = 69.4V$$

Problem 3. **Total 61 points**

The figure below presents a micromechanical device with numerous ports, together with an output sensing circuit. Here, all lightly shaded regions are suspended 2 μm above a substrate; while all darkly shaded regions are firmly anchored to the substrate. Assume that all structures are rigid, except for the thin beams in the folded beam suspensions. Ignore levitation in this problem.

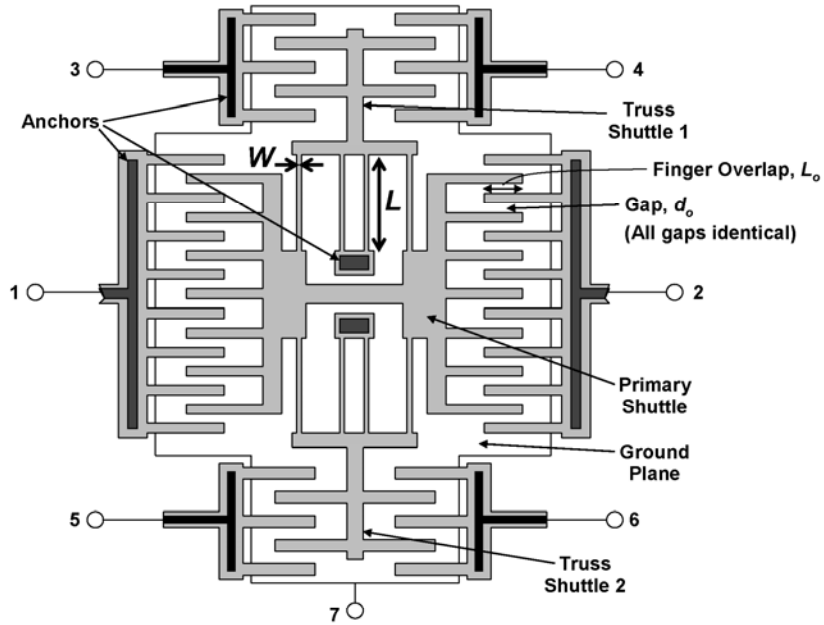

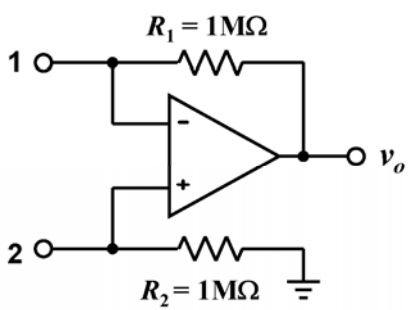

Structural Material Properties:
Young's Modulus, $E = 150$ GPa
Density, $\rho = 2{,}300$ kg/m^3
Poisson ratio, $\nu = 0.226$
$Q = 100{,}000$

Geometric Dimensions:
$L = 40\mu m$; $W = 2\mu m$; $L_o = 20$ μm
Thickness, $h = 2\mu m$
All Finger Gaps, $d_o = 1$ μm
Truss Shuttle 1 Area = 500 μm^2
Truss Shuttle 2 Area = 500 μm^2
Shuttle Area = 4,000 μm^2

Use the data in the box above to answer the following questions.

(a) Calculate the resonance frequency of this structure (i) when $V_P = 0$V; and (ii) when $V_P = 50$V.

(b) Assume that terminal 7 is tied to a dc-bias $V_P = 50$V and all other terminals except 1 and 2 are grounded. Draw the electrical equivalent circuit for the ensuing micromechanical device (ignoring grounded ports) and provide numerical element values for the equivalent circuit.

(c) If terminal 7 is tied to a dc-bias $V_P = 50$V, terminal 1 is driven by an ac voltage at the resonance frequency with magnitude 30 mV, and all other terminals are grounded, what is the magnitude of motional current coming out of terminal 4 (into ground)?

(d) If terminals 1 and 2 of the micromechanical device are tied to terminals 1 and 2 of the sensing circuit, terminal 7 is tied to a dc-bias $V_P = 50$V, and all other terminals are grounded, what rms output noise voltage density (in V/√Hz) ensues at a frequency equal to half the resonance frequency? For this part, assume that the op amp is ideal in all respects, except that it exhibits noise modeled by the following uncorrelated input-referred noise sources:

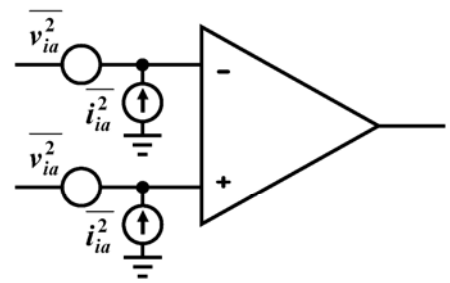

where

$$\sqrt{\frac{\overline{v_{ia}^2}}{\Delta f}} = 12 \text{ nV}/\sqrt{\text{Hz}} \qquad \sqrt{\frac{\overline{i_{ia}^2}}{\Delta f}} = 0.01 \text{ pA}/\sqrt{\text{Hz}}$$

(a) This device is just a folded-beam comb-driven resonator w added mass on its folding trusses. Thus, from lecture:

$$\omega_o = \left[\frac{k_x}{M_{eq}}\right]^{1/2} \qquad k_x = 2Eh\left(\frac{W}{L}\right)^3 = 2(150G)(2\mu)\left(\frac{2\mu}{40\mu}\right)^3 = 75 \text{ N/m}$$

$$M_{eq} = M_s + \frac{1}{4}M_t + \frac{12}{35}M_b$$

$$= (2300)(2\mu)\left\{4000 + \frac{1}{4}(2)(500) + \frac{12}{35}(8)(2\mu)(40\mu)\right. = 2.06\times10^{-11} \text{ kg}$$

$$\therefore \omega_o = \left[\frac{75}{2.06\times10^{-11}}\right]^{1/2} = 1.91\times10^6 \text{ rad/s} \Rightarrow f_o = \frac{\omega_o}{2\pi} = 303.98 \text{ kHz}$$ for (i) & (ii)

Since comb-driven devices do not have electrical stiffness (in the lateral direction)

Final Exam Solutions

(b) With only ports 1 and 2 active, the equivalent ckt reduces to that of a two-port mechanical device:

$C_x = \frac{1}{k_x} = 0.0133\ F$

$l_x = M_{eq} = 2.056\times10^{-11}\ H$

$r_x = \frac{\omega_0 M_{eq}}{Q} = 3.93\times10^{-10}\ \Omega$

$$C_{01} = \frac{2N_{f1}\epsilon_0 h L_0}{d_0} = \frac{2(7)(8.854\times10^{-12})(2\mu)(20\mu)}{(1\mu)} = 4.96\ fF = C_{01} = C_{02}$$

$$\eta_{e1} = V_{P1}\frac{\partial C_1}{\partial x} = V_{P1}\frac{2N_{f1}\epsilon_0 h}{d_0} = (50)\frac{2(7)(8.854\times10^{-12})(2\mu)}{(1\mu)} = 1.24\times10^{-8}\ C/m = \eta_{e1} = \eta_{e2}$$

(c) The displacement X_s at the primary shuttle induced by the excitation N_i is:

$$F_d = V_{P1}\frac{\partial C_1}{\partial x}N_i \qquad X_s = \frac{QF_d}{k_x}$$

$$X_s = \frac{Q}{k_x}\eta_{e1}N_i = \frac{(100K)}{75}(1.24\times10^{-8})(30m) = 0.496\mu m$$

Folding truss shuttle displacement: $X_t = \frac{1}{2}X_s$

$$i_{04} = V_{P4}\frac{\partial C_4}{\partial x}\frac{\partial x}{\partial t} = j\omega_0 X_t V_{P4}\frac{\partial C_4}{\partial x} = j\omega_0\left(\frac{X_s}{2}\right)\eta_{e4} = j(1.91\times10^6)$$

$$\eta_{e4} = V_{P4}\frac{\partial C_4}{\partial x} = V_{P4}\frac{2N_{f4}\epsilon_0 h}{d_0} = (50)\frac{2(2)(8.854\times10^{-12})(2\mu)}{(1\mu)} = 3.54\times10^{-9}\ C/m$$

$$i_{04} = j(1.91\times10^6)\left(\frac{0.496\mu}{2}\right)(3.54\times10^{-9}) = 1.68\ nA$$

(d) The noise ckt is as follows:

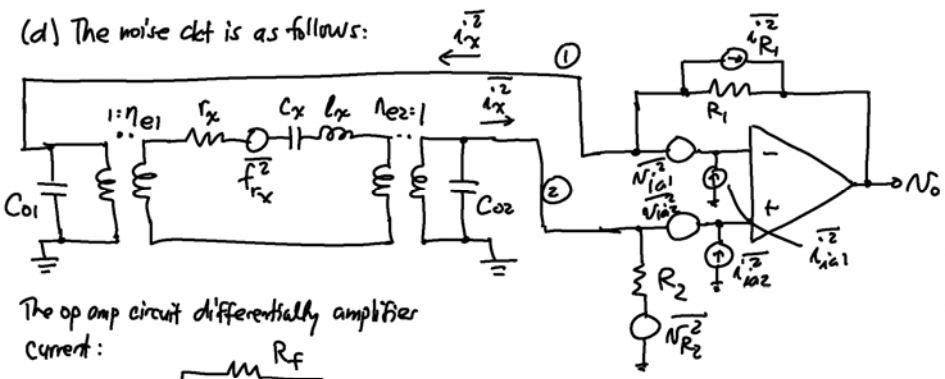

The op amp circuit differentially amplifies current:

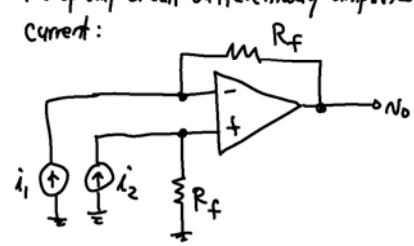

By superposition:

$$\left.\begin{array}{l} \underline{i_1}:\ v_o = -R_f i_1 \\ \underline{i_2}:\ v_o = R_f i_2 \end{array}\right\} v_o|_{tot} = -R_f(i_1 - i_2)$$

Now, do the noise analysis: (one source at a time)

$\overline{i_x^2}$: $v_o = -R_1(2i_x) \rightarrow \overline{v_o^2} = 4R_1^2\overline{i_x^2} = 4R_1^2\frac{4kT}{R_x}\left|\Theta\left(\frac{j\omega_0}{2}\right)\right|^2\Delta f$

$= 16kT\frac{R_1^2}{R_x}\left|\Theta\left(\frac{j\omega_0}{2}\right)\right|^2\Delta f$

$\overline{v_{ia1}^2}$: $v_o = v_{ia1} \rightarrow \overline{v_o^2} = \overline{v_{ia1}^2} = \overline{v_{ia}^2}$

$\overline{v_{ia2}^2}$: $v_o = v_{ia2} \rightarrow \overline{v_o^2} = \overline{v_{ia2}^2} = \overline{v_{ia}^2}$

$\overline{i_{ia1}^2}$: $v_o = -R_1 i_{ia1} \rightarrow \overline{v_o^2} = R_1^2\overline{i_{ia1}^2} = R_1^2\overline{i_{ia}^2}$

$\overline{i_{ia2}^2}$: $v_o = -R_1 i_{ia2} \rightarrow \overline{v_o^2} = R_1^2\overline{i_{ia2}^2} = R_1^2\overline{i_{ia}^2}$

$\overline{i_{R_1}^2}$: $v_o = i_{R_1}R_1 \rightarrow \overline{v_o^2} = R_1^2\overline{i_{R_1}^2} = R_1^2\frac{4kT}{R_1}\Delta f = 4kTR_1\Delta f$

$\overline{v_{R_2}^2}$: $v_o = v_{R_1} \rightarrow \overline{v_o^2} = 4kTR_1\Delta f$

Thus:

$$\frac{\overline{v_o^2}}{\Delta f} = 16kT\frac{R_1^2}{R_x}\left|\Theta\left(\frac{j\omega_0}{2}\right)\right|^2 + 2\frac{\overline{v_{ia}^2}}{\Delta f} + 2R_1^2\frac{\overline{i_{ia}^2}}{\Delta f} + 8kTR_1$$

$$= 2\left\{\frac{\overline{v_{ia}^2}}{\Delta f} + R_1^2\frac{\overline{i_{ia}^2}}{\Delta f} + 4kT\left(2\frac{R_1^2}{R_x}\left|\Theta\left(\frac{j\omega_0}{2}\right)\right|^2 + R_1\right)\right\}$$

$$\therefore\ \frac{\overline{v_o^2}}{\Delta f} = 2\left\{\frac{\overline{v_{ia}^2}}{\Delta f} + R_1^2\frac{\overline{i_{ia}^2}}{\Delta f} + 4kTR_1\left(1 + 2\frac{R_1}{R_x}\left|\Theta\left(\frac{j\omega_0}{2}\right)\right|^2\right)\right\}$$

Plugging in numbers:

$$\frac{\overline{v_o^2}}{\Delta f} = 2\left\{\underbrace{(12n)^2}_{1.44\times10^{-16}} + \underbrace{(1M)^2(0.01p)^2}_{1\times10^{-16}} + \underbrace{(1.66\times10^{-20})(1M)}_{1.66\times10^{-14}\ \text{dominant}}\underbrace{\left(1 + 2\frac{1M}{2.56M}(6.67\times10^{-6})\right)}_{2.60\times10^{-6}\ \text{neglect}}\right\}$$

$$\Rightarrow \frac{\overline{v_o^2}}{\Delta f} = 3.37\times10^{-14}\ V^2/Hz$$

$$\sqrt{\frac{\overline{v_o^2}}{\Delta f}} = 0.184\mu V\ rms$$

$$R_x = \frac{r_x}{\eta_{e1}^2} = \frac{3.93\times10^{-10}}{(1.24\times10^{-8})^2} = 2.56\ M\Omega$$

$$\Theta\left(\frac{j\omega_0}{2}\right) = \frac{(\omega_0/Q)\left(\frac{j\omega_0}{2}\right)}{-\left(\frac{\omega_0}{2}\right)^2 + (\omega_0/Q)\left(\frac{j\omega_0}{2}\right) + \omega_0^2} = \frac{j\omega_0^2}{2Q}\,\frac{1}{\frac{3\omega_0^2}{4} + \frac{j\omega_0^2}{2Q}} = \frac{j}{\frac{3}{2}Q + j}$$

$$\left|\Theta\left(\frac{j\omega_0}{2}\right)\right|^2 = \frac{1}{\left(\frac{3}{2}Q\right)^2 + 1} = \frac{1}{1 + \left[\frac{3}{2}(100K)\right]^2} = 6.67\times10^{-6}$$