Notes on the Class Project

- ENOB=6bit for the case:
  - Input test signal a 10MHz full-scale sinusoidal signal
  - No non-idealities such as comparator offset added
  - Note that:
    - Transient analysis in Spectre or HSpice does not include device noise
    - Device models do not address charge injection for switches

    → **Results obtained from transient analysis + FFT will indicate performance better than measured data from actual silicon**

EE247
Lecture 24

Oversampled ADCs (continued)

- 2nd order ΣΔ modulator
  - Practical implementation
    - Effect of various building block nonidealities on the ΣΔ performance
      - Integrator maximum signal handling capability
      - Integrator finite DC gain
      - Comparator hysteresis (minimum signal handling capability)
      - Integrator non-linearity
      - Effect of KT/C noise
      - Finite opamp bandwidth
      - Opamp slew limited settling
    - Implementation example
- Higher order ΣΔ modulators
  - Cascaded modulators (multi-stage)
  - Single-loop single-quantizer modulators with multi-order filtering in the forward path

ΣΔ Implementation
Practical Design Considerations

- Internal node scaling & clipping
- Effect of finite opamp gain & linearity
- KT/C noise
- Opamp noise
- Finite opamp bandwidth
- Opamp slew limited settling
- Effect of comparator nonidealities
- Power dissipation considerations

Switched-Capacitor Implementation 2nd Order ΣΔ Nodes Scaled for Maximum Dynamic Range

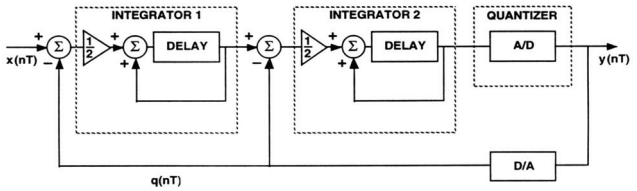

- Modification (gain of ½ in front of integrators) reduce & optimize required signal range at the integrator outputs ~ 1.7x input full-scale (Δ)
- Note: Non-idealities associated with 2nd integrator and quantizer when referred to the ΣΔ input is attenuated by 1st integrator high gain
  - → The only building block requiring low-noise and high accuracy is the 1st integrator

Ref: B.E. Boser and B.A. Wooley, "The Design of Sigma-Delta Modulation A/D Converters," IEEE J. Solid-State Circuits, vol. 23, no. 6, pp. 1298-1308, Dec. 1988.

2nd Order ΣΔ Modulator
Example: Switched-Capacitor Implementation

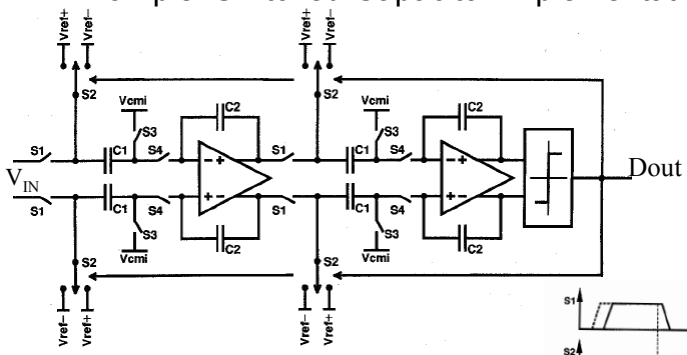

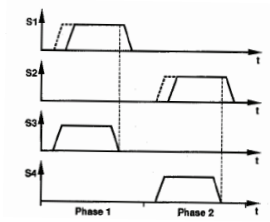

- Fully differential front-end
- Two bottom-plate integrators
- 1-bit DAC is made of switches and Vrefs

2nd Order ΣΔ Modulator
Switched-Capacitor Implementation

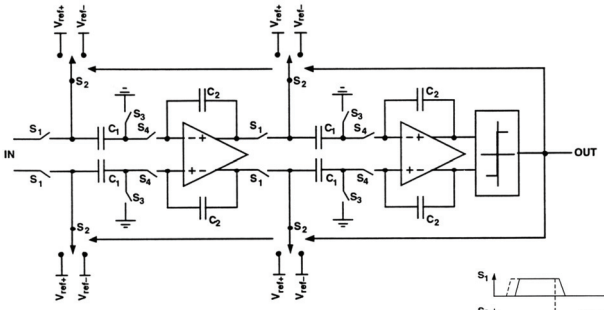

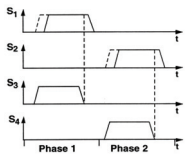

- The ½ loss in front of each integrator implemented by choice of:

$C_2=2C_1$ $\rightarrow f_0^{intg}=f_s/(4\pi)$

Design Phase Simulations

- Design of oversampled ADCs requires simulation of extremely long data traces due to the oversampled nature of the system
- SPICE type simulators:
  - Normally used to test for gross circuit errors only
  - Too slow for detailed performance verification
- Typically, behavioral modeling is used in MATLAB-like environments
- Circuit non-idealities either computed or found by using SPICE at subcircuit level
- Non-idealities introduced in the behavioral model one-by-one first to fully understand the effect of each individually
- Next step is to add as many of the non-idealities simultaneously as possible to verify whether there are interaction among non-idealities

Testing of AFE

- Typically in the design phase, provisions are made to test the AFE separate from Decimator
- Output of the AFE (0,1) is acquired by a data acquisition board or logic analyzer
- Matlab-like program is used to analyze data e.g. perform filtering & measure SNR, SNDR…..
- During pre-silicon design phase, output of AFE is filtered in software & Matlab used to measure SNR, SNDR

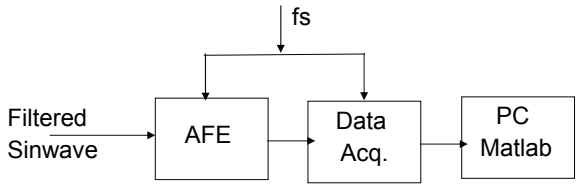

Example: Testing ΣΔ ADC

Note:
The Nyquist ADC tests such as INL and DNL test do not apply to ΣΔ modulator type ADCS

ΣΔ testing is performed via SNDR as a function of input signal level

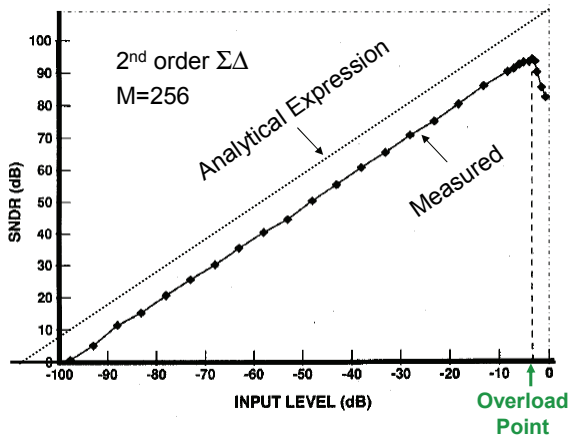

2nd Order ΣΔ

Effect of 1st Integrator Maximum Signal Handling Capability on SNR

- Behavioral model
- Non-idealities tested one by one

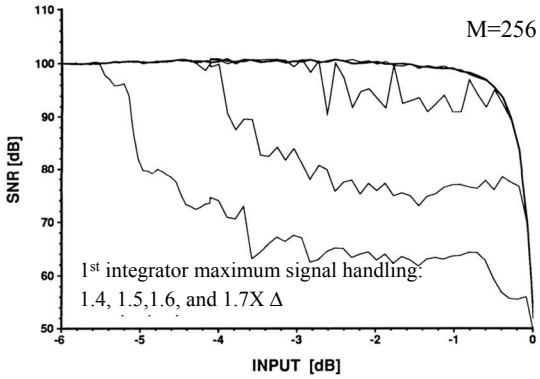

- Effect of 1st Integrator maximum signal handling capability on converter SNR
  → No SNR loss for max. sig. handling >1.7Δ

Ref: B.E. Boser et. al, "The Design of Sigma-Delta Modulation A/D Converters," JSSC, Dec. 1988.

2nd Order ΣΔ

Effect of 2nd Integrator Maximum Signal Handling Capability on SNR

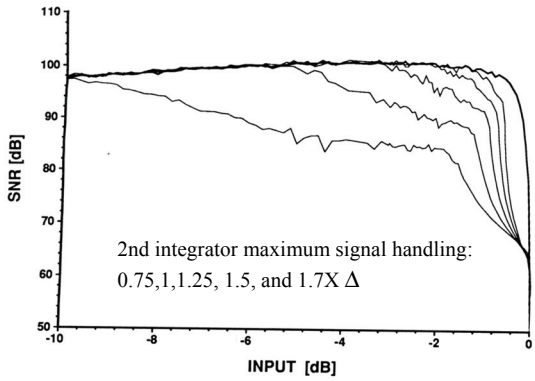

- Effect of 2nd Integrator maximum signal handling capability on SNR
  → No SNR loss for max. sig. handling >1.7 Δ

Ref: B.E. Boser et. al, "The Design of Sigma-Delta Modulation A/D Converters," JSSC, Dec. 1988.

2nd Order ΣΔ

Effect of Integrator Finite DC Gain

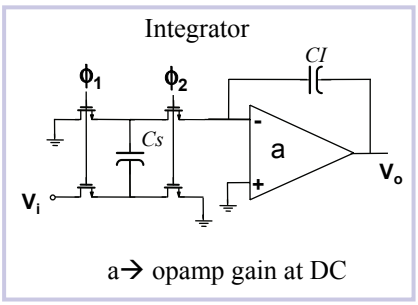

a→ opamp gain at DC

$$H(z)_{ideal} = \frac{Cs}{CI} \times \frac{z^{-1}}{1 - z^{-1}}$$

$$H(z)_{Finit\,DC\,Gain} = \frac{Cs}{CI} \times \frac{\left(\dfrac{a}{1 + a + \dfrac{Cs}{CI}}\right) z^{-1}}{1 - \left(\dfrac{1 + a}{1 + a + \dfrac{Cs}{CI}}\right) z^{-1}}$$

$$\rightarrow H(DC) = a$$

1nd Order ΣΔ
Effect of Integrator Finite DC Gain Analysis

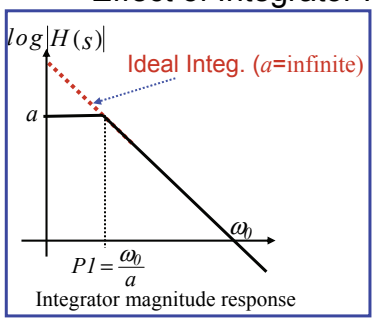

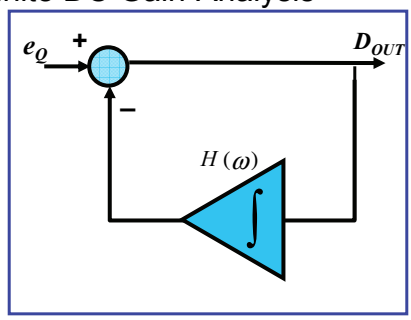

- Note: Quantization transfer function wrt output has integrator in the feedback path:

$$\frac{Dout}{e_Q} = \frac{1}{1+H(\omega)}$$

$$\rightarrow @\ DC\ for\ ideal\ integ:\ \frac{Dout}{e_Q} = 0$$

$$\rightarrow @\ DC\ for\ real\ integ:\ \frac{Dout}{e_Q} \approx \frac{1}{a}$$

1st & 2nd Order ΣΔ
Effect of Integrator Finite DC Gain

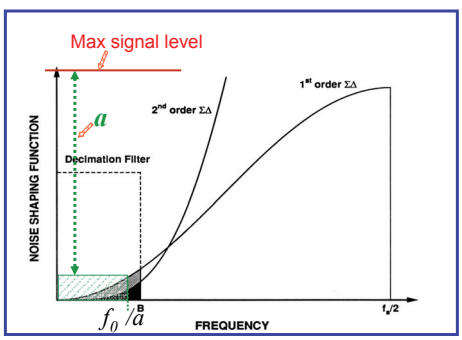

- Low integrator DC gain → Increase in total in-band quantization noise
- Can be shown: If $a > M$ (oversampling ratio) → Insignificant degradation in SNR
- Normally DC gain designed to be >> M in order to suppress nonlinearities

2nd Order ΣΔ
Effect of Integrator Finite DC Gain

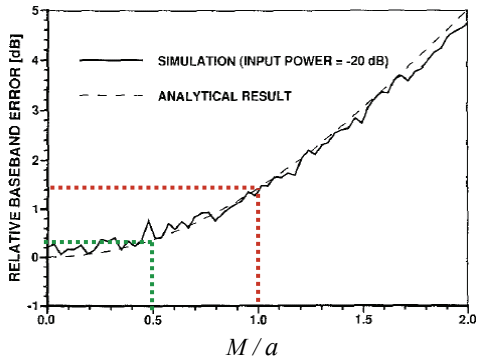

- *Example:* $a = 2M$ → 0.4dB degradation in SNR
  $a = M$ → 1.4dB degradation in SNR

Ref: B.E. Boser et. al, "The Design of Sigma-Delta Modulation A/D Converters," JSSC, Dec. 1988.

2nd Order ΣΔ
Effect of Comparator Non-Idealities on ΣΔ Performance

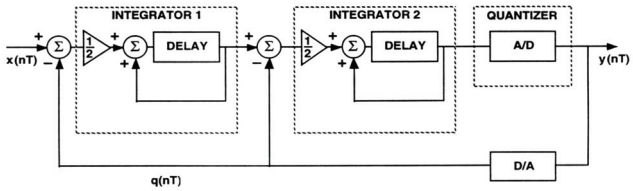

1-bit A/D → Single comparator

- Speed must be adequate for the operating sampling rate
- Input referred offset- feedback loop & high DC intg. gain suppresses the effect
  → ΣΔ performance quite insensitive to comparator offset
- Input referred comparator noise- same as offset
- Hysteresis= Minimum overdrive required to change the output

2nd Order ΣΔ Comparator Hysteresis

Hysteresis= Minimum overdrive required to change the output

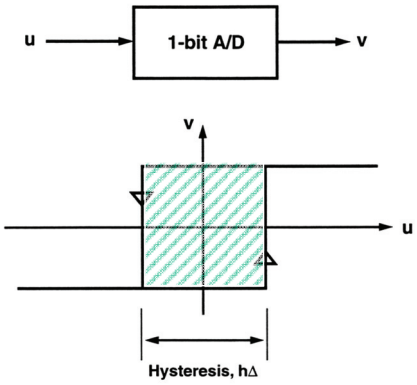

2nd Order ΣΔ Comparator Hysteresis

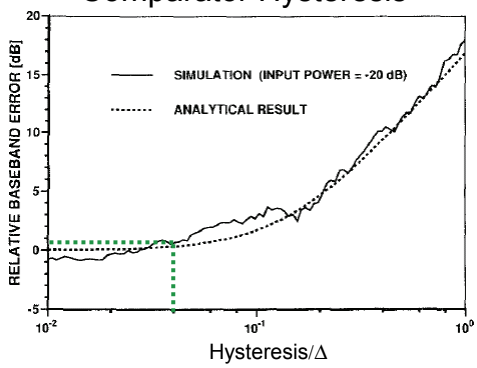

→ Comparator hysteresis < Δ/25 does not affect SNR

→ E.g. Δ=1V, comparator hysteresis up to 40mV tolerable

Key Point: One of the main advantages of ΣΔ ADCS → Highly tolerant of comparator and in general building-block non-idealities

2nd Order ΣΔ
Effect of Integrator Nonlinearities

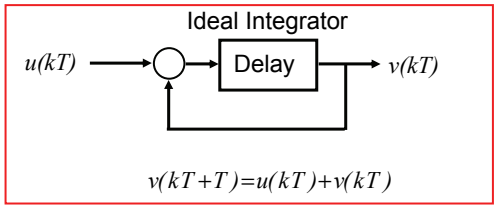

With non-linearity added:

$$v(kT+T) = u(kT) + \alpha_2 [u(kT)]^2 + \alpha_3 [u(kT)]^3 \ldots\ldots$$
$$+ v(kT) + \beta_2 [v(kT)]^2 + \beta_3 [v(kT)]^3 + \ldots.$$

Ref: B.E. Boser et. al, "The Design of Sigma-Delta Modulation A/D Converters," JSSC, Dec. 1988.

2nd Order ΣΔ
Effect of Integrator Nonlinearities (Single-Ended)

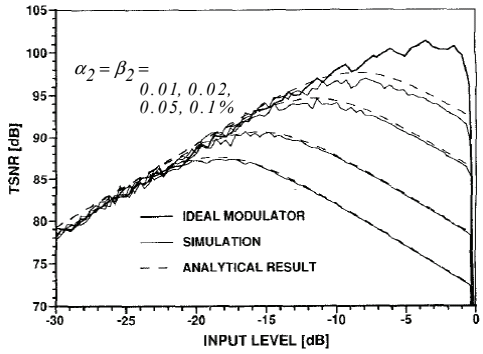

- Simulation for single-ended topology
- Effect of even order nonlinearities can be significantly suppressed by using differential circuit topologies

Ref: B.E. Boser et. al, "The Design of Sigma-Delta Modulation A/D Converters," JSSC, Dec. 1988.

2nd Order ΣΔ
Effect of Integrator Nonlinearities

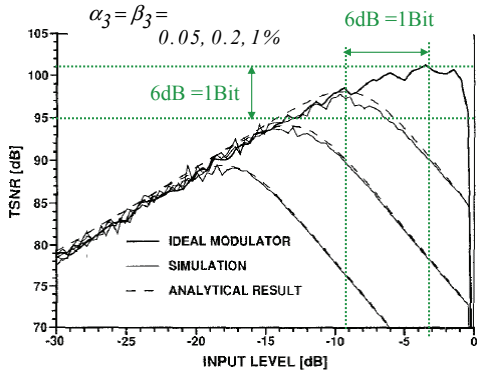

- Simulation for single-ended topology
- Odd order nonlinearities (3rd in this case)

Ref: B.E. Boser et. al, "The Design of Sigma-Delta Modulation A/D Converters," JSSC, Dec. 1988.

2nd Order ΣΔ
Effect of Integrator Nonlinearities

- Odd order nonlinearities (usually 3rd) could cause significant loss of SNDR for high resolution oversampled ADCs
- Two significant source of non-linearities:
  - Non-linearities associated with opamp used to build integrators
    - Opamp open-loop non-linearities are suppressed by the loopgain since there is feedback around the opamp
      - Class A opamps tend to have lower open-loop gain but more linear output versus input transfer characteristic
      - Class A/B opamps typically have higher open-loop gain but non-linear transfer function. At times this type is preferred for ΣΔ AFE due to its superior slew rate compared to class A type
    - Integrator capacitor non-linearites
      - Poly-Sio2-Poly capacitors→ C non-linearity in the order of 10ppm/V
      - Metal-Sio2-Metal capacitors ~ 1ppm/V

2nd Order ΣΔ
Effect of Integrator KT/C noise

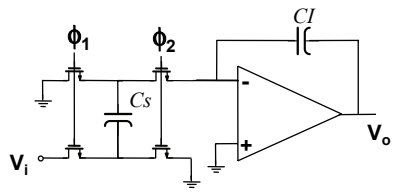

$$\overline{v_n^2} = \frac{2KT}{Cs}$$

$$\overline{v_n^2}/f = 2\frac{kT}{Cs} \times \frac{1}{fs/2} = 4\frac{kT}{Cs \times fs}$$

Total in-band noise:

$$\overline{v_n^2}_{input-referred} = 4\frac{kT}{Cs \times fs} \times f_B$$

$$= \frac{2kT}{Cs \times M}$$

- For the example of digital audio with *16-bit (96dB)* & *M=256* (*110dB SQNR*)
  - → *Cs=1pF* → *7μVrms* noise
  - → If $V_{FS}=2V_{p\text{-}p\text{-}d}$ then thermal noise @ *-101dB* → degrades overall *SNR* by *~10dB*
  - → *Cs=1pF, CI=2pF* → **much smaller capacitor area (~*1/M*) compared to Nyquist ADC**
  - → Since thermal noise provides some level of dithering → better not choose much larger capacitors!

2nd Order ΣΔ
Effect of Finite Opamp Bandwidth

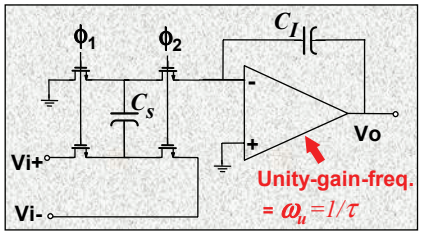

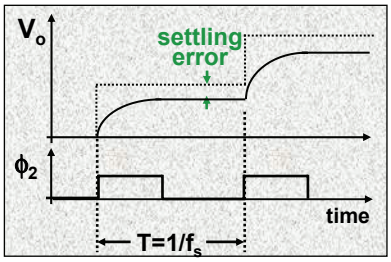

Assumptions:

Opamp → does not slew

Opamp has only one pole → exponential settling

2nd Order ΣΔ
Effect of Finite Opamp Bandwidth

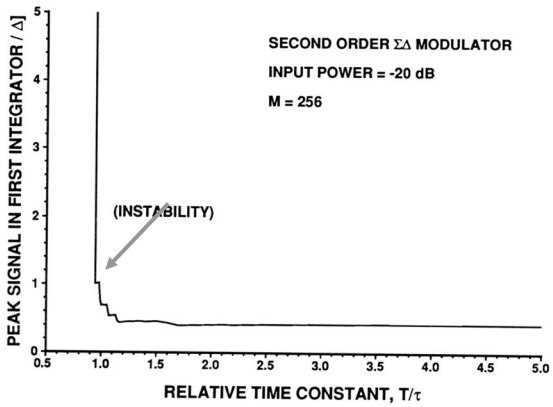

→ ΣΔ does not require high opamp bandwidth $T/\tau > 2$ or $f_u > 2f_s$ adequate

Note: Bandwidth requirements significantly more relaxed compared to Nyquist rate ADCs

Ref: B.E. Boser et. al, "The Design of Sigma-Delta Modulation A/D Converters," JSSC, Dec. 1988.

2nd Order ΣΔ
Effect of Slew Limited Settling

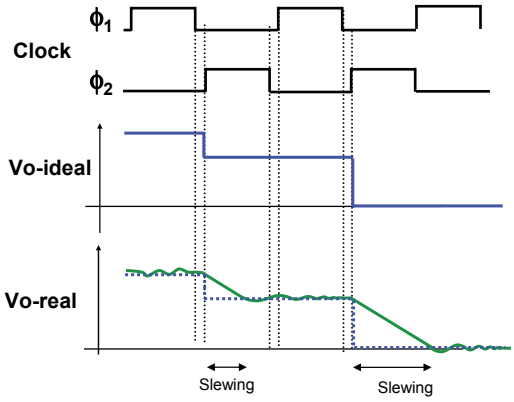

2nd Order ΣΔ
Effect of Slew Limited Settling

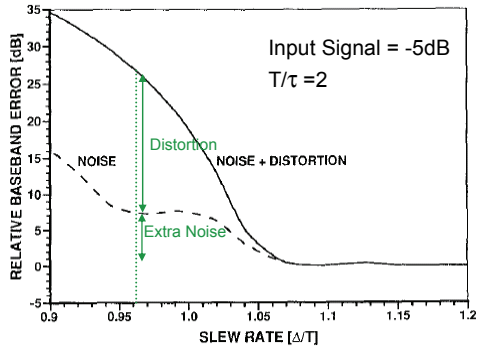

Assumption:

Opamp settling → includes a single-pole setting of $\tau = 1/2f_s$ + slewing

→ Low slew rate degrades SNR rapidly- increases quantization noise and also causes signal distortion

→ Minimum slew rate of $S_R^{min} \sim 1.2\ (\Delta \times f_s)$ required

Ref: B.E. Boser et. al, "The Design of Sigma-Delta Modulation A/D Converters," JSSC, Dec. 1988.

2nd Order ΣΔ
Implementation Example: Digital Audio Application

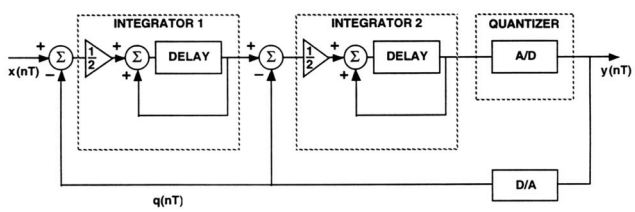

- In Ref.: 5V supply, Δ = 4Vp-p-d, f_s=12.8MHz→ M=256 → theoretical quantization noise @-110dB
- Minimum capacitor values computed based on -104dB noise wrt maximum signal
  - → Max. inband KT/C noise = 7$\mu Vrms$ (thermal noise dominates → provide dithering & reduce limit cycle oscillations)
  - → $C1=(2kT)/(M\, v_n^2)=1pF \quad C2=2C1$

Ref: B. P. Brandt, et. al, "Second-order sigma-delta modulation for digital-audio signal acquisition," IEEE Journal of Solid-State Circuits, vol. 26, pp. 618 - 627, April 1991.

2nd Order ΣΔ
Implementation Example: Integrator Opamp

- Class A/B type opamp → High slew-rate
- S.C. common-mode feedback
- Input referred noise (both thermal and 1/f) important for high resolution performance
- Minimum required DC gain> M=256 , usually DC gain designed to be much higher to suppress nonlinearities (particularly, for class A/B amps)
- Minimum required slew rate of $1.2(\Delta.f_s)$ → 65V/usec
- Minimum opamp settling time constant → 1/2fs~30nsec

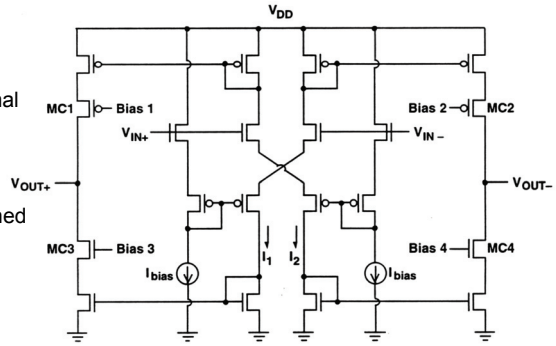

Ref: B. P. Brandt, et. al, "Second-order sigma-delta modulation for digital-audio signal acquisition," IEEE Journal of Solid-State Circuits, vol. 26, pp. 618 - 627, April 1991.

2nd Order ΣΔ
Implementation Example: Comparator

- Comparator → simple design
- Maximum acceptable hysteresis or offset (based on analysis) → $\Delta/25 \sim 160$mV
- Have to make sure adequate speed for the chosen sampling freq.

→Since offset requirement not stringent→ No preamp needed, basically a latch with reset

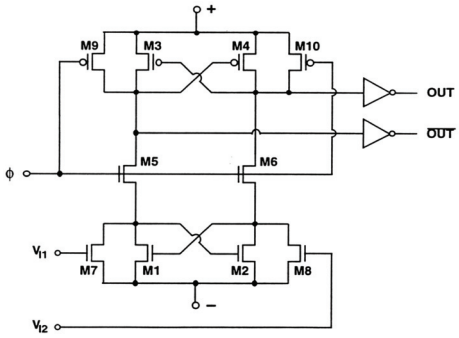

Ref: B. P. Brandt, et. al, "Second-order sigma-delta modulation for digital-audio signal acquisition," IEEE Journal of Solid-State Circuits, vol. 26, pp. 618 - 627, April 1991.

2nd Order ΣΔ
Implementation Example: Subcircuit Performance

Subcircuit Performance		Our computed minimum required	Over-Design Factor
Operational Amplifier			
DC gain	**67 dB**	DC Gain 48dB (compensates non-linear open-loop gain)	x8
Unity-gain frequency	**50 MHz**	Unity-gain freq =2fs=25MHz	x2
Slew rate	**350 V/μsec**	Slew rate = 65V/usec	x5
Linear output range	**6 V**	Output range 1.7Δ=6.8V!	X0.9
Sampling rate	**12.8 MHz**		
Integrator			
Settling time constant	**7.25 nsec**	Settling time constant= 30nsec	x4
Comparator			
Offset	**13 mV**	Comparator offset 160mV	x12

Ref: B. P. Brandt, et. al, "Second-order sigma-delta modulation for digital-audio signal acquisition," IEEE Journal of Solid-State Circuits, vol. 26, pp. 618 - 627, April 1991.

2nd Order ΣΔ
Implementation Example: Digital Audio Applications

Measured SNDR

M=256, 0dB=4$V_{p\text{-}p\text{-}d}$

$f_{sampling}$: 12.8MHz

Test signal frequency: 2.8kHz

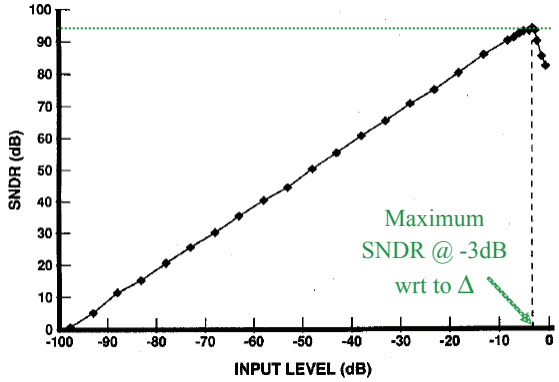

Ref: B. P. Brandt, et. al, "Second-order sigma-delta modulation for digital-audio signal acquisition," IEEE Journal of Solid-State Circuits, vol. 26, pp. 618 - 627, April 1991.

2nd Order ΣΔ
Implementation Example: Digital Audio Applications

Measured Performance Summary
(Does Not Include Decimator)

Dynamic Range	98 dB (16 b)
Peak SNDR	94 dB
Sampling Rate	12.8 MHz
Oversampling Ratio	256
Output Rate	50 kHz
Signal Band	23 kHz
Differential Input Range	4 V
Supply Voltage	5 V
Power Supply Rejection	60 dB
Power Dissipation	13.8 mW
Area	0.39 mm^2
Technology	1-μm CMOS

Ref: B. P. Brandt, et. al, "Second-order sigma-delta modulation for digital-audio signal acquisition," IEEE Journal of Solid-State Circuits, vol. 26, pp. 618 - 627, April 1991.

2nd Order ΣΔ
Implementation Example: Digital Audio Applications

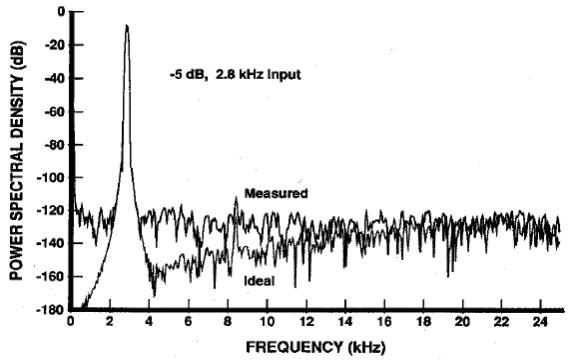

Ref: B. P. Brandt, et. al, "Second-order sigma-delta modulation for digital-audio signal acquisition," IEEE Journal of Solid-State Circuits, vol. 26, pp. 618 - 627, April 1991.

2nd Order ΣΔ
Implementation Example: Digital Audio Applications

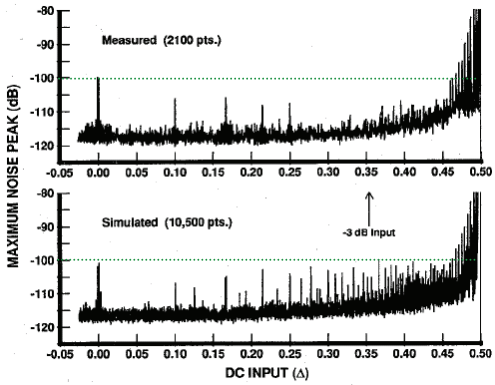

→ Measured & simulated in-band spurious tones as a function of DC input signal
→ Sampling rate=12.8MHz, M=256

Ref: B. P. Brandt, et. al, "Second-order sigma-delta modulation for digital-audio signal acquisition," IEEE Journal of Solid-State Circuits, vol. 26, pp. 618 - 627, April 1991.

2nd Order ΣΔ
Implementation Example: Digital Audio Applications

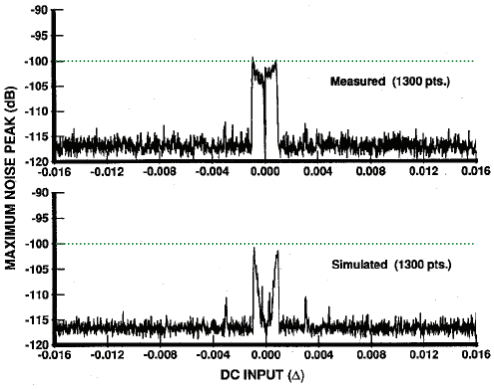

Sampling rate=12.8MHz, M=256

→ Measured & simulated noise tone performance for near zero DC worst case input → 0.00088Δ

Ref: B. P. Brandt, et. al, "Second-order sigma-delta modulation for digital-audio signal acquisition," IEEE Journal of Solid-State Circuits, vol. 26, pp. 618 - 627, April 1991.

2nd Order ΣΔ
Implementation Example: Digital Audio Applications

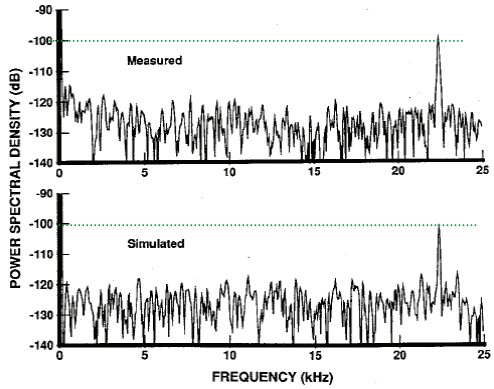

→ Measured & simulated worst-case noise tone @ DC input of 0.00088Δ
→ Both indicate maximum tone @ 22.5kHz around -100dB level

Ref: B. P. Brandt, et. al, "Second-order sigma-delta modulation for digital-audio signal acquisition," IEEE Journal of Solid-State Circuits, vol. 26, pp. 618 - 627, April 1991.

Higher Order ΣΔ Modulator Dynamic Range

$$Y(z) = z^{-1}X(z) + \left(1 - z^{-1}\right)^L E(z) \quad , \quad L \rightarrow \Sigma\Delta \text{ order}$$

$$\overline{S_X} = \frac{1}{2}\left(\frac{\Delta}{2}\right)^2 \qquad \text{sinusoidal input,} \quad STF = 1$$

$$\overline{S_Q} = \frac{\pi^{2L}}{2L+1}\frac{1}{M^{2L+1}}\frac{\Delta^2}{12}$$

$$\frac{\overline{S_X}}{\overline{S_Q}} = \frac{3(2L+1)}{2\pi^{2L}}M^{2L+1}$$

$$DR = 10\log\left[\frac{3(2L+1)}{2\pi^{2L}}M^{2L+1}\right]$$

$$\boxed{DR = 10\log\left[\frac{3(2L+1)}{2\pi^{2L}}\right] + (2L+1)\times 10\times\log M}$$

$2X$ increase in M→$(6L+3)$dB or $(L+0.5)$-bit increase in DR

ΣΔ Modulator Dynamic Range As a Function of Modulator Order

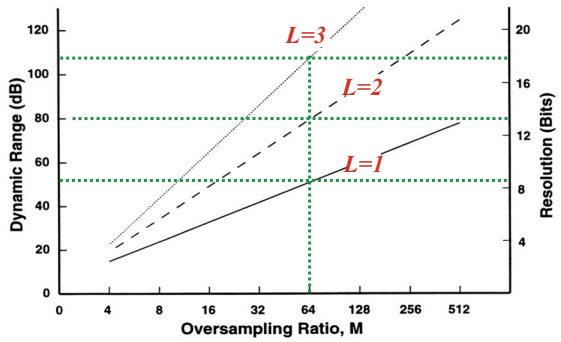

- Potential stability issues for L >2

Higher Order ΣΔ Modulators

- Extending ΣΔ Modulators to higher orders by adding integrators in the forward path (similar to 2nd order)
  → Issues with stability
- Two different architectural approaches used to implement ΣΔ modulators with order >2
  1. Cascade of lower order modulators (multi-stage)
  2. Single-loop single-quantizer modulators with multi-order filtering in the forward path

Higher Order ΣΔ Modulators
(1) Cascade of 2-Stages ΣΔ Modulators

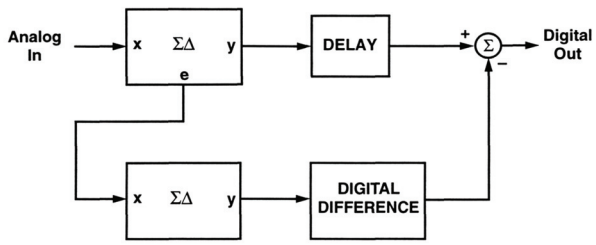

- Main ΣΔ quantizes the signal
- The 1st stage quantization error is then quantized by the 2nd quantizer
- The quantized error is then subtracted from the results in the digital domain

2nd Order (1-1) Cascaded ΣΔ Modulators

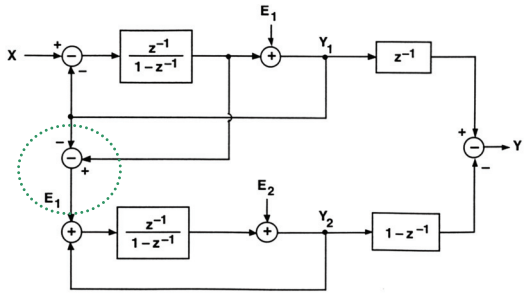

$$Y_1(z) = z^{-1}X(z) + (1 - z^{-1})E_1(z)$$

$$Y_2(z) = z^{-1}E_1(z) + (1 - z^{-1})E_2(z)$$

$$Y(z) = z^{-1}Y_1(z) - (1 - z^{-1})Y_2(z)$$

$$= z^{-2}X(z) + z^{-1}(1 - z^{-1})E_1(z) - z^{-1}(1 - z^{-1})E_1(z) - (1 - z^{-1})^2E_2(z)$$

$$\boxed{Y(z) = z^{-2}X(z) - (1 - z^{-1})^2E_2(z)}$$

2nd order noise shaping

3rd Order Cascaded ΣΔ Modulators
(a) Cascade of 1-1-1 ΣΔs

- Can implement 3rd order noise shaping with 1-1-1
- This is also called MASH (multi-stage noise shaping)

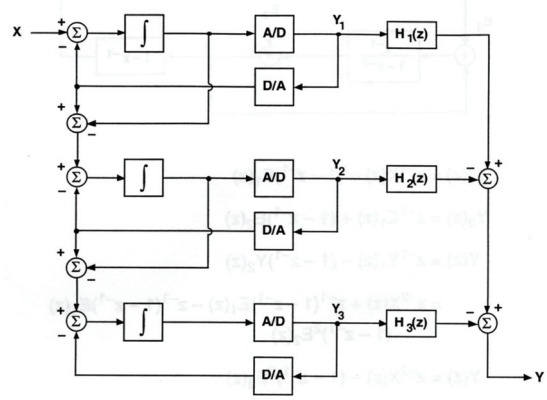

3rd Order Cascaded ΣΔ Modulators
(b) Cascade of 2-1 ΣΔs

Advantages of 2-1 cascade compared to 1-1-1-:

- Low sensitivity to matching precision of analog/digital paths
- Low spurious limit cycle tone levels
- No potential instability

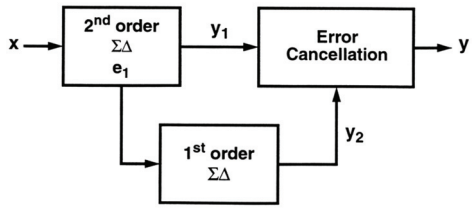

$$Y_1(z) = z^{-2}X(z) + (1 - z^{-1})^2 E_1(z)$$

$$Y_2(z) = z^{-1}E_1(z) + (1 - z^{-1})E_2(z)$$

$$Y(z) = z^{-1}Y_1(z) - (1 - z^{-1})^2 Y_2(z)$$

$$= z^{-3}X(z) + z^{-1}(1 - z^{-1})^2 E_1(z) - z^{-1}(1 - z^{-1})^2 E_1(z) - (1 - z^{-1})^3 E_2(z)$$

3rd order noise shaping ⟹ $\boxed{Y(z) = z^{-3}X(z) - (1 - z^{-1})^3 E_2(z)}$

Sensitivity of Cascade of (1-1-1) ΣΔ Modulators to Matching of Analog & Digital Paths

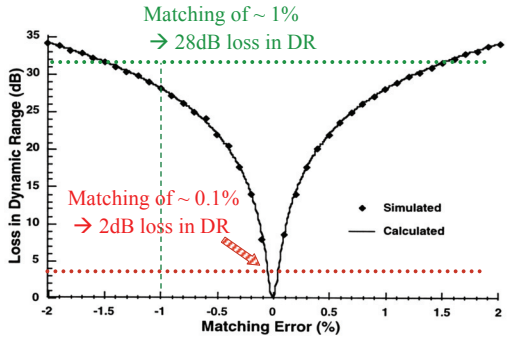

Sensitivity of Cascade of (2-1) ΣΔ Modulators to Matching Error

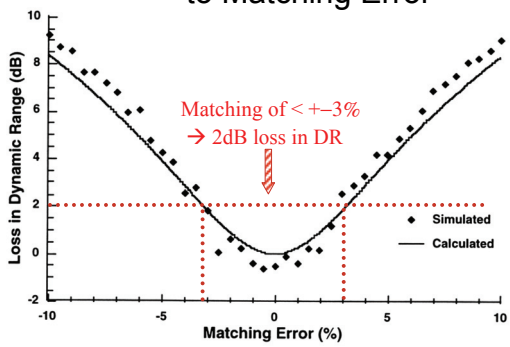

Main advantage of 2-1 cascade compared to 1-1-1 topology:

- Low sensitivity to matching of analog/digital paths (in excess of one order of magnitude less sensitive compared to (1-1-1)!)

2-1 Cascaded ΣΔ Modulators

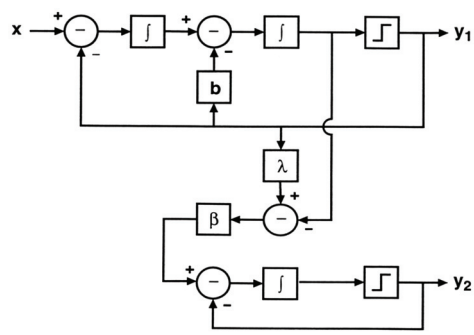

Ref: L. A. Williams III and B. A. Wooley, "A third-order sigma-delta modulator with extended dynamic range," *IEEE Journal of Solid-State Circuits,* vol. 29, pp. 193 - 202, March 1994.

2-1 Cascaded ΣΔ Modulators

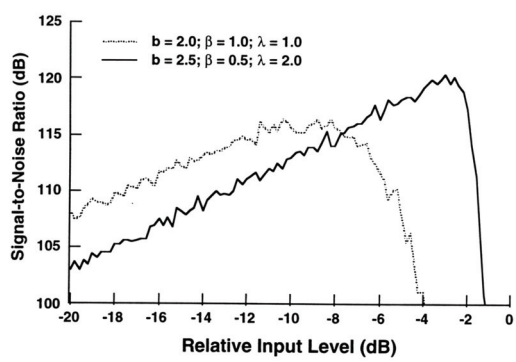

Effect of gain parameters on signal-to-noise ratio

Comparison of 2nd order & Cascaded (2-1) ΣΔ Modulator

Digital Audio Application, $f_N = 50kHz$ *(Does not include Decimator)*		
Reference	Brandt ,JSSC 4/91	Williams, JSSC 3/94
Architecture	*2nd order*	*(2+1) Order*
Dynamic Range	*98dB (16-bits)*	*104dB (17-bits)*
Peak SNDR	*94dB*	*98dB*
Oversampling rate	*256 (theoretical → SNR=109dB)*	*128 (theoretical → SNR=128dB)*
Differential input range	*4Vppd* *5V supply*	*8Vppd* *5V supply*
Power Dissipation	*13.8mW*	*47.2mW*
Active Area	*0.39mm²* (1μ tech.)	*5.2mm²* (1μ tech.)

2-1 Cascaded ΣΔ Modulators
Measured Dynamic Range Versus Oversampling Ratio

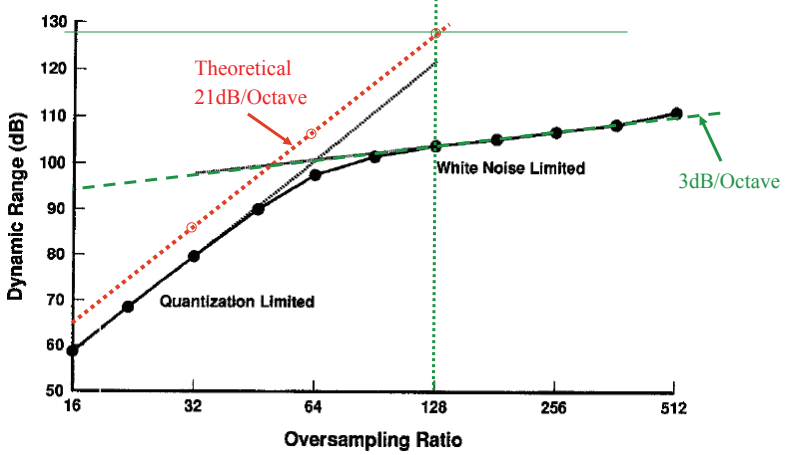

Ref: L. A. Williams III and B. A. Wooley, "A third-order sigma-delta modulator with extended dynamic range," *IEEE Journal of Solid-State Circuits,* vol. 29, pp. 193 - 202, March 1994.

Higher Order ΣΔ Modulators
(1) Cascaded Modulators Summary

- Cascade two or more stable ΣΔ stages
- Quantization error of each stage is quantized by the succeeding stage/s and subtracted digitally
- Order of noise shaping equals sum of the orders of the stages
- Quantization noise cancellation depends on the precision of analog/digital signal paths
- Quantization noise further randomized → less limit cycle oscillation problems
- Typically, no potential instability

Higher Order ΣΔ Modulators
(2) Multi-Order Filter

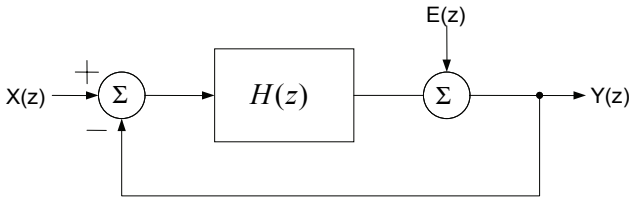

$$Y(z) = \frac{H(z)}{1+H(z)}X(z) + \frac{1}{1+H(z)}E(z)$$

$$NTF = \frac{Y(z)}{E(z)} = \frac{1}{1+H(z)}$$

- Zeros of NTF (poles of H(z)) can be strategically positioned to suppress in-band noise spectrum
- Approach: Design NTF first and solve for H(z)

Example: Modulator Specification

- Example: Audio ADC
  - Dynamic range — DR — 18 Bits
  - Signal bandwidth — B — 20 kHz
  - Nyquist frequency — f_N — 44.1 kHz
  - Modulator order — L — 5
  - Oversampling ratio — $M = f_s/f_N$ — 64
  - Sampling frequency — f_s — 2.822 MHz

- The order L and oversampling ratio M are chosen based on
  - SQNR > 120dB

Noise Transfer Function, NTF(z)

```
% stop-band attenuation Rstop=80dB, L=5 ...
L=5;
Rstop = 80;
B=20000;
[b,a] = cheby2(L, Rstop, B, 'high');

% normalize
b = b/b(1);
NTF = filt(b, a, ...);
```

Chebychev II filter chosen
→ zeros in stop-band

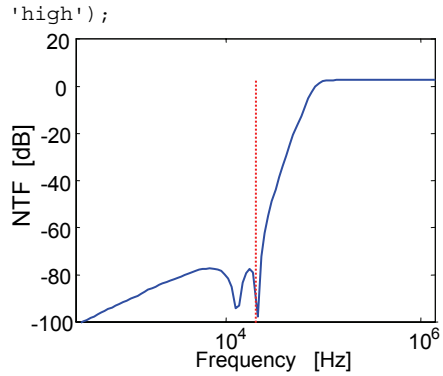

Loop-Filter Characteristics H(z)

$$NTF = \frac{Y(z)}{E(z)} = \frac{1}{1+H(z)}$$

$$\rightarrow H(z) = \frac{1}{NTF} - 1$$

Note: For 1st order ΣΔ an integrator is used instead of the high order filter shown

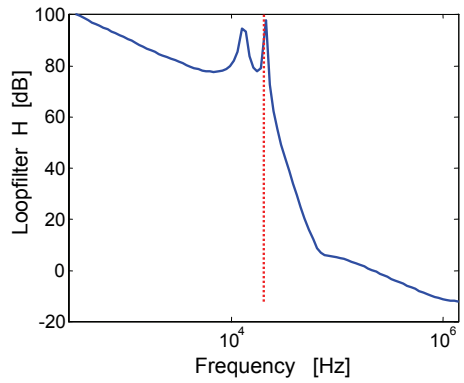

Modulator Topology Simulation Model

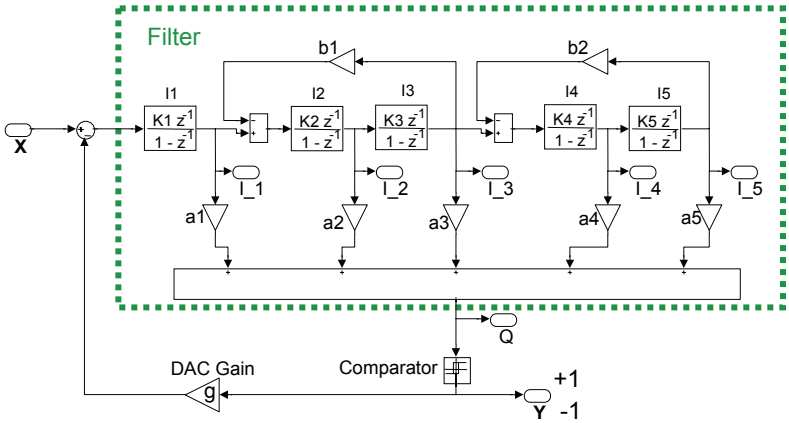

Filter Coefficients

```
a1=1;          k1=1;          b1=1/1024;
a2=1/2;        k2=1;          b2=1/16-1/64;
a3=1/4;        k3=1/2;
a4=1/8;        k4=1/4;
a5=1/8;        k5=1/8;        g =1;
```

Ref: Nav Sooch, Don Kerth, Eric Swanson, and Tetsuro Sugimoto, "Phase Equalization System for a Digital-to-Analog Converter Using Separate Digital and Analog Sections", U.S. Patent 5061925, 1990, figure 3 and table 1

5th Order Noise Shaping Simulation Results

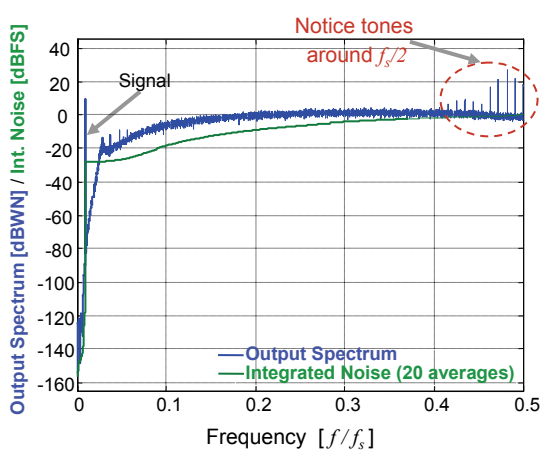

- Mostly quantization noise, except at low frequencies
- Let's zoom into the baseband portion…

5th Order Noise Shaping

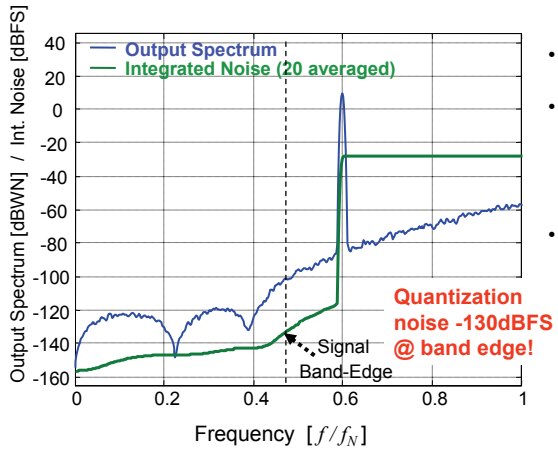

- SQNR > 120dB
- Sigma-delta modulators are usually designed for negligible quantization noise
- Other error sources dominate, e.g. thermal noise are allowed to dominate & thus provide dithering to eliminate limit cycle oscillations

In-Band Noise Shaping

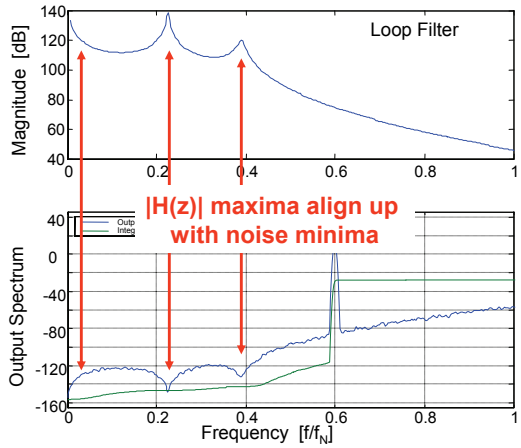

- Lot's of gain in the loop filter pass-band
- Forward path filter not necessarily stable!
- Remember that:
  - ✓NTF ~ 1/H→ small within passband since H is large
  - ✓STF=H/(1+H) → ~1 within passband