Complete Electrical-Port Equiv. Circuit

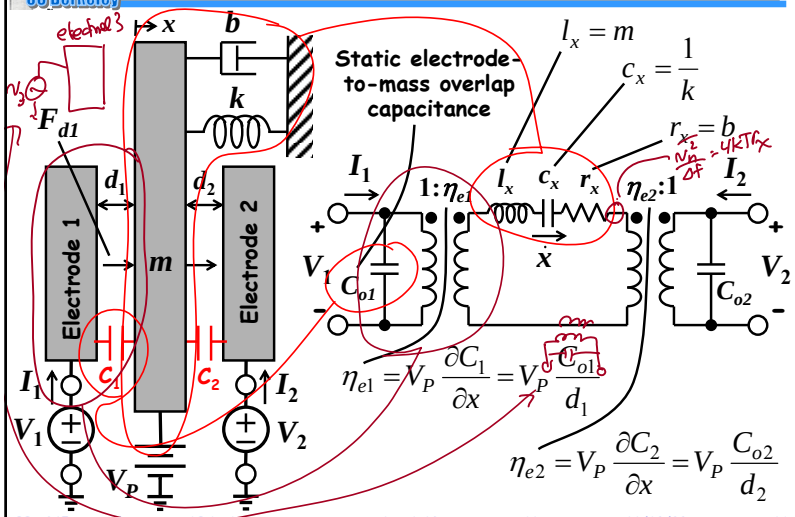

Condensed Equiv. Circuit (Symmetrical)

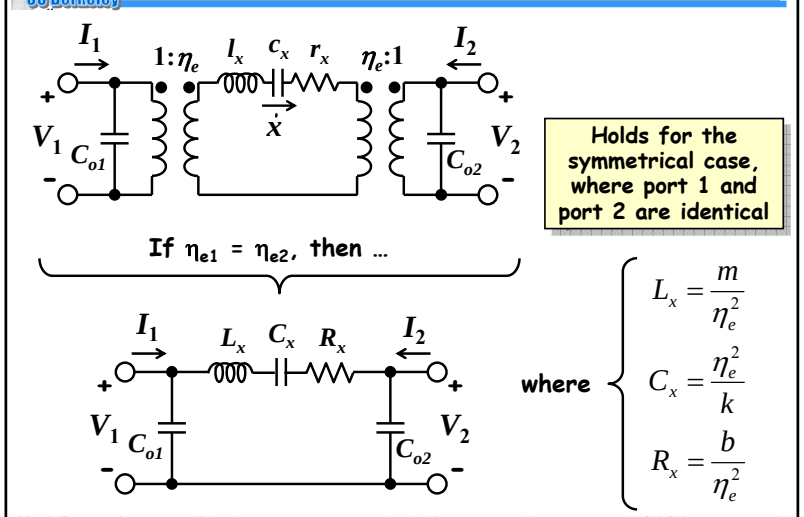

Phasings of Signals

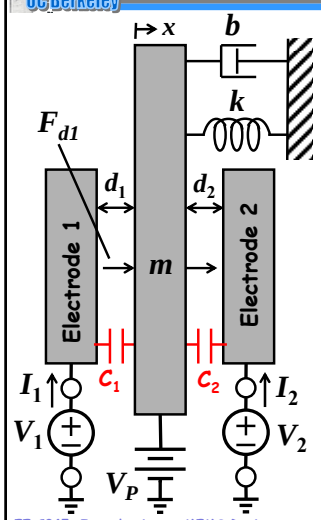

- Below: plots of resonance electrical and mechanical signals vs. time, showing the phasings between them

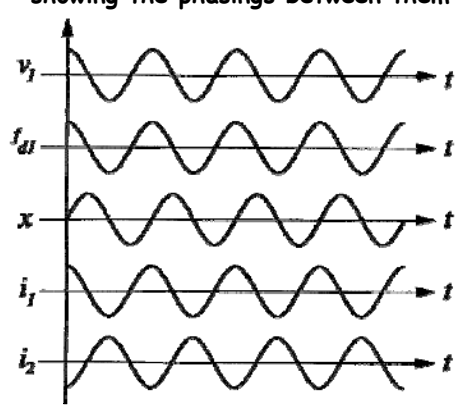

Copyright © 2015 Regents of the University of California