Phasings of Signals

- Below: plots of resonance electrical and mechanical signals vs. time, showing the phasings between them

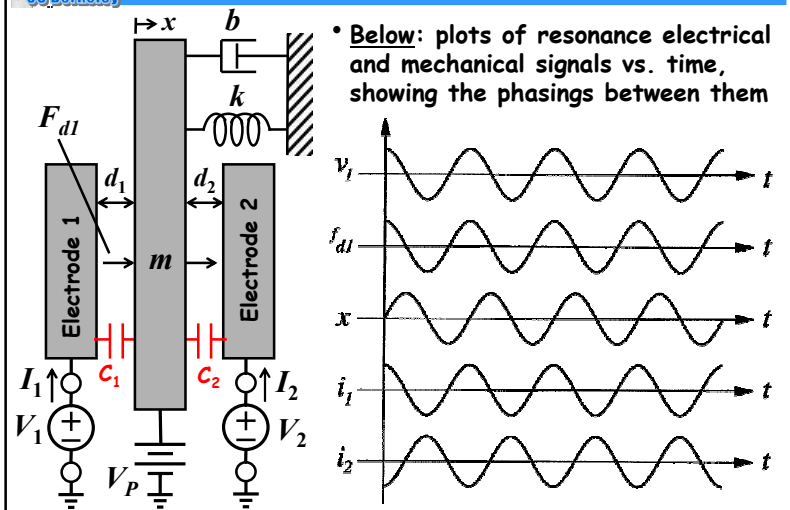

Complete Electrical-Port Equiv. Circuit

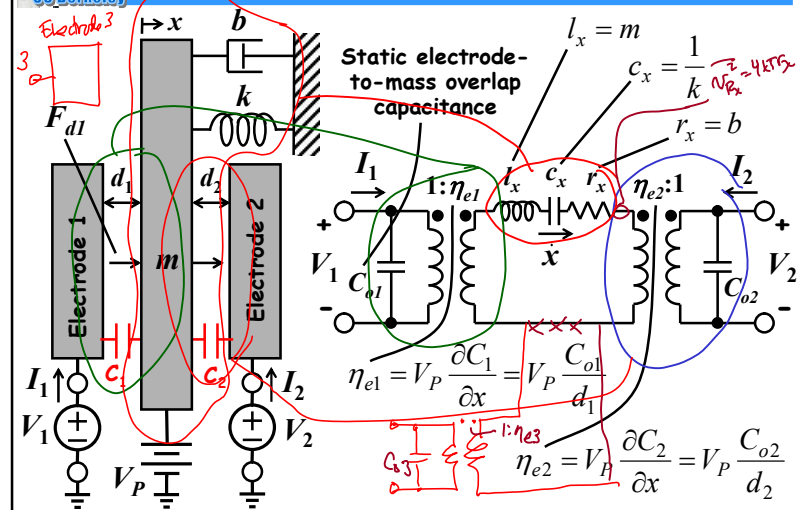

Condensed Equiv. Circuit (Symmetrical)

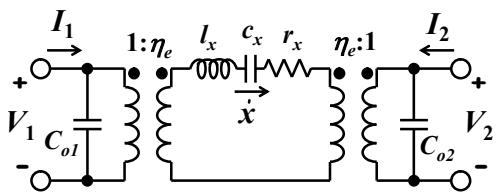

Holds for the symmetrical case, where port 1 and port 2 are identical

If $\eta_{e1} = \eta_{e2}$, then …

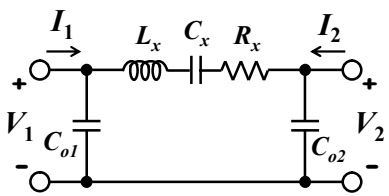

where
$$L_x = \frac{m}{\eta_e^2}, \quad C_x = \frac{\eta_e^2}{k}, \quad R_x = \frac{b}{\eta_e^2}$$

Copyright © 2018 Regents of the University of California