High-Level Development Tools

Data Flow

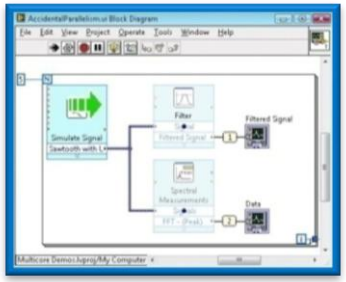

C Code

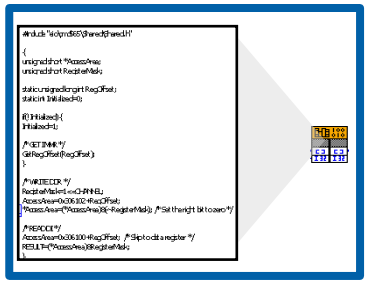

Textual Math

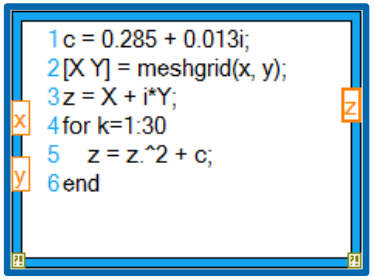

Modeling

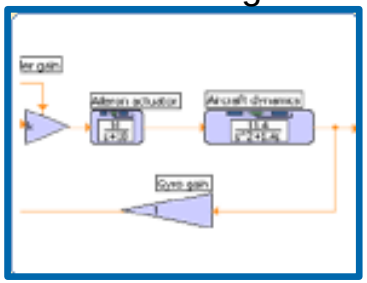

Statechart

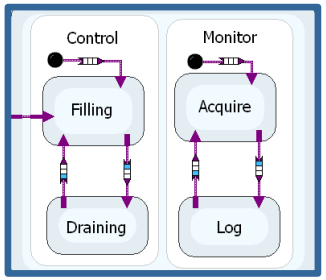

EE249 Lab

September 30h, 2008

Hugo A. Andrade

NATIONAL INSTRUMENTS

LabVIEW™

Graphical System Design Platform

Linux®

Macintosh

Windows

Desktop Platform

Real-Time

FPGA

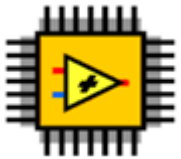

Micro

Embedded Platform

Virtual Instrumentation

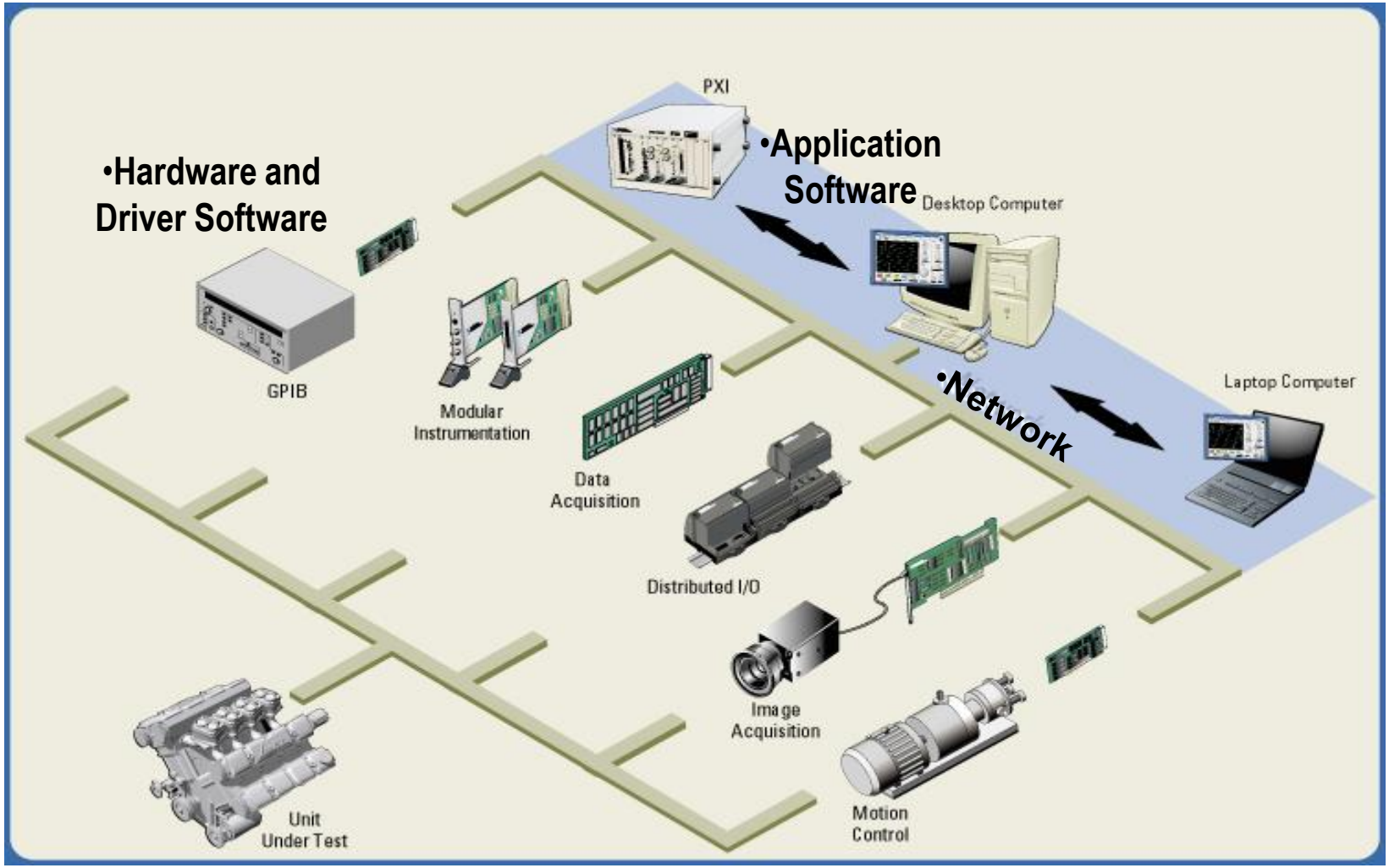

Virtual Instrumentation

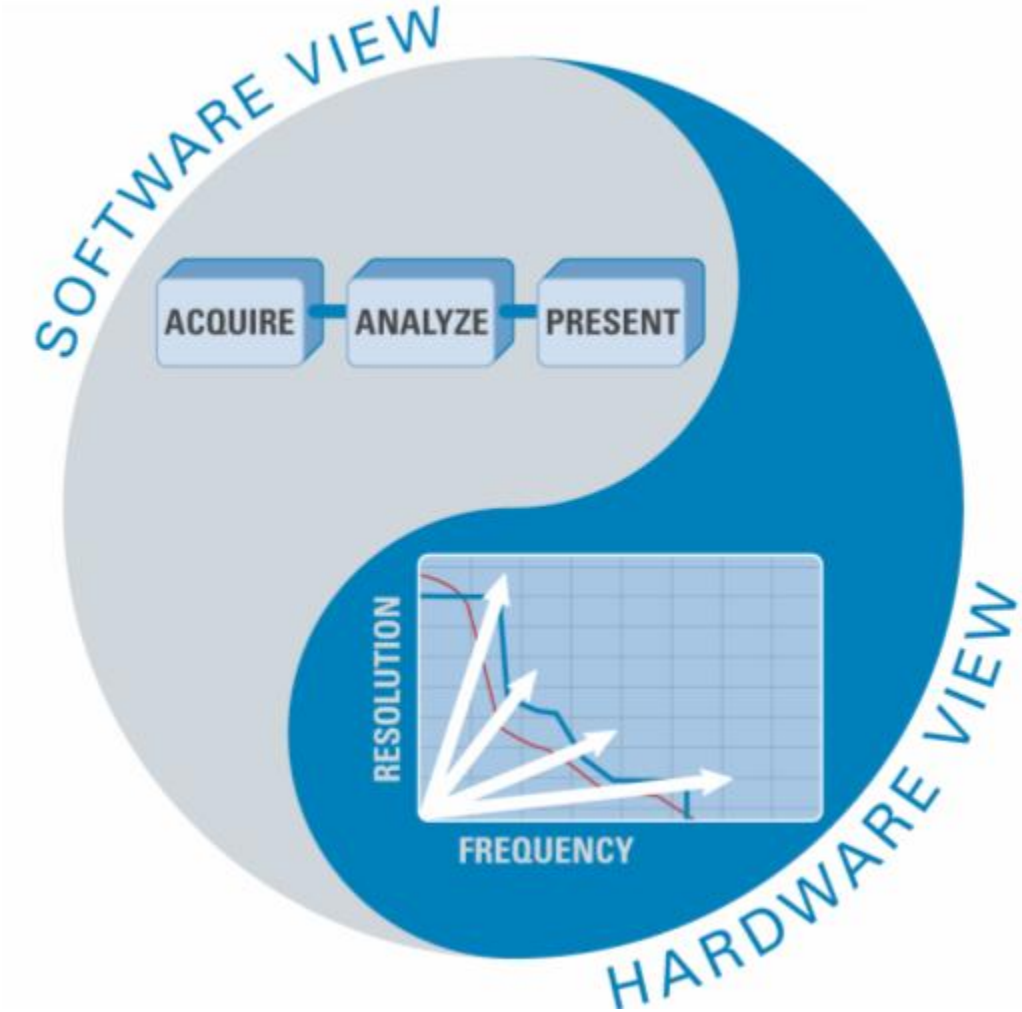

Graphical System Design Platform

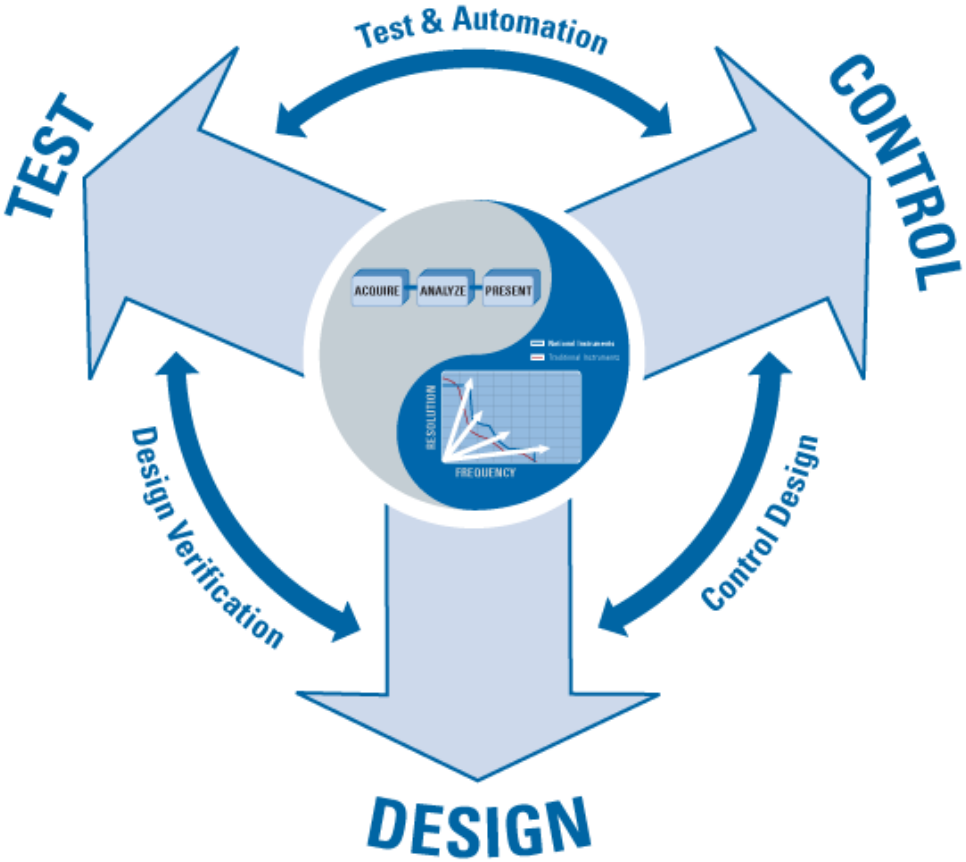

Graphical System Design Platform

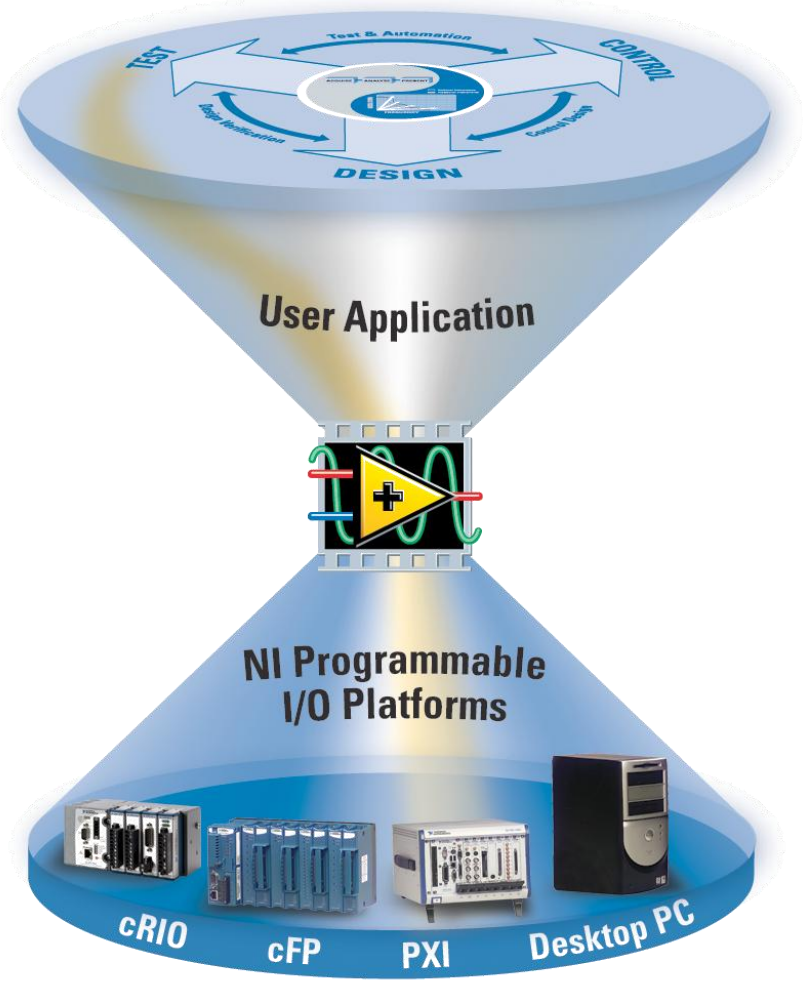

Graphical System Design Platform

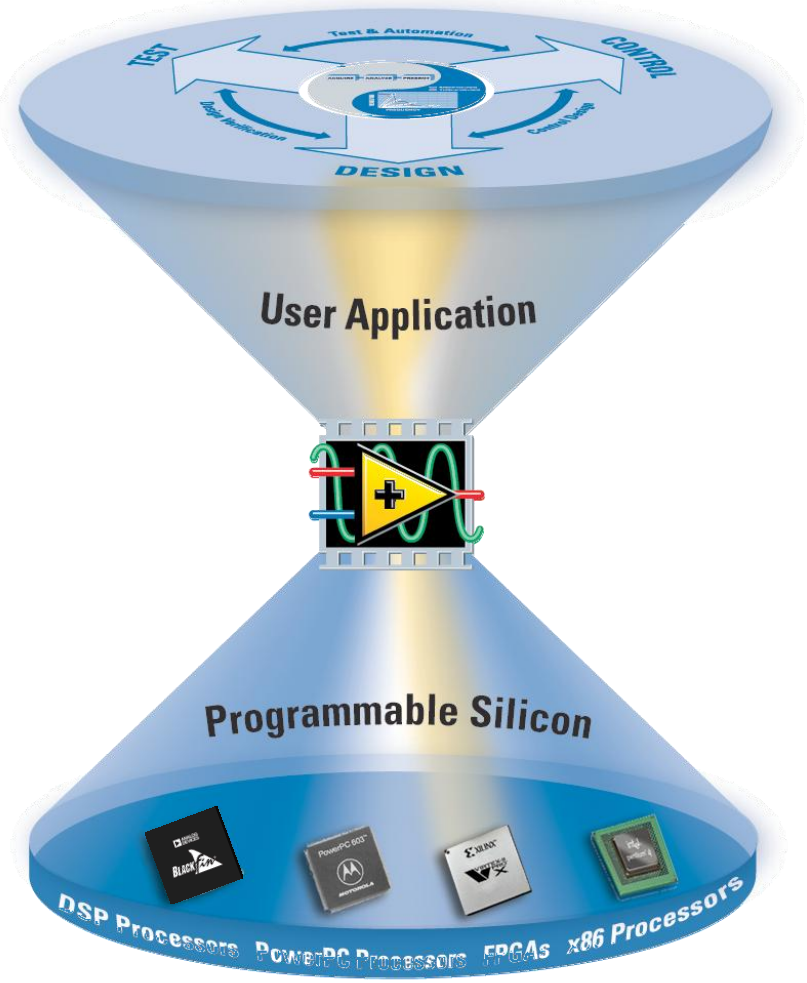

Graphical System Design Platfo

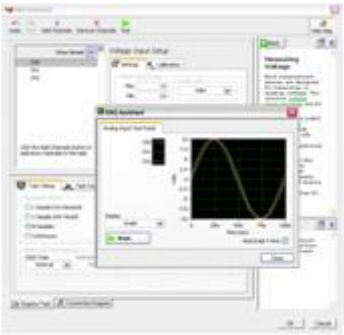

Configuration

Graphical Programming

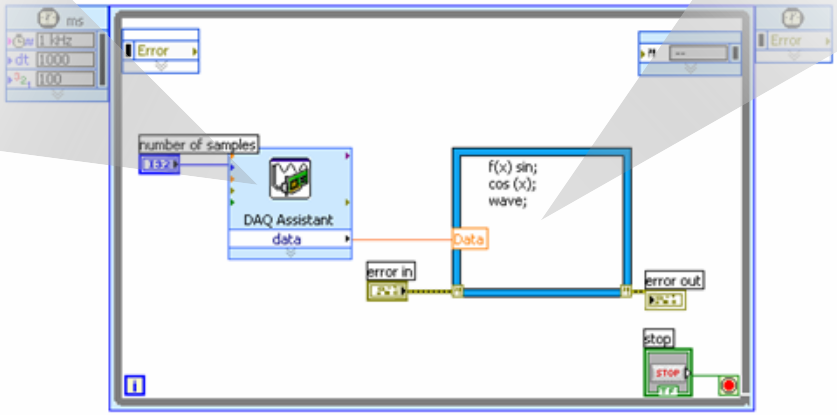

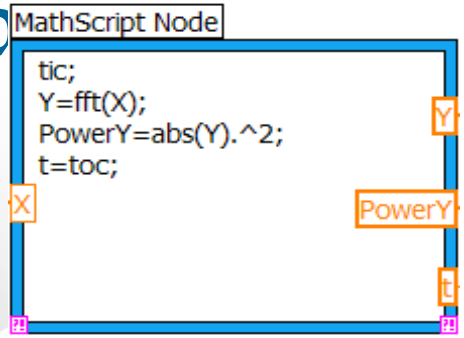

Textual Math

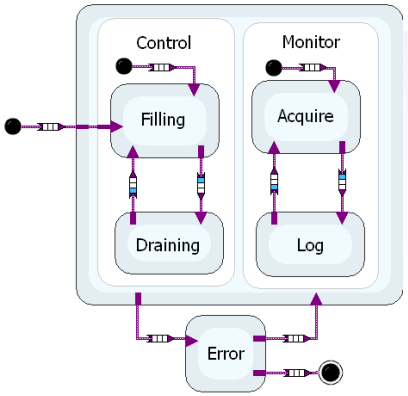

Statecharts

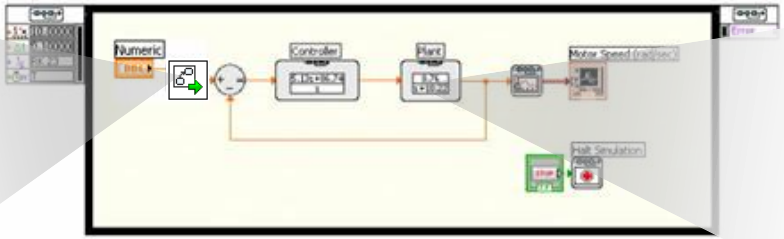

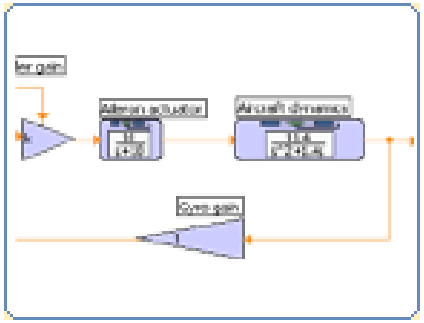

Modeling & Simulation

NATIONAL INSTRUMENTS LabVIEW™

The G (LabVIEW) Language Model

- Homogenous dataflow language
  - Structured case (switch, select) and loops
    - “Structured dataflow”
- Run-time scheduling
  - Explicit task level parallelism
  - Implicit parallelism heuristically identified
- Synthesizable language
  - To machine code on x86 and PPC processors
  - To VHDL for FPGAs
  - To C for embedded processors
- Turing complete

Evolution of LabVIEW Backend Technologies

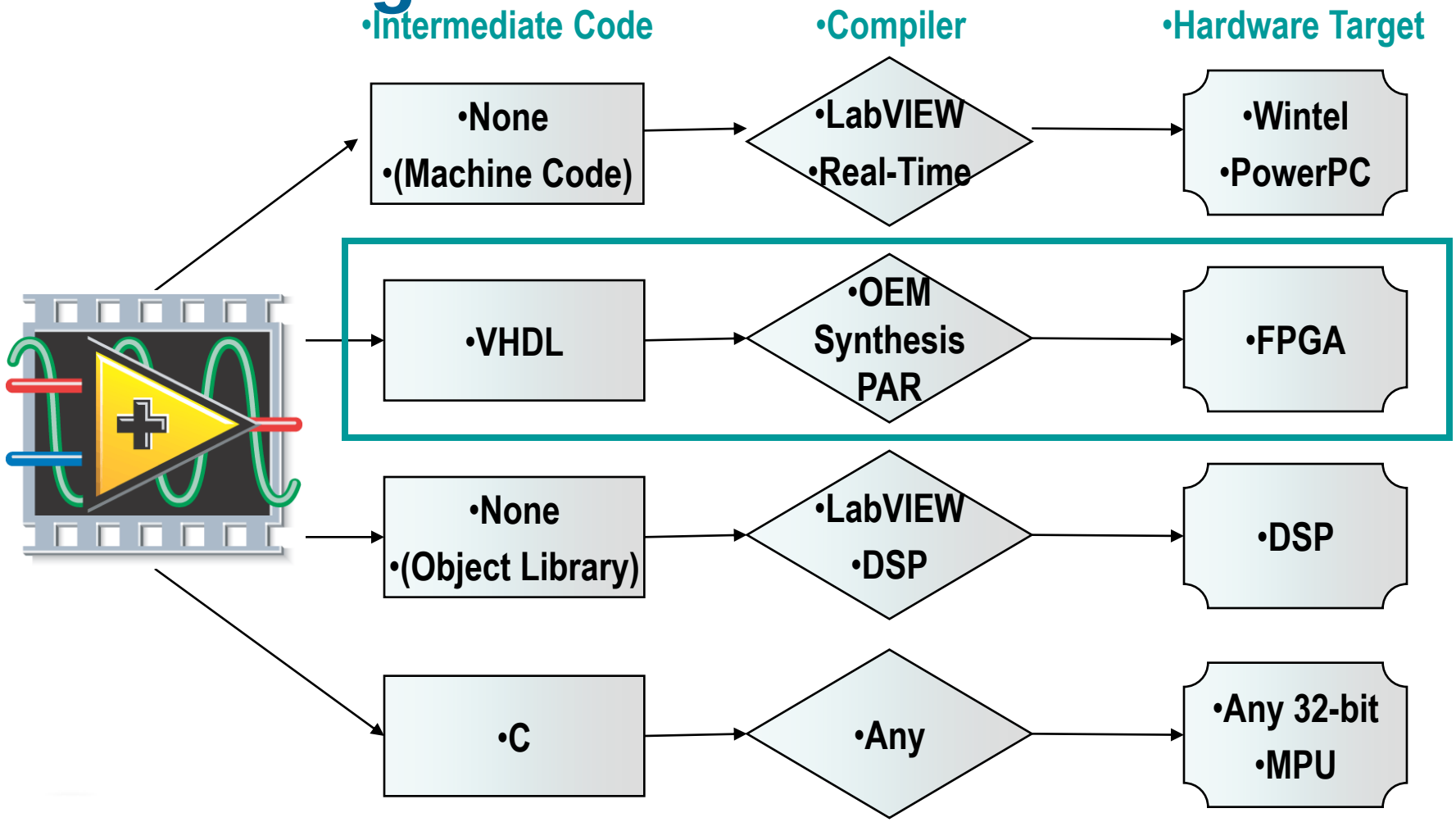

What is LabVIEW FPGA

- **LabVIEW FPGA Module**

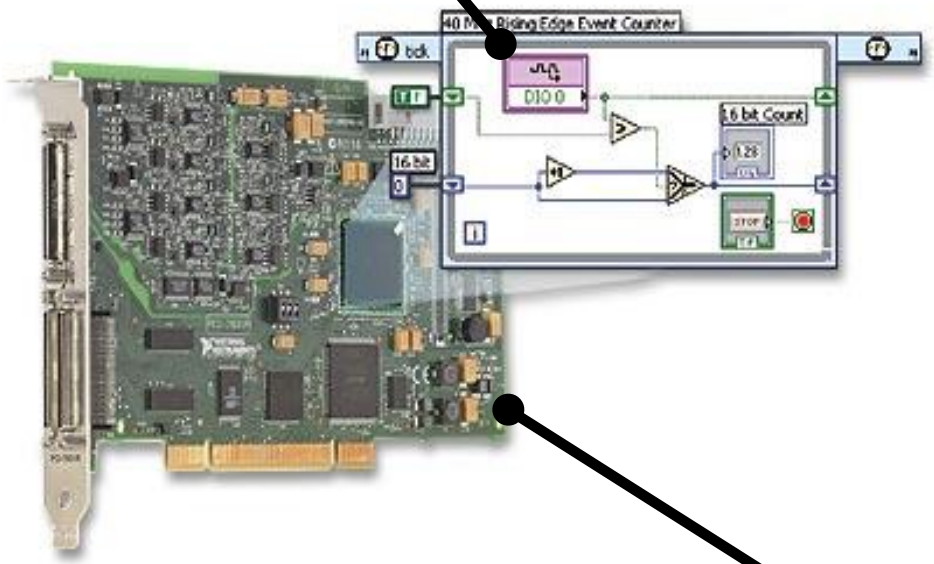

Reconfigurable I/O (RIO) Hardware

Enforcing Dataflow in FPGA

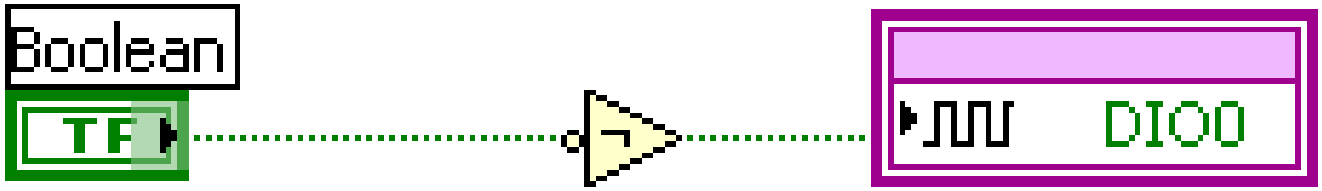

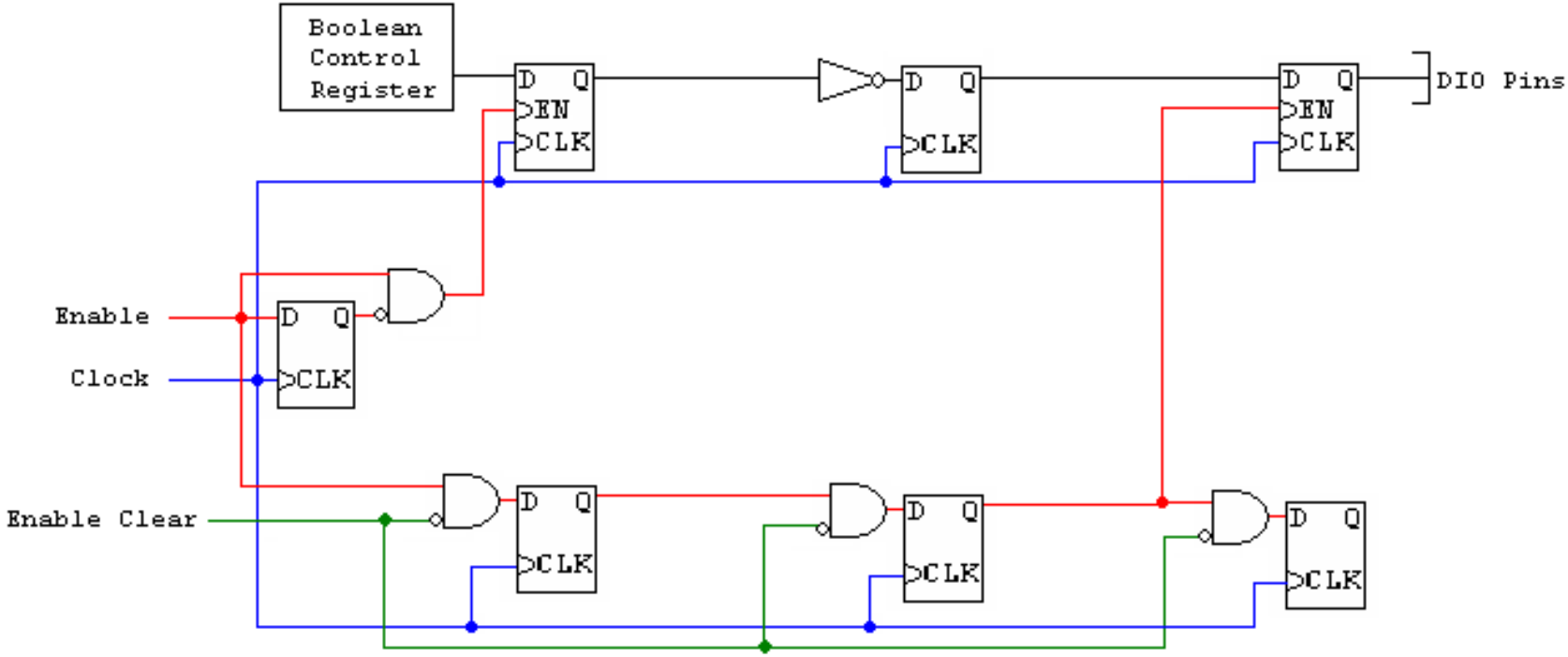

Developing Applications with the NI LabVIEW Statechart Module

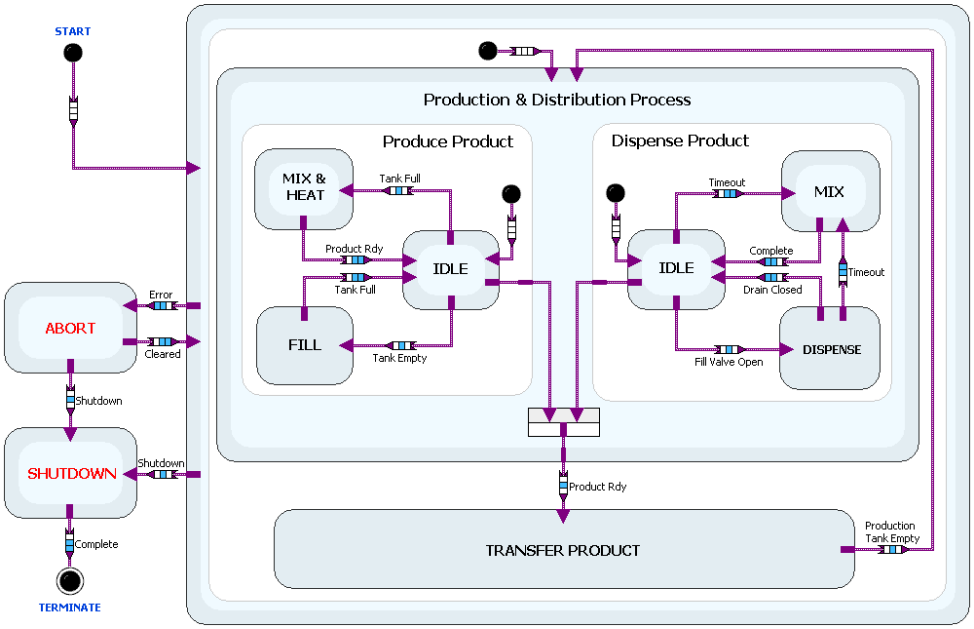

High-Level Development Tools

Data Flow

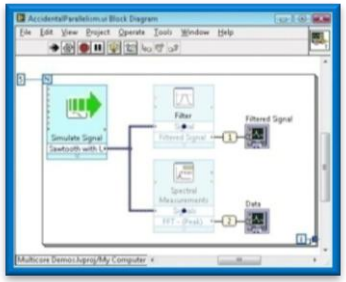

C Code

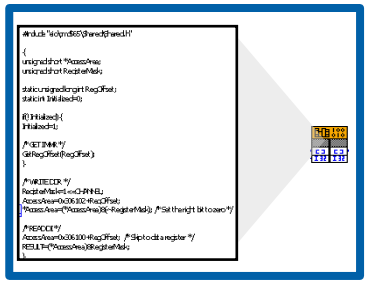

Textual Math

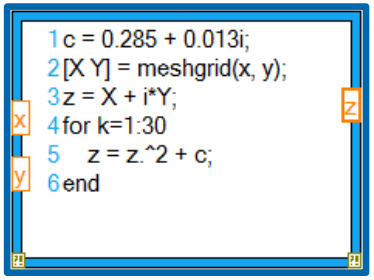

Modeling

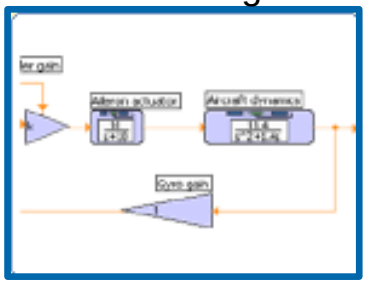

Statechart

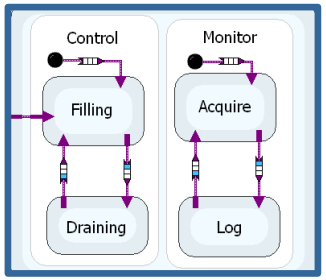

NATIONAL INSTRUMENTS

LabVIEW™

Graphical System Design Platform

Linux®

Macintosh

Windows

Desktop Platform

Real-Time

FPGA

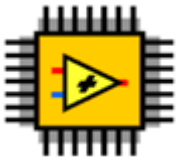

Micro

Embedded Platform

What are Statecharts?

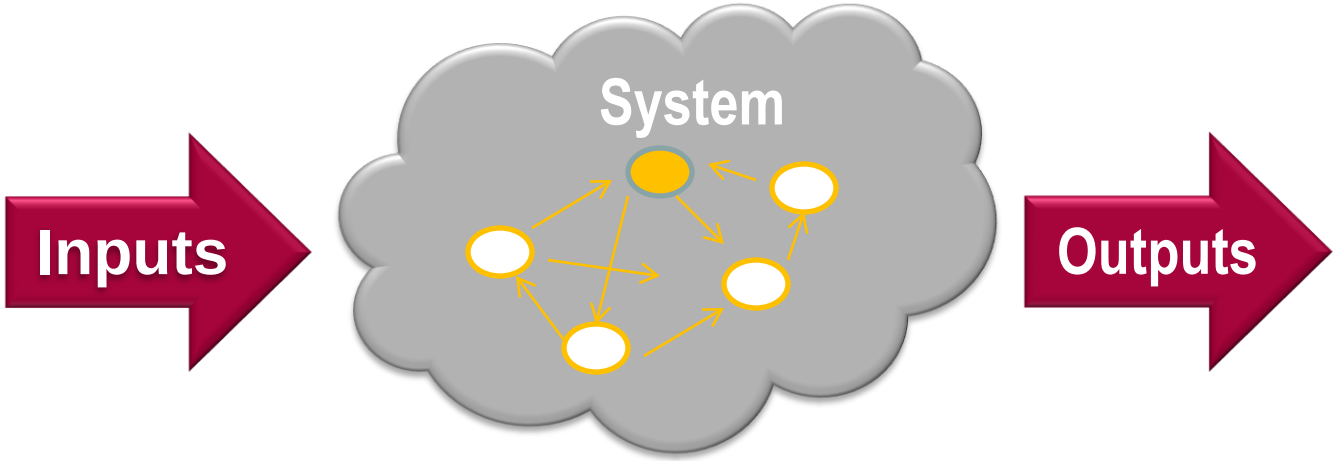

Statecharts are visual representations of reactive (event-based) systems.

Differences between Statecharts and FSMs

Both contain the same basic concepts:

- States
- Transitions

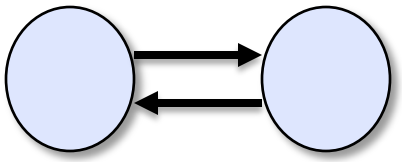

Statechart adds additional concepts:

- Hierarchy
- Concurrency
- Event-based paradigm
- Pseudostates & Connectors

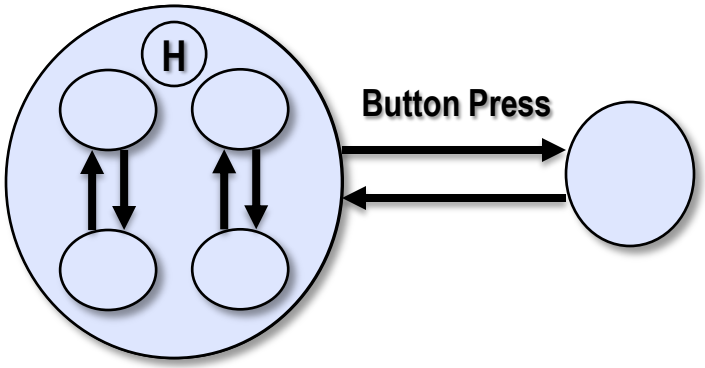

Based on the UML statechart diagram specification

Reactive Systems

- Communication systems
- Digital protocols
- Control applications
  - Sequential logic
  - Batch processing
  - Event response
  - Non-linear control
- User-interface implementation
- System modeling for virtual prototyping (simulation)

State Machines

Statechart Benefits

- Abstraction
  - Simple semantics to represent complex systems
  - System-level view
  - Self-documenting

Machine & Process Control

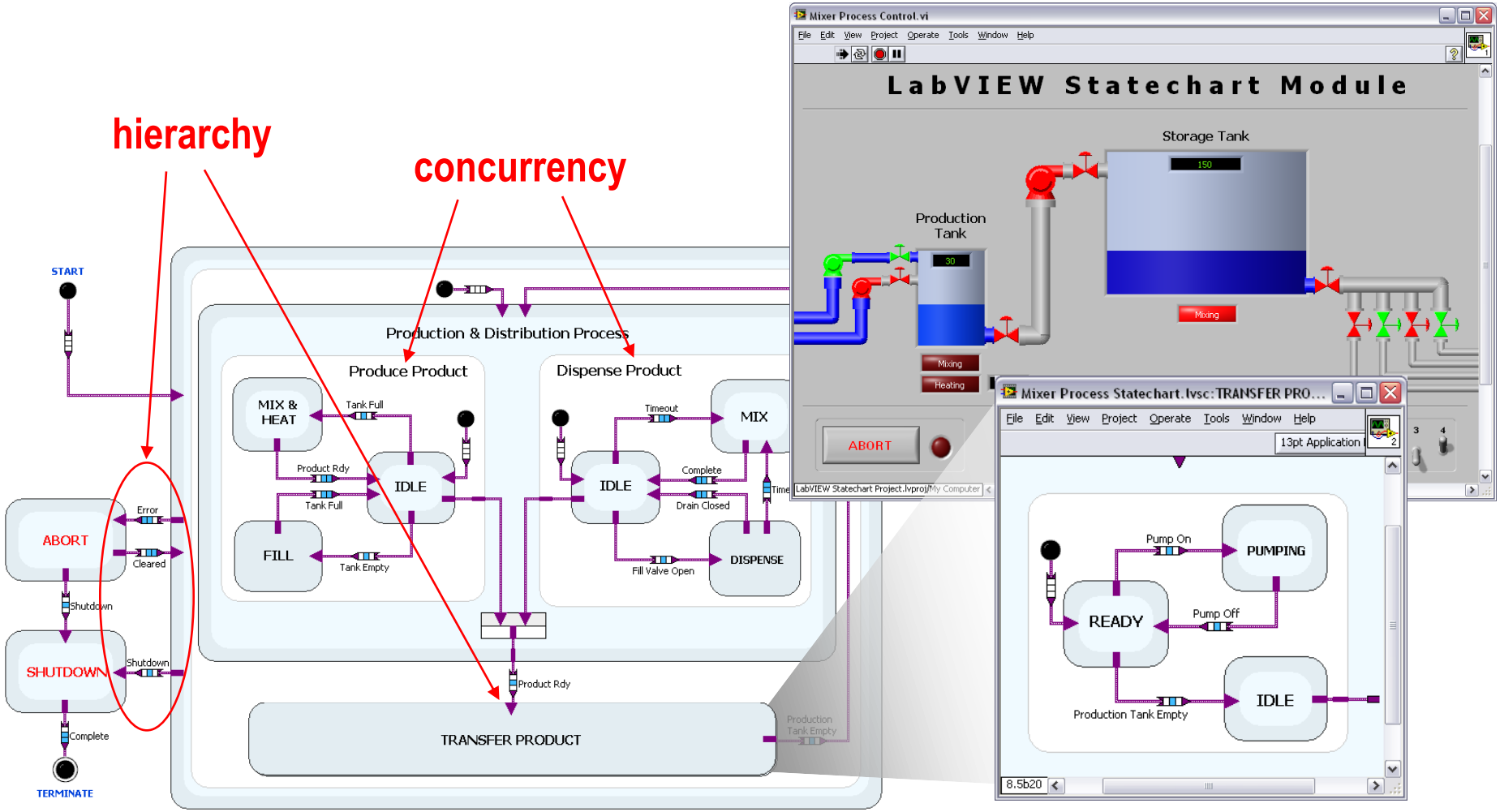

FPGA Logic

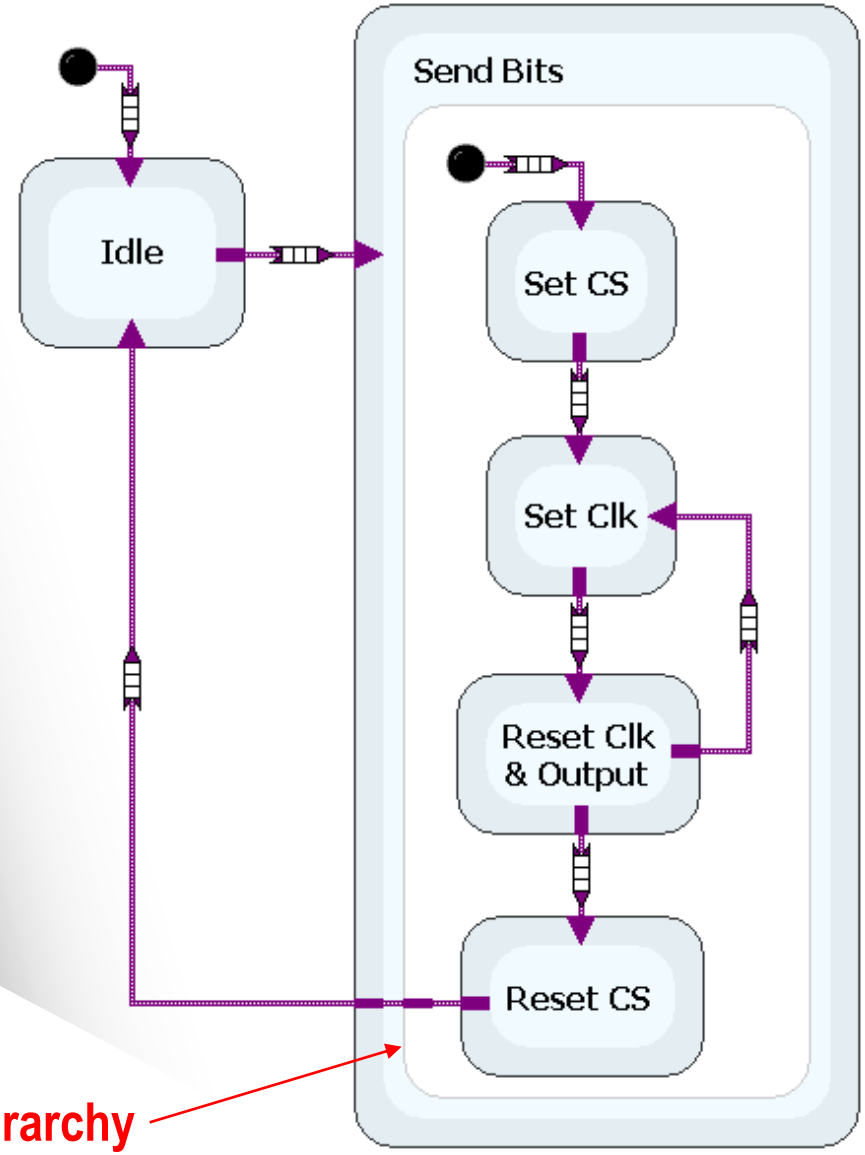

User Interfaces

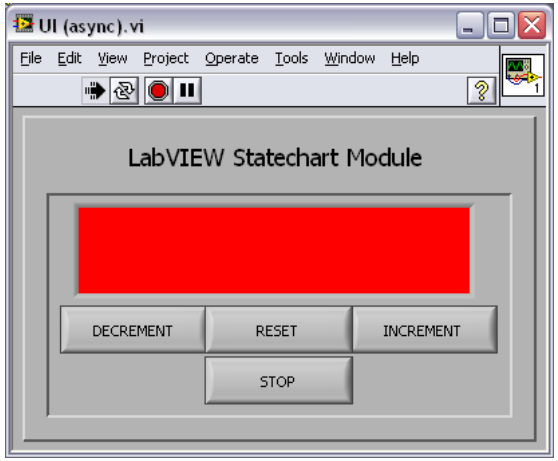

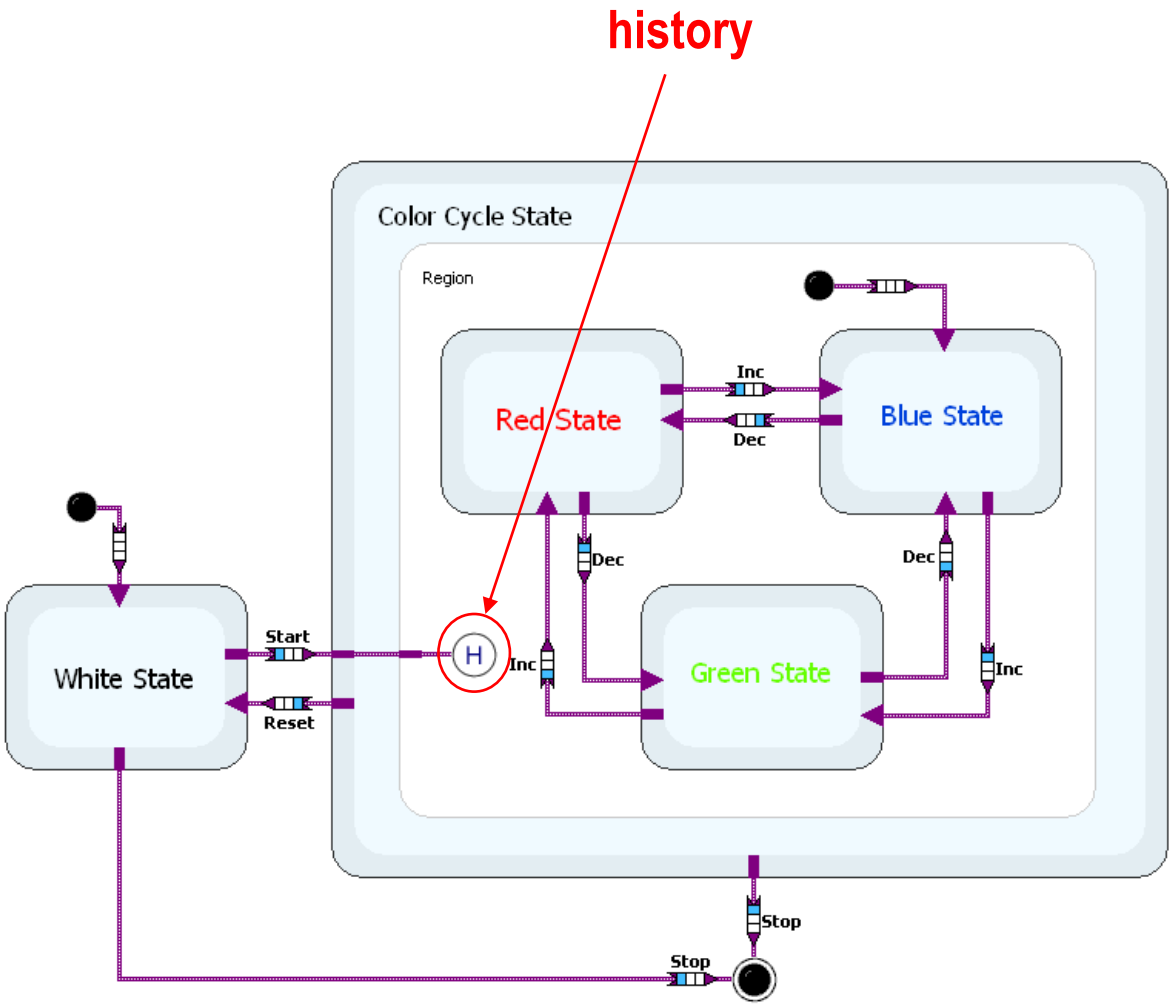

Statechart Benefits

- Abstraction
  - Simple semantics to represent complex systems
  - System-level view
  - Self-documenting
- Scalability
  - Easily extend applications
  - Open software platform
- Automatic Code Generation
  - LabVIEW Embedded Technology

LabVIEW Statechart Development

1. Build statechart
2. Define transitions and states
3. Generate statechart subVI
4. Place in LabVIEW block diagram

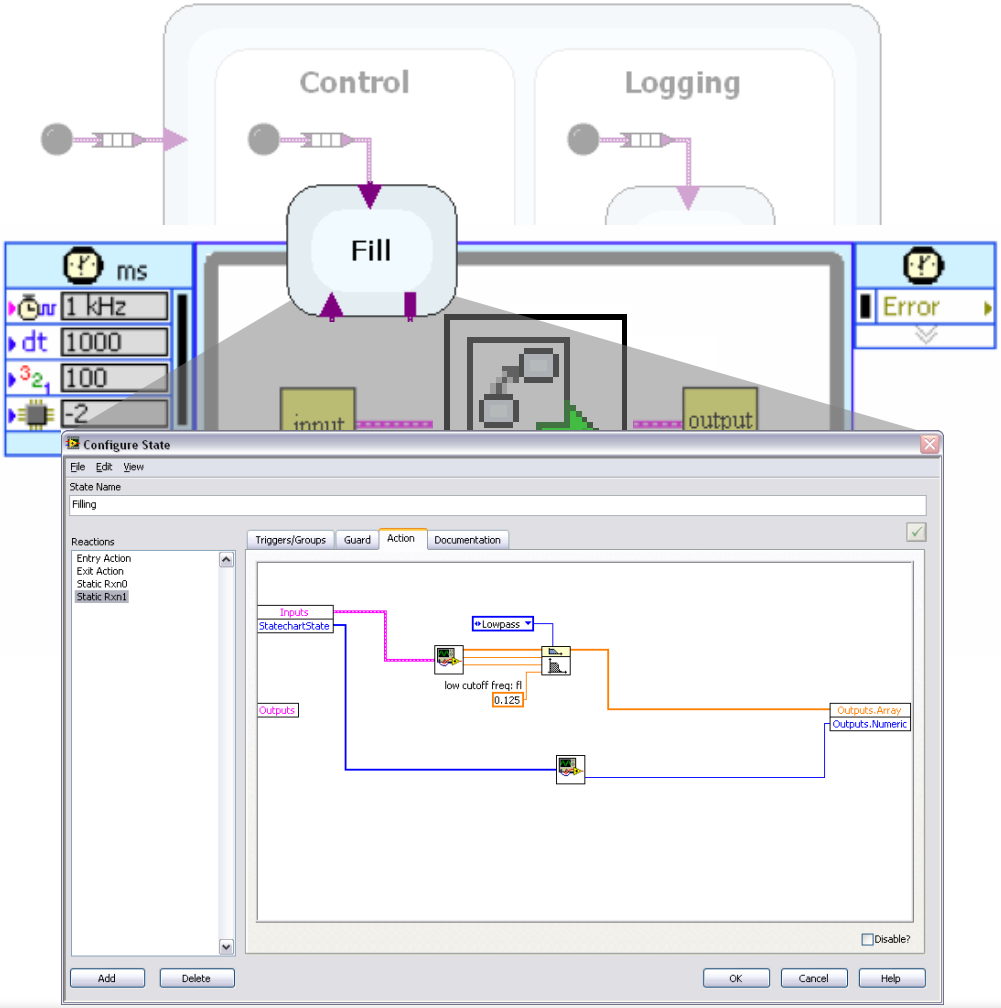

Example – Ceiling Fan

- Triggers
  - Power switch
  - Fan toggle
  - Light toggle
- Outputs
  - Light
  - Fan speed

Power		No Power	
Fan	Light	Fan	Light
High	on	off	
medium			
low	off		
off			

Example – Ceiling Fan

- Triggers
  - Power switch
  - Fan toggle
  - Light toggle
- Outputs
  - Light
  - Fan speed
- Internal Data
  - Fan Speed

Power		No Power	
Fan	Light	Fan	Light
on	on	off	
off	off		

1. Build Statechart

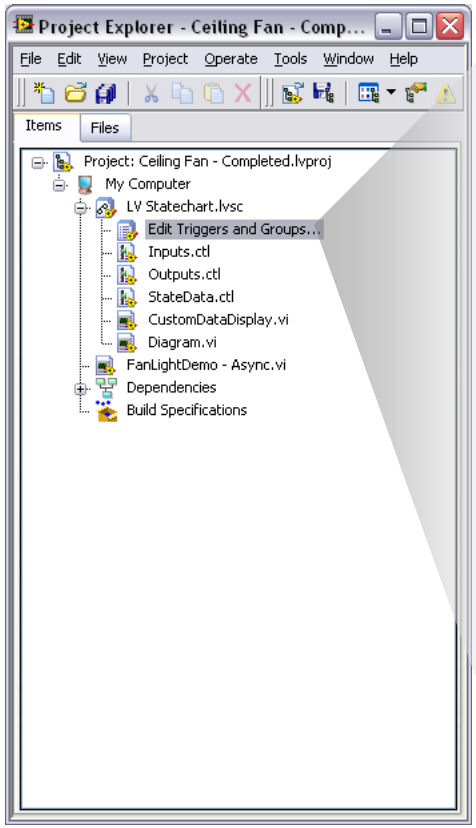

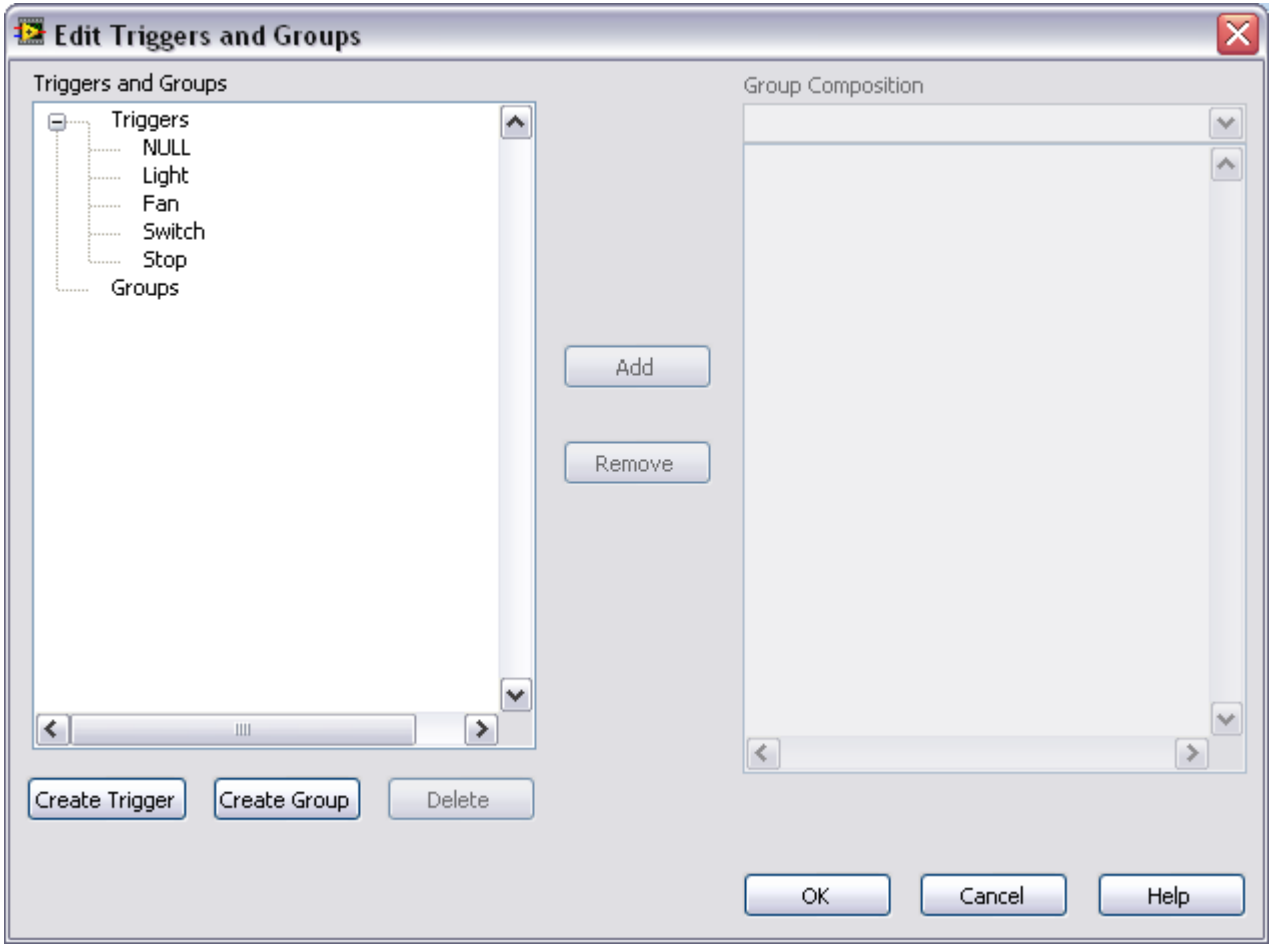

1. Build Statechart

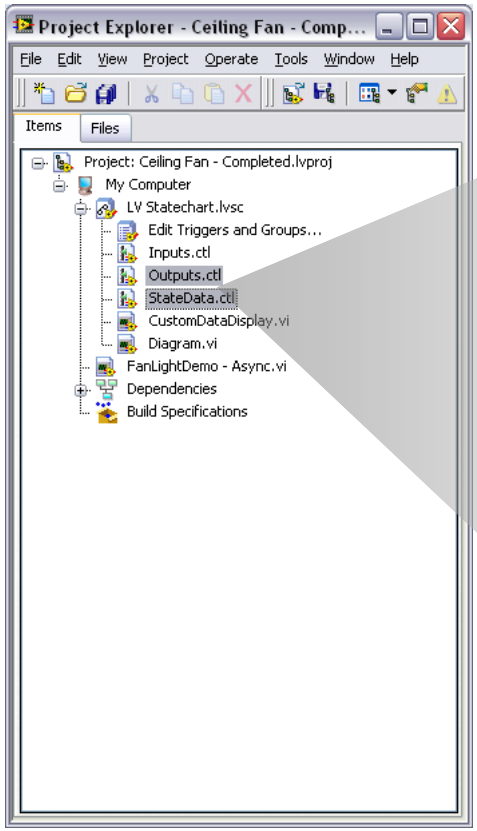

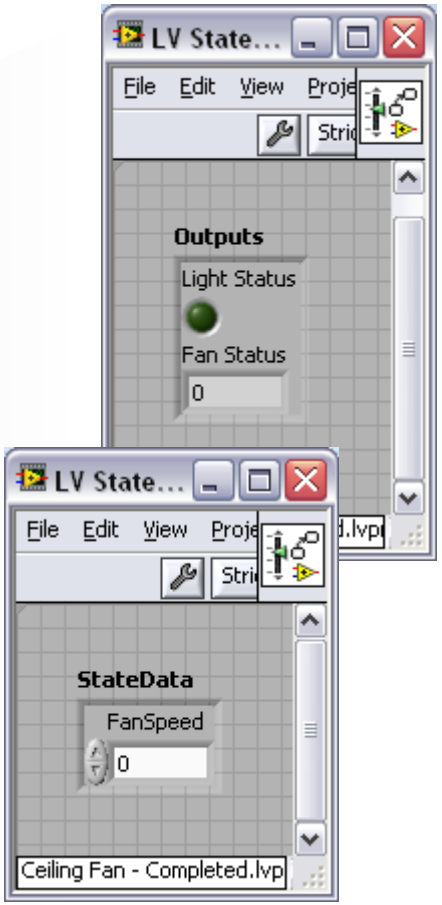

1. Build Statechart

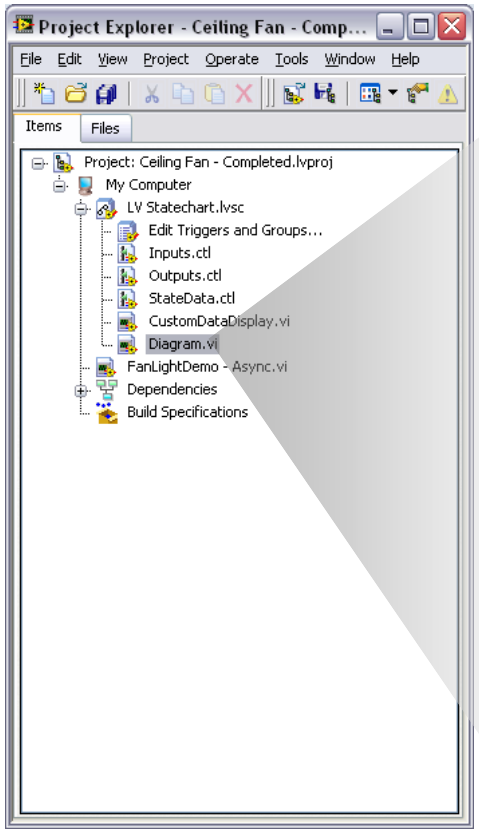

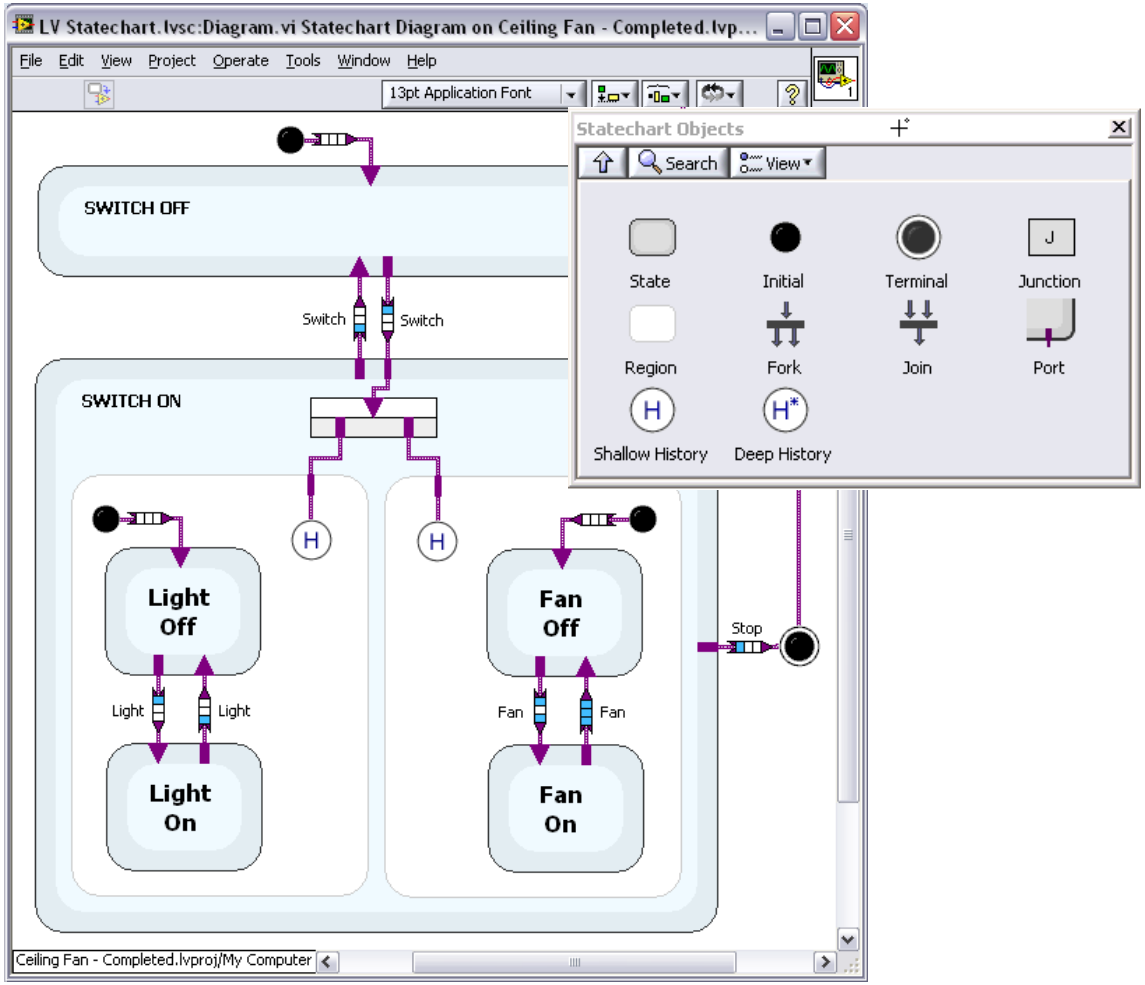

2. Define Transitions and States

- Each Transition contains three components
  - Trigger – events that cause a transition
  - Guard – logic that can prevent a transition
  - Action – what happens when you transition

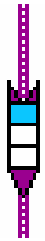

If the doorbell rings and an adult is home, answer the door.

```
Curr State - DOOR CLOSED
  Trigger  - doorbell ring
  Guard    - adult home?
  Action   - open door
New State  - DOOR OPEN
```

2. Define Transitions and States

- Each Transition contains three components
  - Trigger – events that cause a transition
  - Guard – logic that can prevent a transition
  - Action – what happens when you transition

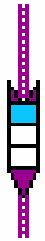

- Each state contains three types of actions
  - Entry – what happens when you get there
  - Exit – what happens when you leave
  - Static – what happens while you are there

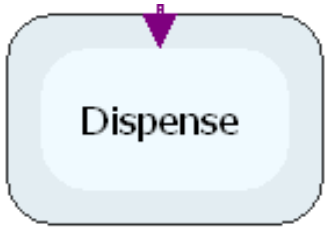

2. Define Transitions and States

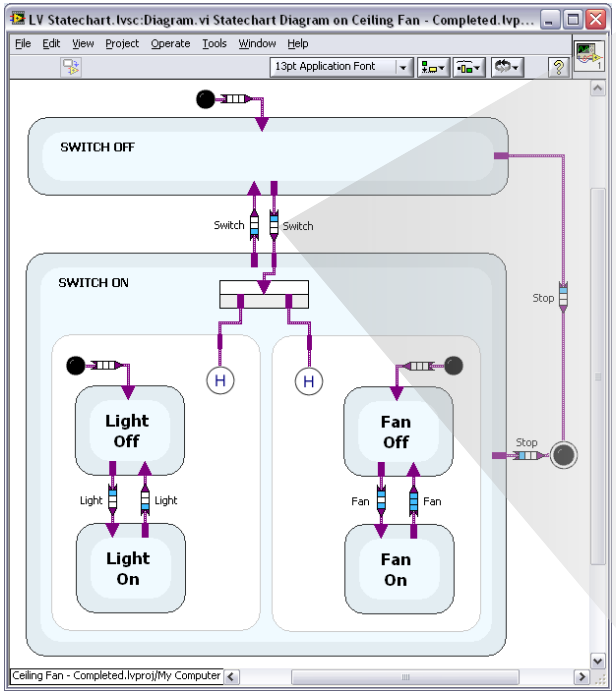

Trigger-Guard-Action

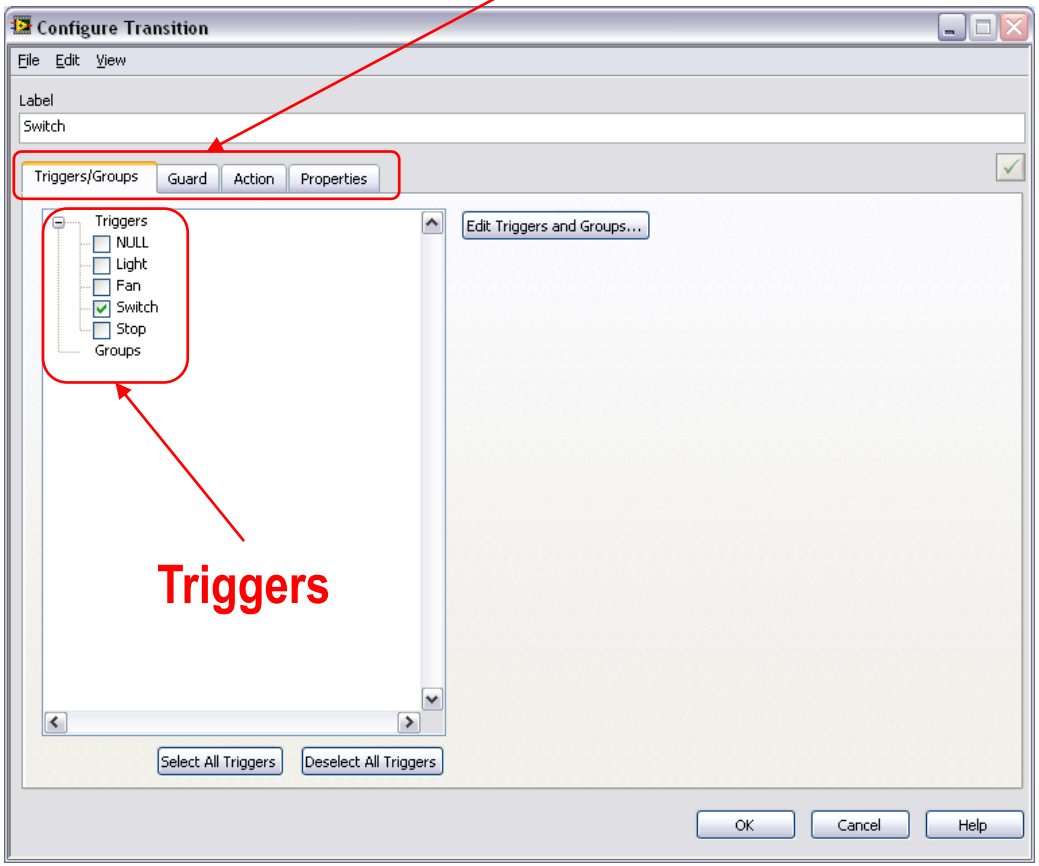

2. Define Transitions and States

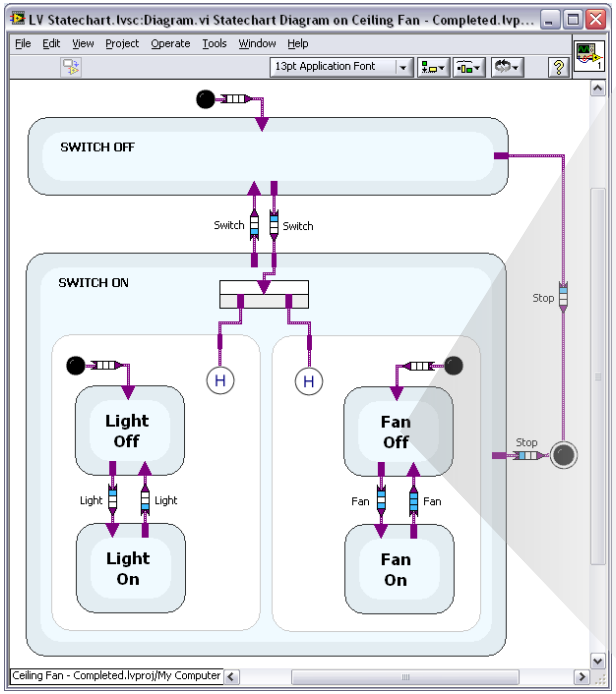

Static Reaction

Trigger-Guard-Action

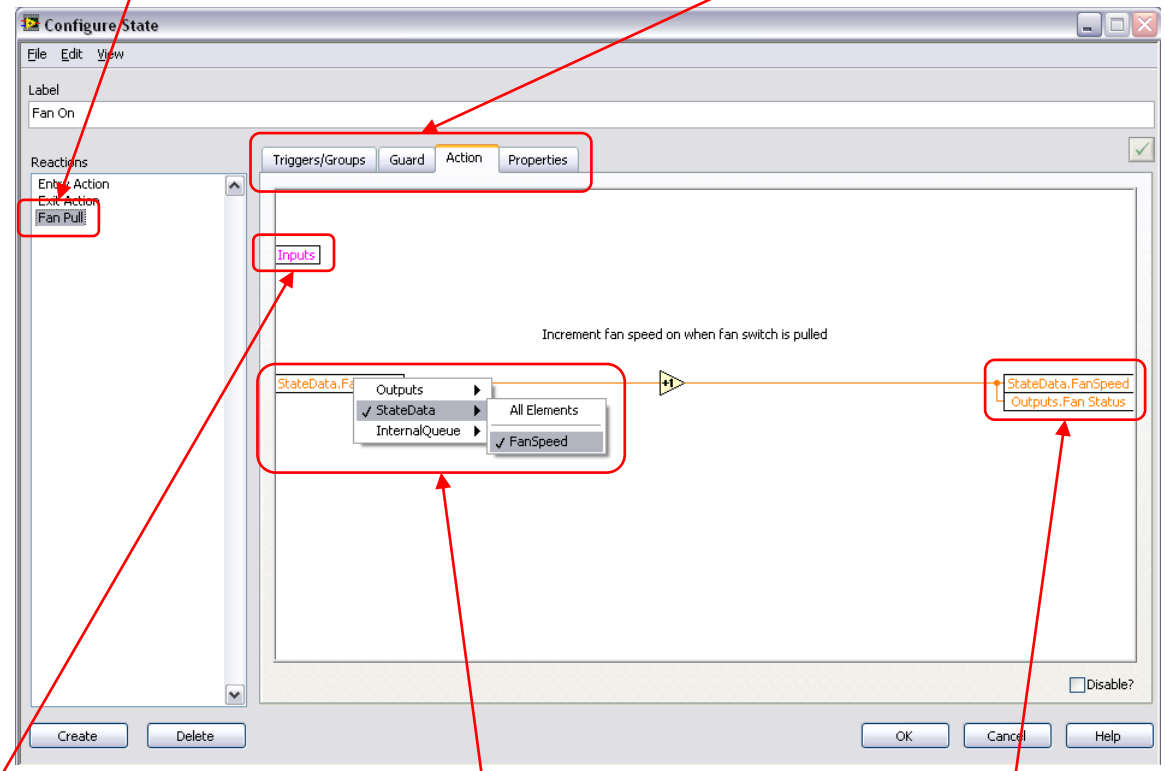

Inputs

State Data

Outputs

3. Build Statechart SubVI

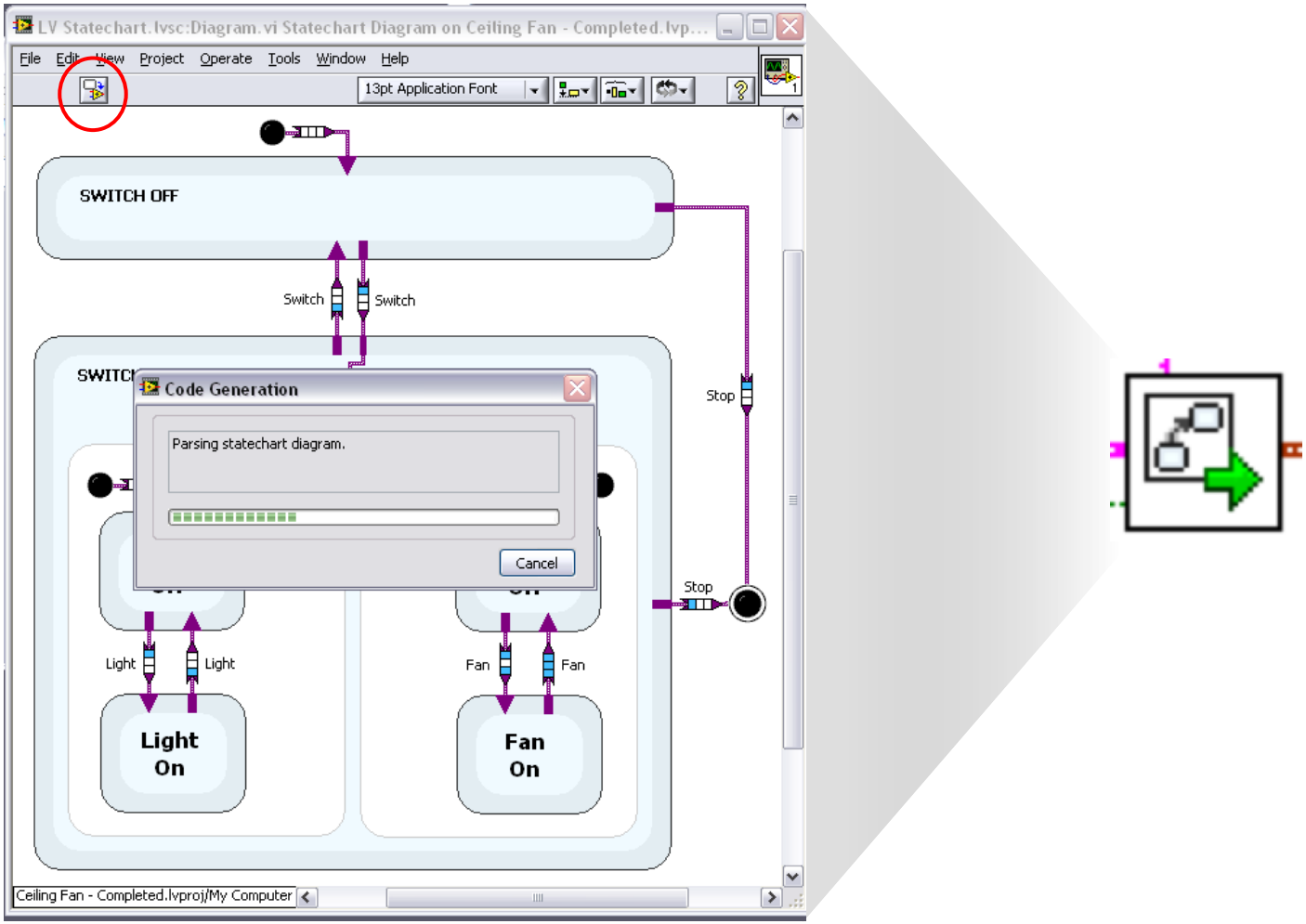

4. Place in LabVIEW Block Diagram

EVENT LOOP

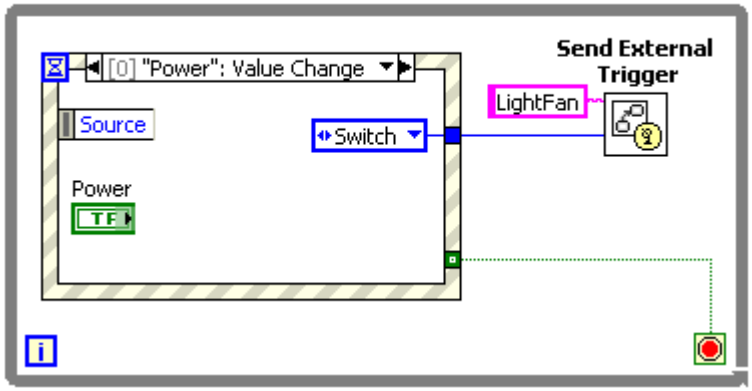

ASYNC STATECHART LOOP

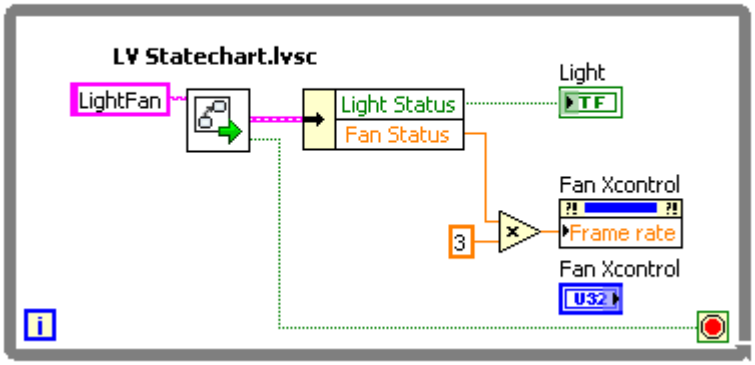

Asynchronous Usage

- User interface
- Interruption handling
- Modeling event driven systems

4. Place in LabVIEW Block Diagram

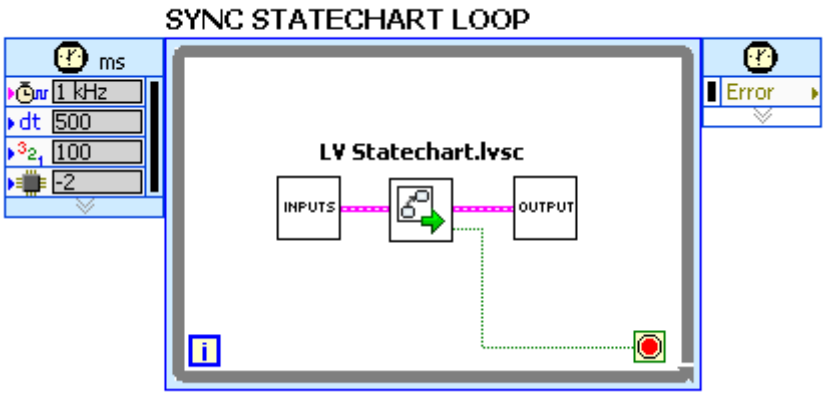

Synchronous Usage

- Embedded applications
- Communication protocols
- Control implementations

Statechart Execution

- Evaluate the trigger/guard logic for the transitions leaving the current state(s)
- On first valid transition:
  - Execute the exit action(s) for the current state(s)
  - Execute the transition action
  - Execute the entry action(s) for all state(s) being transitioned to
- If no transitions are valid:
  - Evaluate the trigger/guard logic for all static reactions configured for the current state
  - Execute the action code for all valid reactions

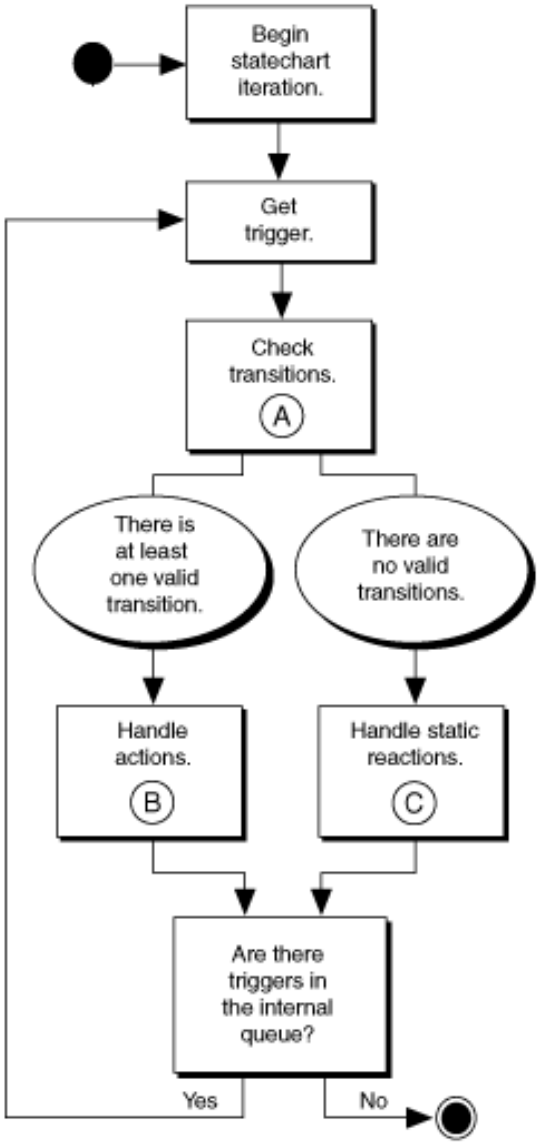

Statechart Execution

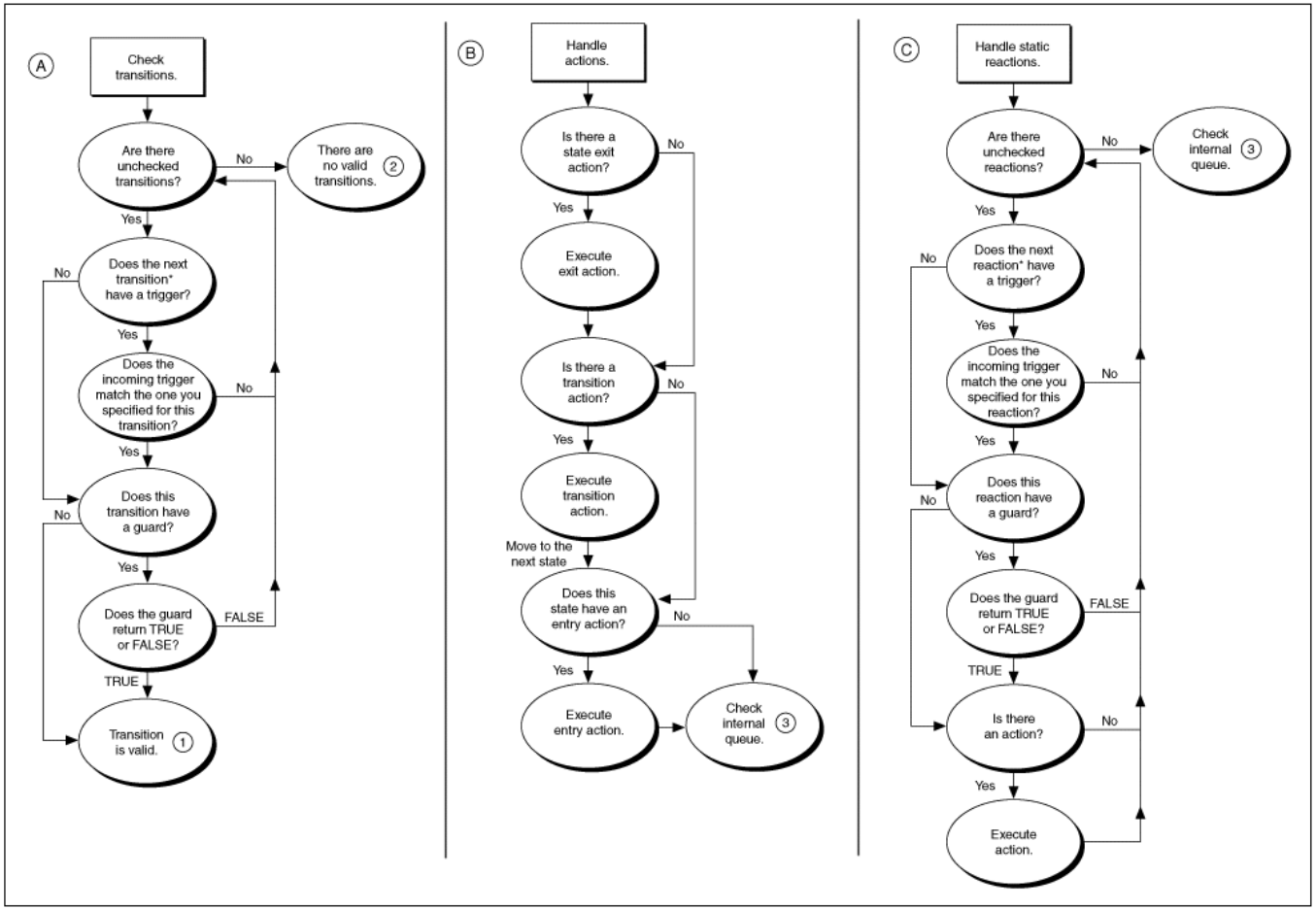

DEMO

What to do next?

- Visit ni.com/statechart
  - Demo videos
  - Statecharts 101 whitepaper
  - Statecharts with LabVIEW FPGA whitepaper
  - Try the LabVIEW Statechart Module online
- Demonstration from local Field Engineer