EE194-EE290C

28 nm SoC for IoT

Acknowledgement: Wayne Stark EE455 Lecture Notes, University of Michigan
David Wentzloff EE522 Lecture Notes, University of Michigan

Gaussian Filtering of a Rectangular Pulse

$$x(t) = P_T(t)$$

$$h(t) = \frac{1}{\sqrt{2\pi\sigma}} \exp\left\{-t^2 / (2\sigma^2)\right\}$$

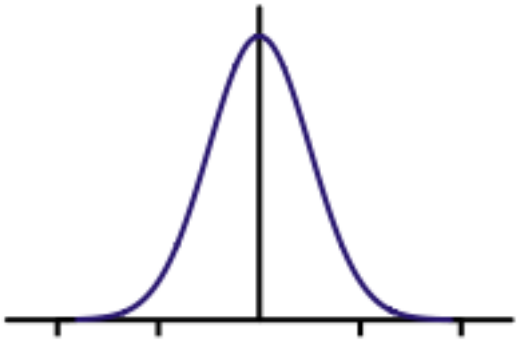

The parameter σ is related to the 3dB bandwidth **B** by

$$\sigma^2 = \frac{\ln(2)}{\pi^2 B} \qquad \beta = BT$$

This filter has the advantage of reducing sideband power, reducing interference with neighboring channels, at the cost of increasing intersymbol interference (ISI)

Gaussian Filtering of a Rectangular Pulse

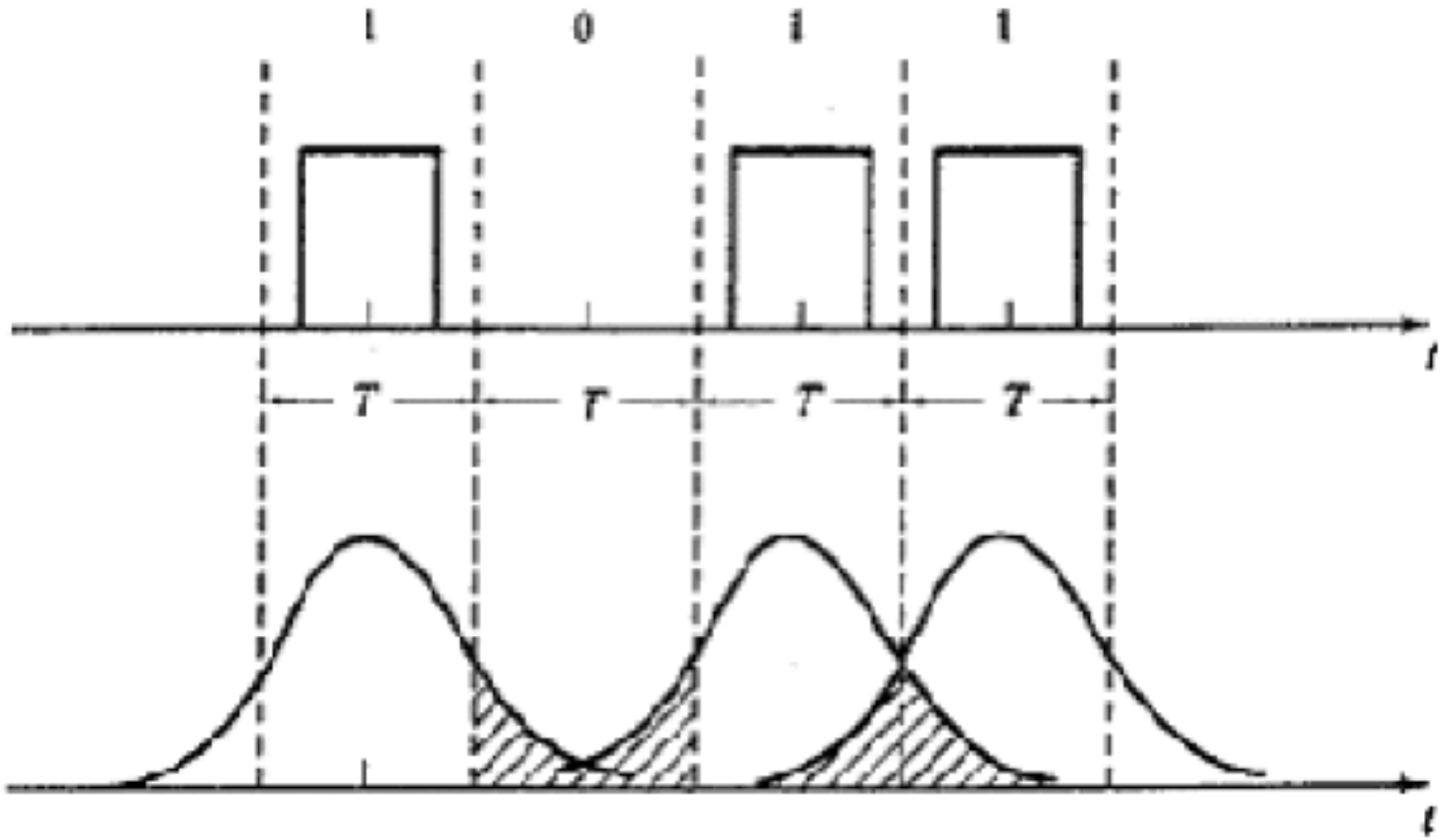

Fig 1: Inter Symbol Interference.

http://www.rroij.com/open-access/the-effects-of-inter-symbol-interference-isiand-fir-pulse-shaping-filters-a-survey.php?aid=43958

Gaussian Filtering of a Rectangular Pulse

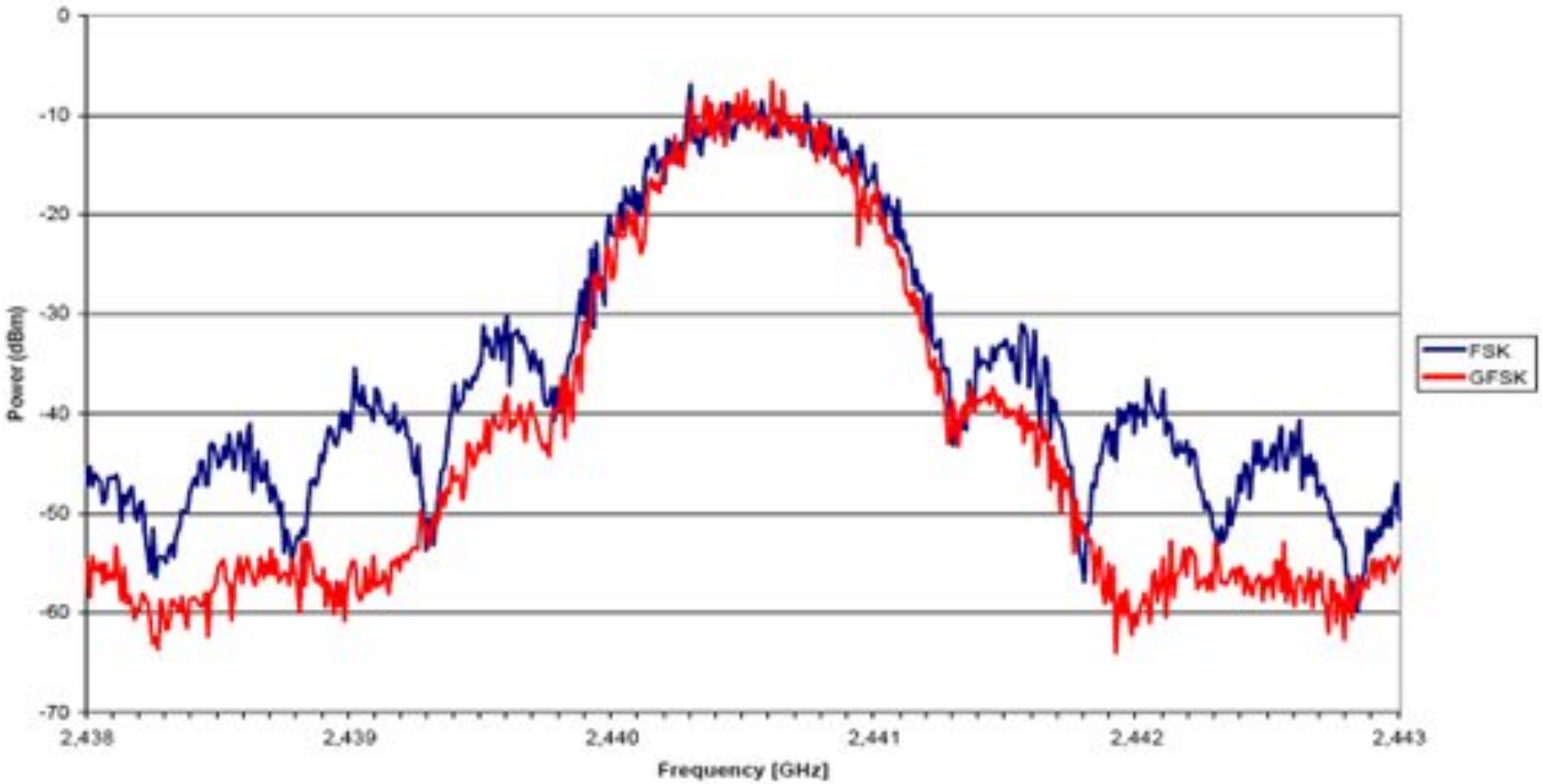

Noise

- Unwanted electric signals come from a variety of sources, both from
  - Naturally occurring noise (Atmospheric disturbances, extraterrestrial radiation, random electron motion)
  - Human interference. (Other communication systems, Lighting, ignition etc.)

- One unavoidable electrical noise is the thermal motion of electrons in conducting media
  - Modeled as white noise, a useful model in communication. (AWGN channel)

Thermal Noise

For all practical purposes, the mean square voltage spectral density of thermal noise is constant at:

$$G_v(f) = 2RkT \qquad \text{Units: } V^2/Hz$$

$$P_a = \frac{\left\langle \left[v_s(t)/2 \right]^2 \right\rangle}{R_s} = \frac{\left\langle v_s^2(t) \right\rangle}{4R_s}$$

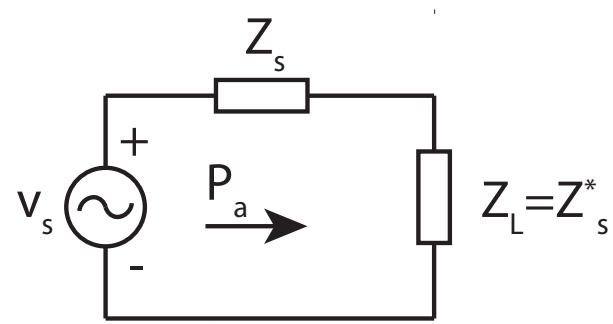

$$G_a(f) = \frac{G_v(f)}{4R} = \frac{kT}{2} = \frac{N_o}{2} \qquad \text{Units: W/Hz}$$

All frequency components in equal proportion and is therefore called **white noise**.

Noise Spectrum

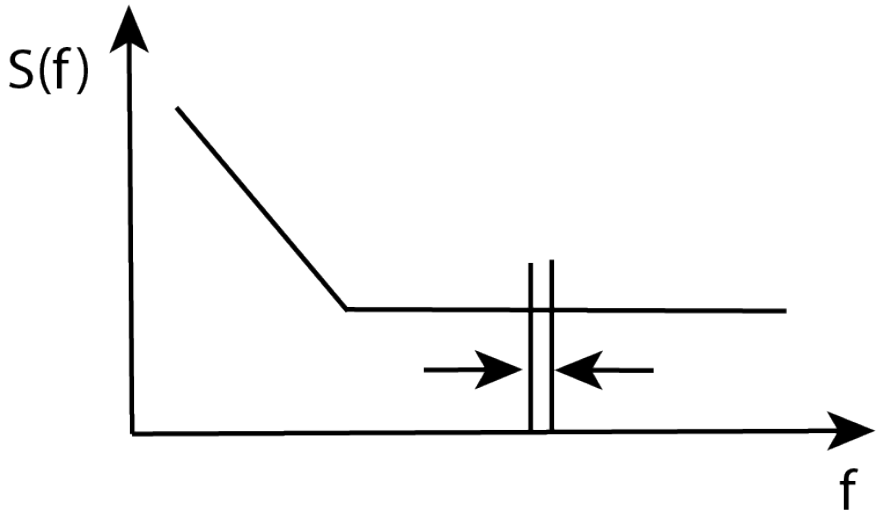

$$S_{th} = -174 dBm / Hz$$

Noise Bandwidth

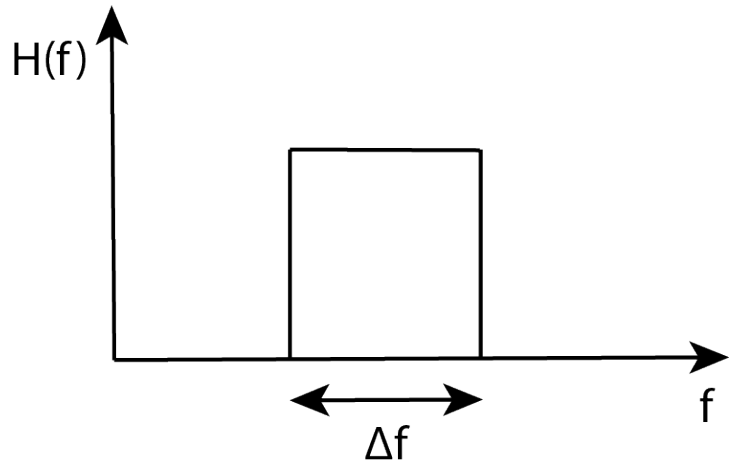

$$\Delta f = \frac{1}{\left|H(pk)\right|^2} \int_0^\infty \left|H(f)\right|^2 df$$

$$H(f) = \frac{1}{1 + j2\pi fRC} \qquad \Delta f = \frac{1}{4RC} = \frac{\pi}{2} f_{3dB}$$

Notes on Thermal Noise

- Noise Power depends on temperature and bandwidth

$$P_{NA} = kT\Delta f$$

  - Only ways to reduce thermal noise are cooling and filtering.

- To calculate total noise power, multiply by the noise bandwidth

$$\overline{e_n^2} = 4kTR\Delta f = \frac{kT}{C}$$

- Thermal noise only exists in real resistances

Noise Figure (NF)

Noise figure (NF) measure the degradation of Signal-to-Noise ratio (SNR) caused by components in a signal chain.

$$F = \frac{SNR_{in}}{SNR_{out}}$$ Units: Dimensionless

$$NF = 10\log_{10}\left(F\right) = 10\log_{10}\left(\frac{SNR_{in}}{SNR_{out}}\right) = SNR_{in,dB} - SNR_{out,dB}$$ Units: Dimensionless

It is a number by which the performance of a radio receiver can be specified.
Lower the better.