# Lecture #5

## OUTLINE

- Resistors in series
  - equivalent resistance
  - voltage-divider circuit
  - measuring current
- Resistors in parallel
  - equivalent resistance
  - current-divider circuit
  - measuring voltage
- Circuit w/ dependent source example

## Reading

Chapter 3.1-3.5



# Clarification of Terms

- **If $p > 0$, then the circuit element is *absorbing electric power* from the rest of the circuit.** (Power is delivered to the element.)
  - For a resistor, energy is ***dissipated*** in the form of heat
  - For a source, energy is stored
- **If $p < 0$, then the circuit element is *supplying electric power* to the rest of the circuit.**

  (The element is said to be ***developing power*** or ***generating power***; this power is delivered to the rest of the circuit.)

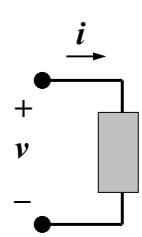

# Resistors in Series

Consider a circuit with multiple resistors connected in series. Find their "equivalent resistance".

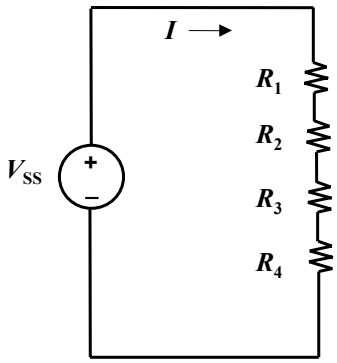


- KCL tells us that the same current (*I*) flows through every resistor
- KVL tells us

**Equivalent resistance of resistors in series is the sum**



# Voltage Divider

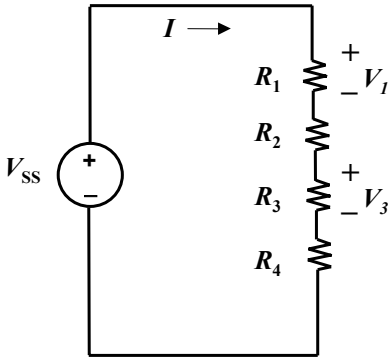


$$I = V_{SS} / (R_1 + R_2 + R_3 + R_4)$$

## When can the Voltage Divider Formula be Used?

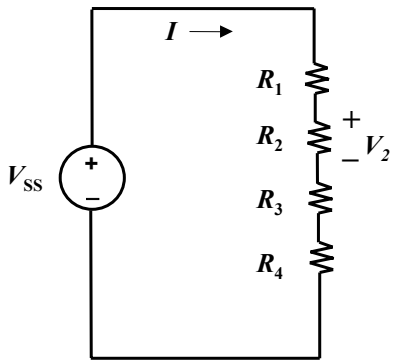


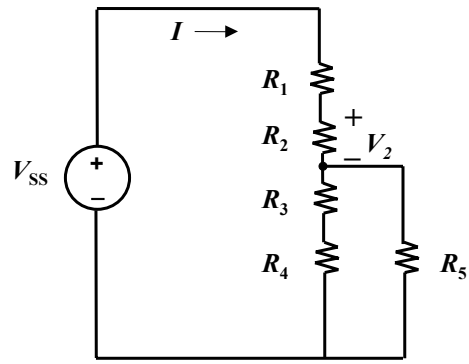


$$V_2 = \frac{R_2}{R_1+R_2+R_3+R_4} \cdot V_{SS}$$

Correct, if nothing else is connected to nodes

$$V_2 \neq \frac{R_2}{R_1+R_2+R_3+R_4} \cdot V_{SS}$$

because $R_5$ removes condition of resistors in series



## Measuring Current

To measure the current flowing through an element in a real circuit, insert an ammeter (digital multimeter in current mode) **in series** with the element.

Ammeters are characterized by their "ammeter input resistance" ($R_{in}$). Ideally, this should be very low (typical value 1Ω).

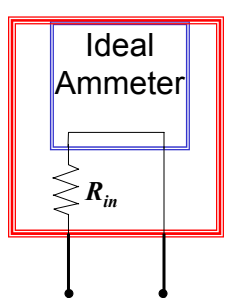

# Effect of Ammeter

Measurement error due to non-zero input resistance:

**undisturbed circuit**

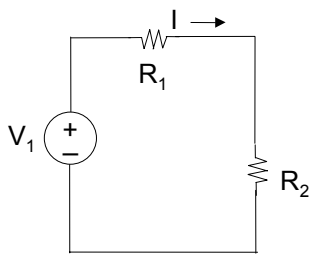


$$I = \frac{V_1}{R_1 + R_2}$$

**circuit with ammeter inserted**

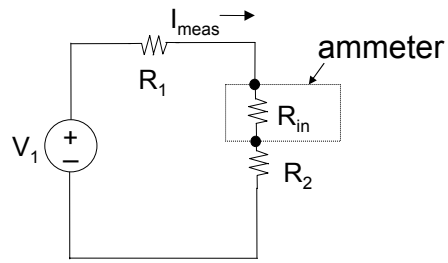


$$I_{meas} = \frac{V_1}{R_1 + R_2 + R_{in}}$$

Example: $V_1$ = 1 V, $R_1$= $R_2$ = 500 Ω, $R_{in}$ = 1Ω

$$I = \frac{1V}{500\Omega + 500\Omega} = 1mA, \quad I_{meas} = \frac{1V}{500\Omega + 500\Omega + 1\Omega} \cong 0.999\ mA$$



# Resistors in Parallel

Consider a circuit with two resistors connected in parallel. Find their "equivalent resistance".

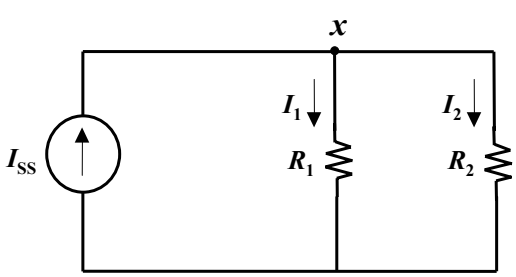


- KVL tells us that the same voltage is dropped across each resistor
  $V_x = I_1 R_1 = I_2 R_2$
- KCL tells us

# General Formula for Parallel Resistors

What single resistance $R_{eq}$ is equivalent to three resistors in parallel?

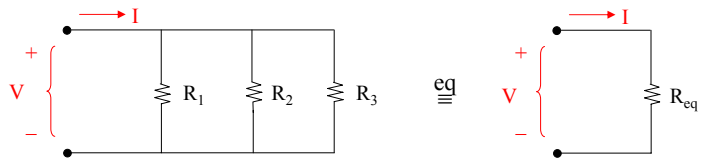


**Equivalent <u>conductance</u> of resistors in parallel is the sum**



# Current Divider

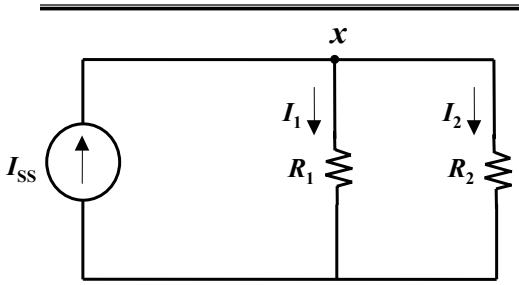


$$V_x = I_1 R_1 = I_{SS} R_{eq}$$

# Generalized Current Divider Formula

Consider a current divider circuit with >2 resistors in parallel:

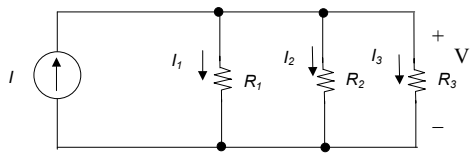


$$V = \frac{I}{\left(\frac{1}{R_1}\right) + \left(\frac{1}{R_2}\right) + \left(\frac{1}{R_3}\right)}$$

$$I_3 = \frac{V}{R_3} = I\left[\frac{1/R_3}{1/R_1 + 1/R_2 + 1/R_3}\right]$$



# Measuring Voltage

To measure the voltage drop across an element in a real circuit, insert a voltmeter (digital multimeter in voltage mode) **in parallel** with the element.

Voltmeters are characterized by their "voltmeter input resistance" ($R_{in}$). Ideally, this should be very high (typical value 10 MΩ)

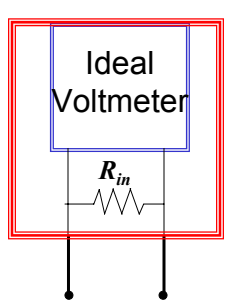

# Effect of Voltmeter

**undisturbed circuit**

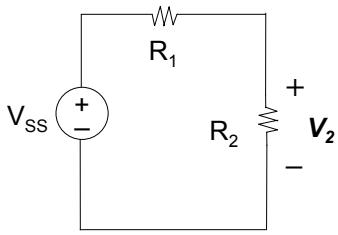


**circuit with voltmeter inserted**

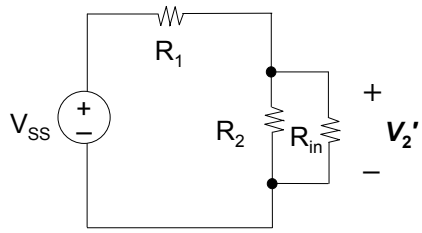


$$V_2 = V_{SS}\left[\frac{R_2}{R_1 + R_2}\right] \qquad V_2' = V_{SS}\left[\frac{R_2 \,||\, R_{in}}{R_2 \,||\, R_{in} + R_1}\right]$$

Example: $V_{SS} = 10\,\text{V}, R_2 = 100\,\text{K}, R_1 = 900\,\text{K} \Rightarrow V_2 = 1\text{V}$

If $R_{in} = 10\text{M}, V_2' = 0.991\text{V},$



# Circuit w/ Dependent Source Example

**Find $i_2$, $i_1$ and $i_o$**

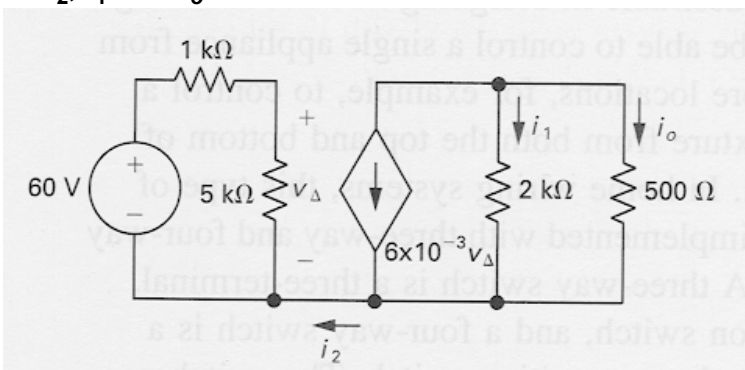

# Using Equivalent Resistances

Simplify a circuit before applying KCL and/or KVL:

Example: Find $I$

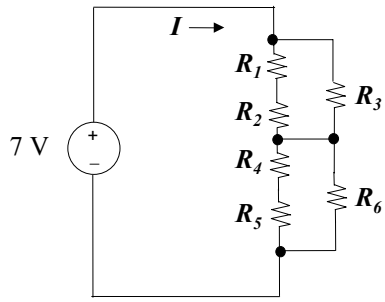


$R_1 = R_2 = 3\ \text{k}\Omega$
$R_3 = 6\ \text{k}\Omega$

$R_4 = R_5 = 5\ \text{k}\Omega$
$R_6 = 10\ \text{k}\Omega$



# Identifying Series and Parallel Combinations

Some circuits *must* be analyzed (not amenable to simple inspection)

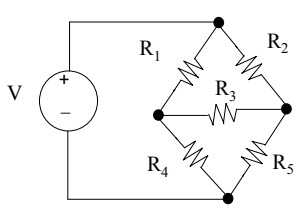


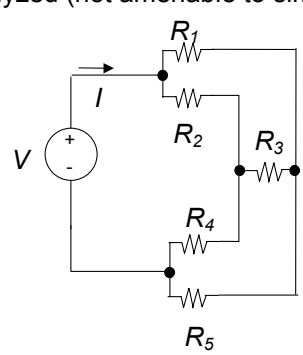


Special cases:
$R_3 = 0$ **OR** $R_3 = \infty$