Midterm 2
Review Solutions

Problem 1:

Invert V_a first, then use inverting-summing:

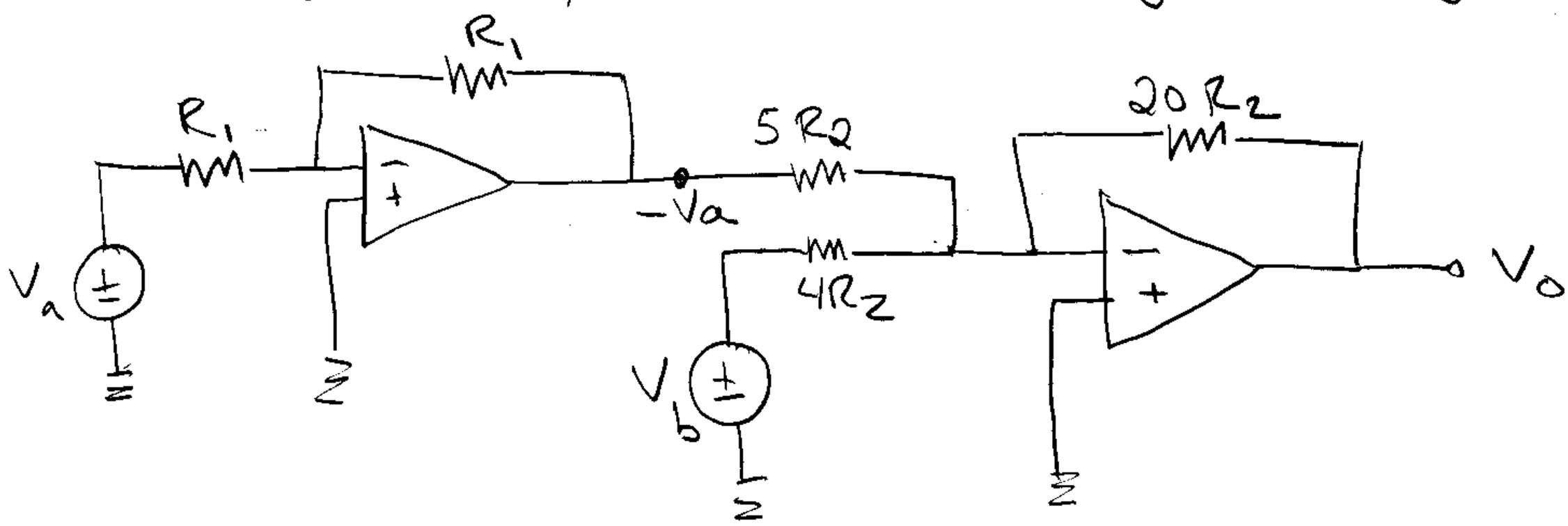

Or, do it all with one fancy amplifier:

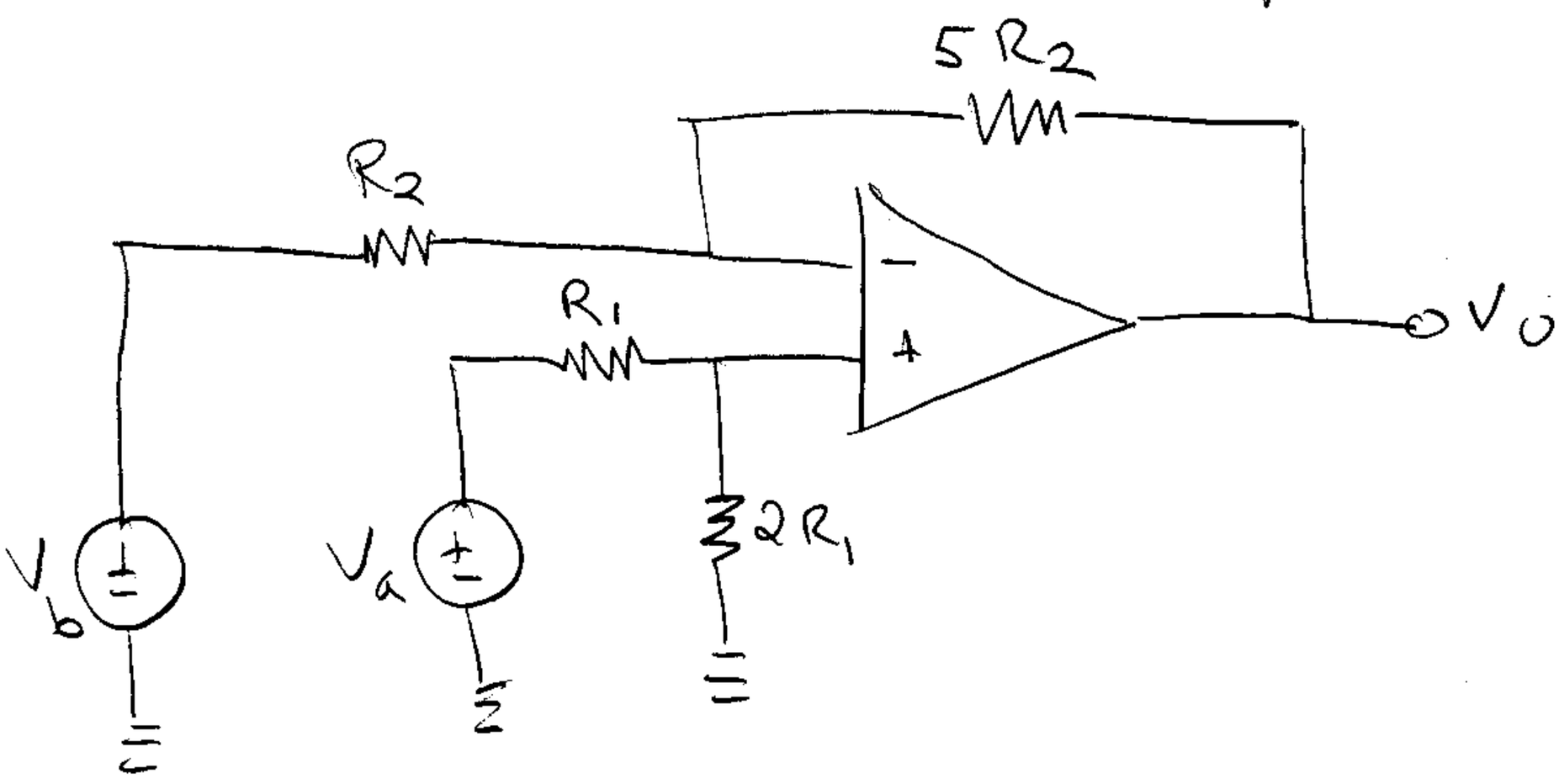

Here, R_1 & R_2 can be any positive value.

Problem 2:

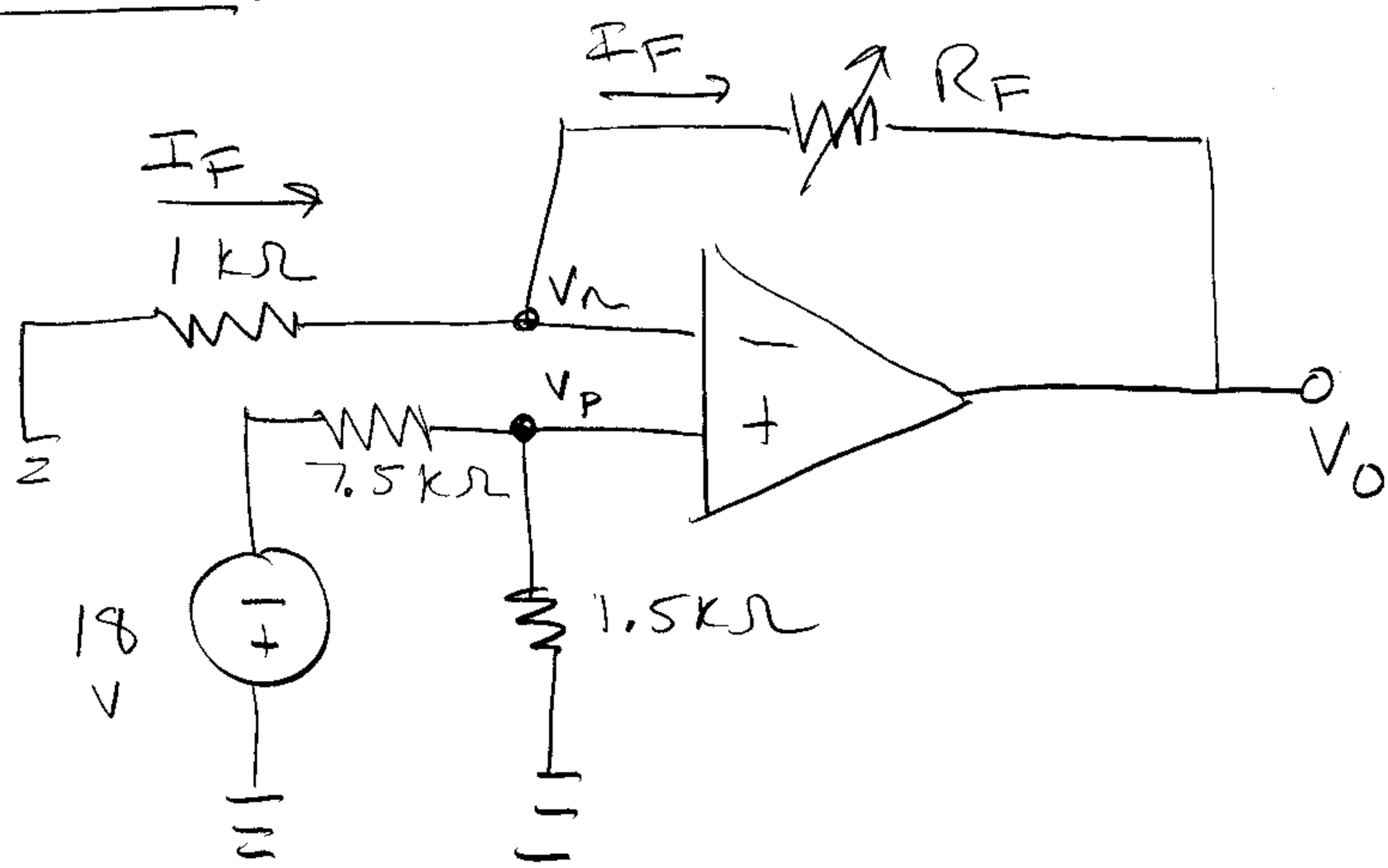

Since 7.5k + 1.5k resistors have same current, by voltage division,

$$V_p = -18 \cdot \frac{1.5k}{7.5k + 1.5k} = -3V$$

$$V_n = V_p = -3V$$

$$I_F = -\frac{V_n}{1k\Omega} = 3mA$$

$$-V_o - I_F R_F + V_n = 0$$

$$V_o = V_n - I_F R_F = -3V - 3mA\, R_F$$

So V_o is negative, cannot hit 18 V rail

$$-9 < V_o \Rightarrow -9 < -3 - 3\times10^{-3} R_F \Rightarrow R_F < 2k\Omega$$

Problem 3:

ideal model:

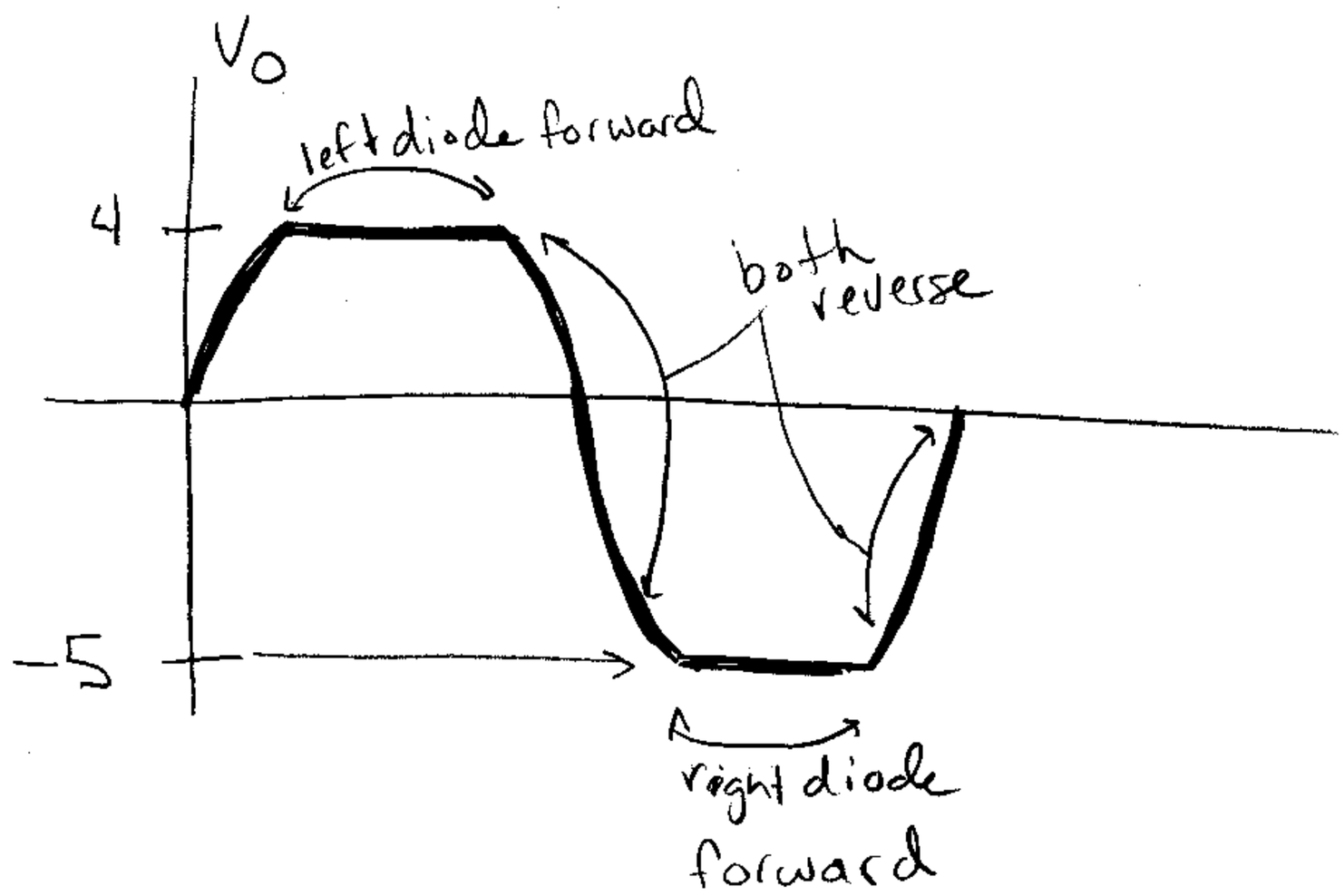

large-signal model:

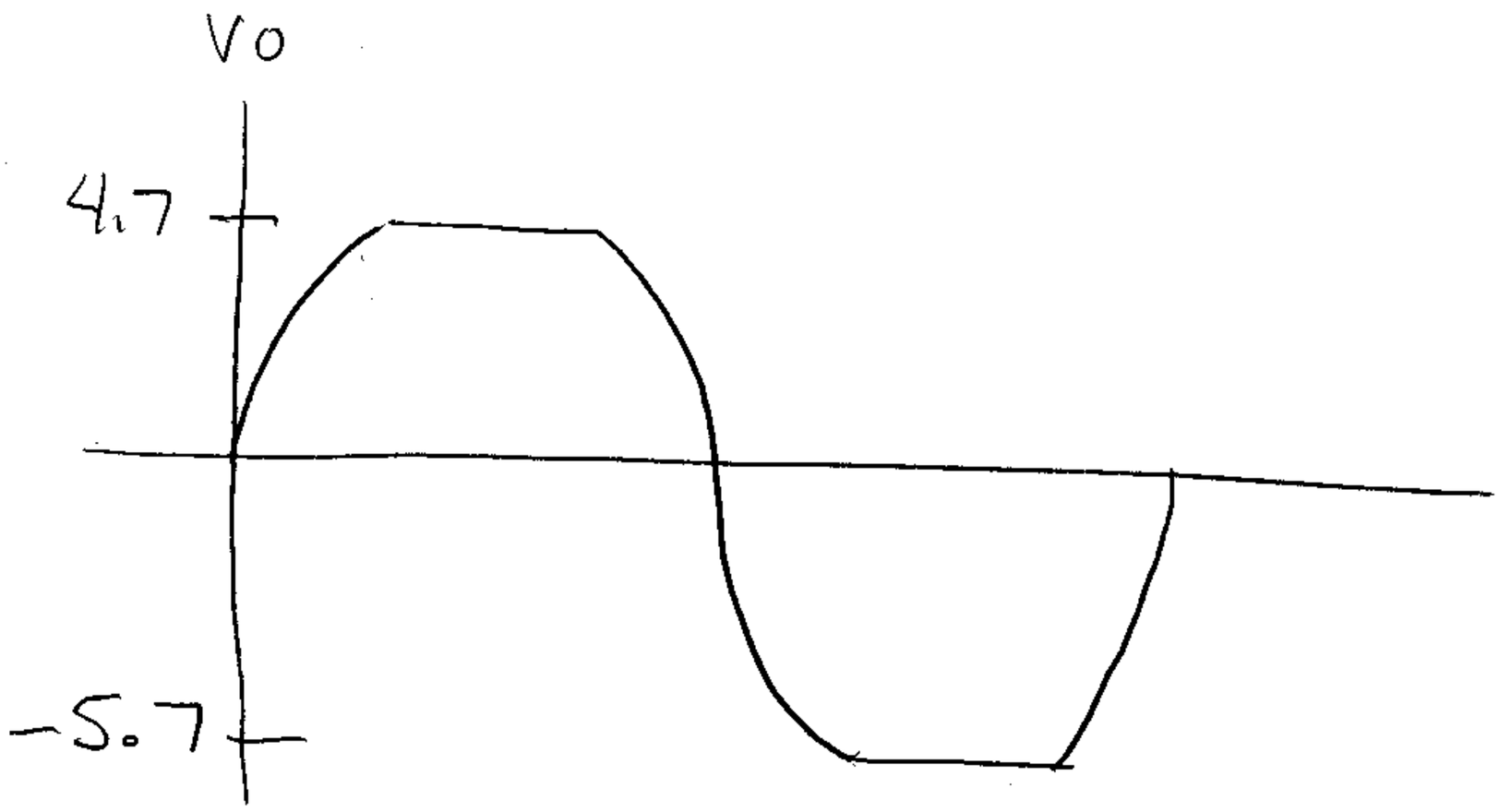

Small-signal model

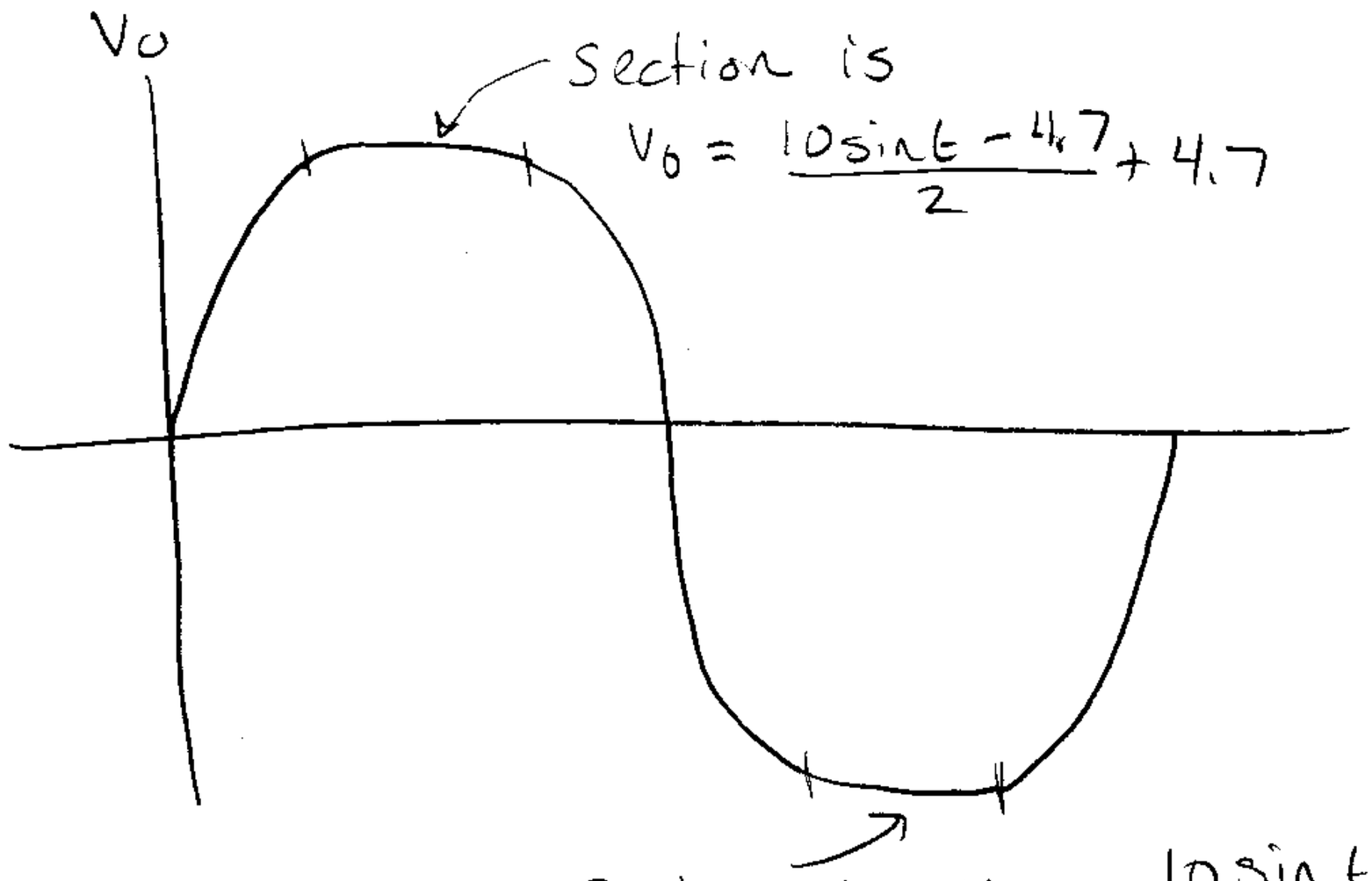

Problem 4:

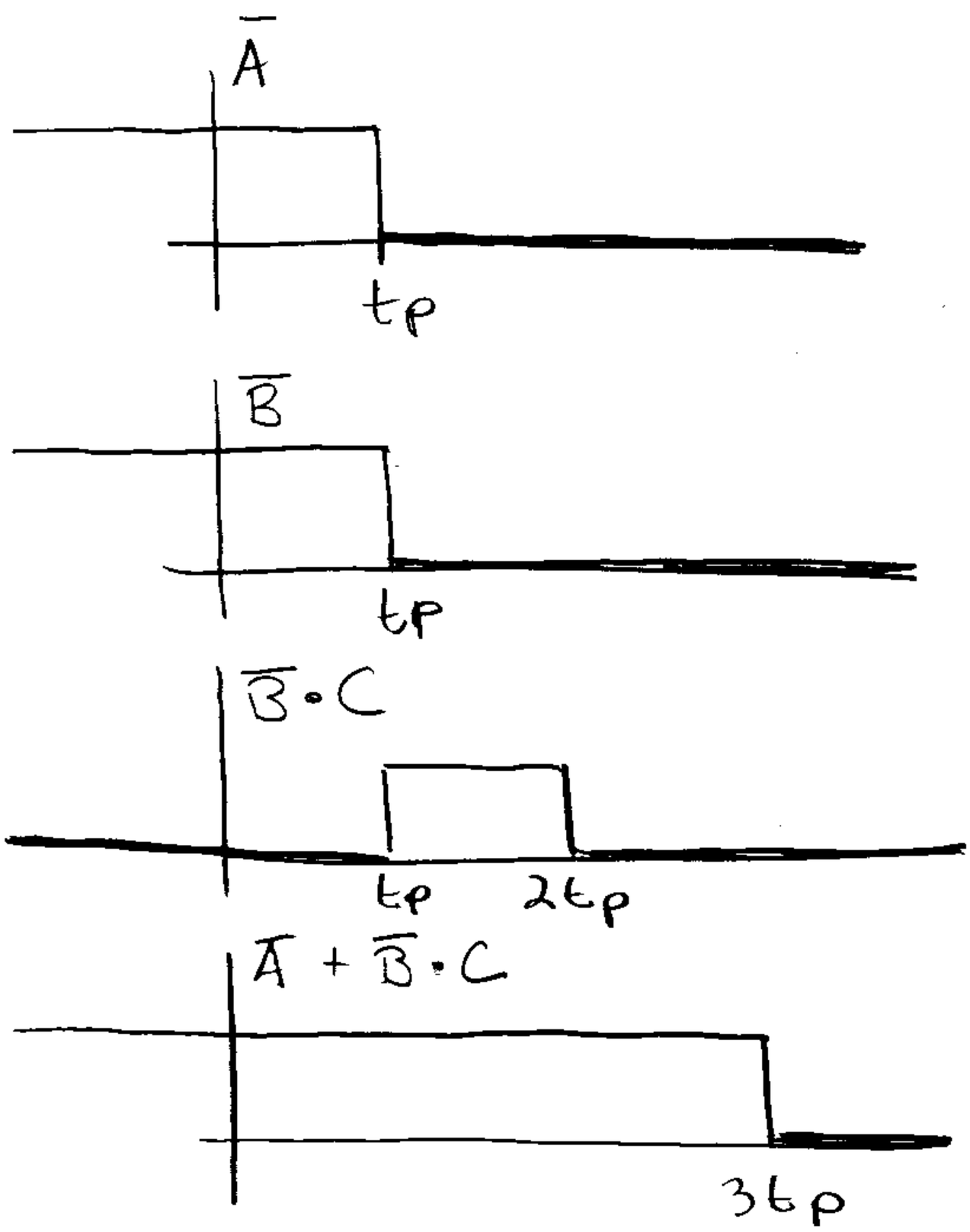

Problem 5:

$F = \bar{A}\bar{B}C + \bar{A}BC + A\bar{B}C + ABC$

A \ BC	00	01	11	10
0	0	1	1	0
1	0	1	1	0

circle corresponds to

$F = C$

Problem 6:

$V_o = A(V_p - V_n)$ as long as V_o within rails

$V_o = 10^5(V_{in} - 2)$ if $0 \leq V_o \leq 5\ V$

$0 \leq 10^5(V_{in} - 2) \leq 5 \iff$

$0 \leq V_{in} - 2 \leq 5 \cdot 10^{-5} \iff$

$2 \leq V_{in} \leq 2 + 5 \cdot 10^{-5}$