EE40 Midterm 2 Solutions

August 11, 2008

Problem 1

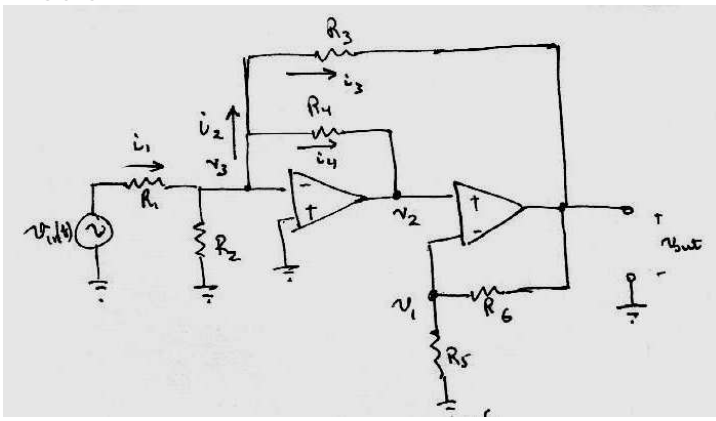

Both amplifiers clearly have negative feedback, so we can use the summing point constraint (spc) in analysis of either op-amp. From the spc we know that $v_1 = v_2$ and $v_3 = 0$. Then we know that there is no current flowing through R_2 since the voltage drop across it is $v_3 - 0 = 0$. Therefore, $i_1 = \frac{v_{in}}{R_1} = i_2$. From KCL we know that $i_2 = i_3 + i_4$ Using KVL from the inverting input at the first stage of the amplifier, we find that $i_4 R_4 + v_2 = 0$ and $i_3 R_3 + v_{out} = 0$. Solving for the currents we find that

$$i_4 = -\frac{v_2}{R_4}$$
$$i_3 = -\frac{v_{out}}{R_3}$$

Substituting into the KCL equation, we get

$$i_2 = \frac{v_{in}}{R} = i_3 + i_4 = -\frac{v_2}{R_4} - \frac{v_{out}}{R_3}$$

From the voltage divider principle,

$$
\begin{aligned}
v_2 = v_1 &= \frac{R_5}{R_5 + R_6} v_{out} \\
\frac{v_{in}}{R_1} &= -\frac{v_2}{R_4} - \frac{v_{out}}{R_3} \\
\frac{v_{in}}{R_1} &= -\frac{1}{R_4} \frac{R_5}{R_5 + R_6} v_{out} - \frac{v_{out}}{R_3} \\
\frac{v_{in}}{R_1} &= v_{out} \left[-\frac{1}{R_4} \frac{R_5}{R_5 + R_6} - \frac{1}{R_3} \right] \\
\Rightarrow \frac{v_{out}}{v_{in}} &= \frac{1}{R_1 \left[-\frac{1}{R_4} \frac{R_5}{R_5 + R_6} - \frac{1}{R_3} \right]} \\
&= -\frac{R_4 (R_5 + R_6) R_3}{R_1 (R_3 R_5 + R_4 (R_5 + R_6)}
\end{aligned}
$$

Problem 2

Negative feedback is present in the system so the summing point constraint applies. By the SPC, no current flows into the non-inverting input of the opamp, so R_4 is inactive. The voltage at the inverting input is 0V, so no current flows through elements L, C, R_2 as there is no voltage drop across the terminals of these elements. The simplified circuit is of the form

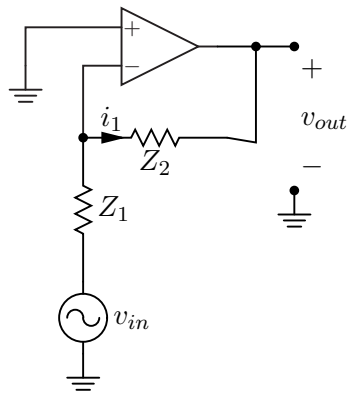

where $Z_1 = R_1 + \frac{1}{j\omega C}$ and $Z_2 = Z_{R_3}//Z_C = \frac{R_3}{1+j\omega CR_3}$

$$
\begin{aligned}
H(j\omega) &= -\frac{Z_2}{Z_1} \\
&= -\frac{R_3}{1+j\omega CR_3} \cdot \frac{1}{R_1 + \frac{1}{j\omega C}} \\
&= -\frac{R_3}{1+j\omega CR_3} \cdot \frac{j\omega C}{j\omega R_1 C + 1} \\
&= -\frac{j\omega R_3 C}{(1+j\omega CR_3)(1+j\omega R_1 C)} \\
|H(j\omega)| &= \frac{R_3 C}{\sqrt{(1+(\omega CR_3)^2)(1+(\omega R_1 C)^2)}} \\
|H(j\omega)|_{dB} &= 20log_{10}|H(j\omega)| \\
&= 20log_{10}(R_3 C) - 10log_{10}[1+(\omega R_1 C)^2] - 10log_{10}[1+(\omega R_3 C)^2)] \\
\angle H(j\omega) &= -\angle[j\omega R_3 C] - \angle[1+j\omega CR_3] - \angle[1+j\omega R_1 C] \\
&= -\frac{\pi}{2} - tan^{-1}(\omega CR_3) - tan^{-1}(\omega CR_1)
\end{aligned}
$$

In the problem statement we are told that $R_3 >> R_2 >> R_1$, which in terms of the Bode approximation means that $R_3 \approx 100R_1$. The approximate Bode plots are given by

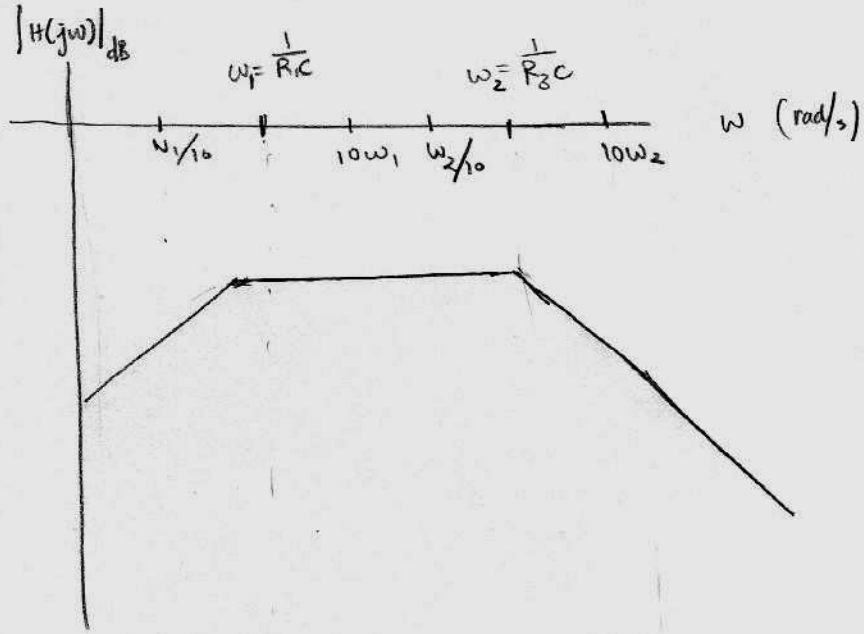
|H(jω)|dB
ω1 = 1/R1C
ω2 = 1/R3C
ω1/10
10ω1
ω2/10
10ω2
ω (rad/s)

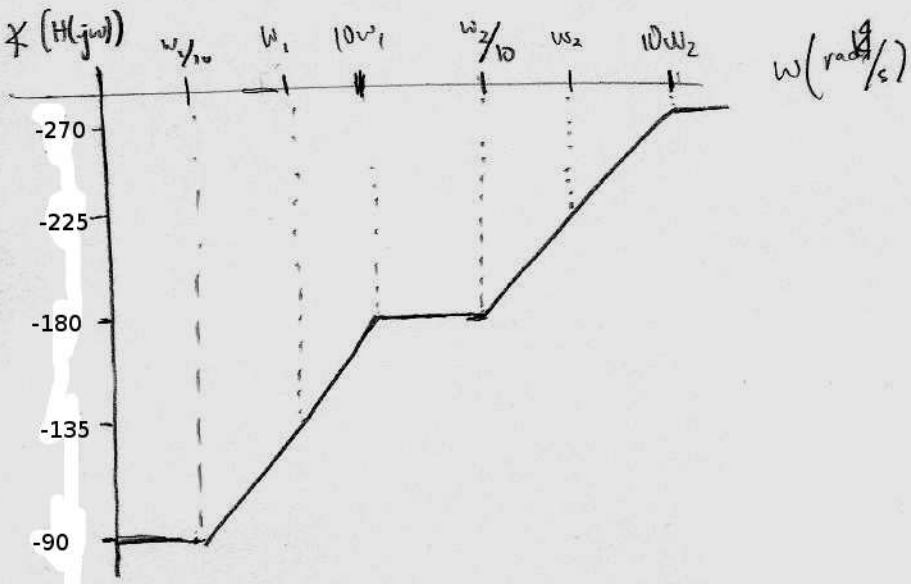
∠(H(jω))
ω1/10
ω1
10ω1
ω2/10
ω2
10ω2
ω(rad/s)
-270
-225
-180
-135
-90

Note that the exact decibel values on the vertical axis of the magnitude plot are dependent on R_1, R_3 and are therefore omitted. The slope of the magnitude plot is 20dB/decade where it is non-zero.

Problem 3

Zeroing out the current source (replacing it with an open circuit, we find that the Thevenin resistance is

$$\begin{aligned} R_{th} &= R + j\omega L - \frac{j}{\omega C} \\ &= 10 + j\left(5 * 10^{-3} * 10^{3} - \frac{1}{200 * 10^{-6} * 10^{3}}\right) \\ &= 10 + j\,(5 - 5) \\ &= 10\Omega \end{aligned}$$

The current through the source as a cosine function is $I = 2cos(1000t + \frac{\pi}{2} - \frac{\pi}{2}) = 2cos(1000t)$ The Thevenin voltage is the voltage drop across the impedance of the resistor and the impedance of the inductor:

$$\begin{aligned} V_{th} &= (Z_R + Z_L) \cdot (-I) \\ &= (10 + j5) \cdot (-I) \\ &= \sqrt{10^2 + 5^2} e^{jtan^{-1}(0.5)} \cdot (-I) \\ &= -2\sqrt{10^2 + 5^2} cos(1000t + tan^{-1}(0.5)) \end{aligned}$$

$I_N = \frac{V_{th}}{R_{th}} = -\frac{2\sqrt{10^2+5^2}}{10} cos(1000t + tan^{-1}(0.5))$ The short-circuit current i_{sc} flowing from terminal a to terminal b is $i_{sc} = -I = -2cos(1000t)$. Therefore, the Thevenin equivalent is

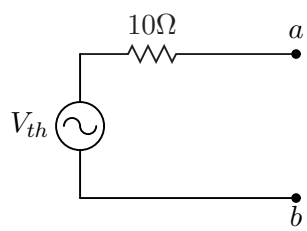

And the Norton equivalent is

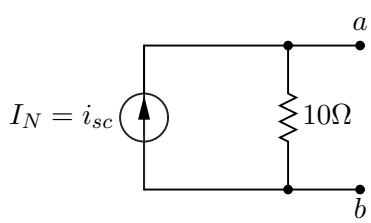

Problem 4

Assume that D_1 is conducting and D_2 is not. Since we are assuming ideal diode behavior, this means that D_2 is replaced with an open circuit and D_1 is replaced with a short circuit, as shown below:

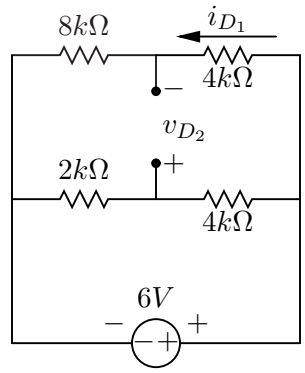

This assumption is correct if it can be shown that $v_{D_2} < 0$ and $i_{D_1} > 0$. $i_{D_1} = \frac{6V}{12K\Omega} = 0.5mA$. Using the voltage divider principle, $v_{D_2} = \frac{2k\Omega}{2k\Omega+4k\Omega} \cdot 6V - \frac{8k\Omega}{8k\Omega+4k\Omega} \cdot 6V = -2V$. Therefore, the assumptions are consistent. The power dissipated through the $8k\Omega$ resistor is given by $i_{D_1}^2 \cdot 8k\Omega = (0.5mA)^2 \cdot 8k\Omega = 2mW$

Many people made the error that the configuration of the circuit should be with both diodes conducting:

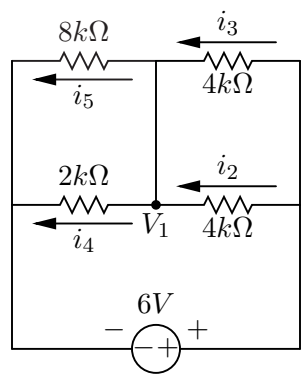

Combining resistances in parallel and series we get that the total current flowing out of the $6V$ source is equal to $i_1 = \frac{5}{3}mA$. Since i_2 and i_3 travel through the same resistance to the same voltage, the current must be split evenly, so $i_2 = i_2 = \frac{1}{2}i_1 = \frac{5}{6}mA$. $V_1 = \frac{1.6k\Omega}{1.6k\Omega+2k\Omega}6V = \frac{8}{3}V$. Then $i_4 = \frac{V_1}{2k\Omega} = \frac{4}{3}mA$ and $i_5 = \frac{V_1}{8k\Omega} = \frac{1}{3}mA$. This indicates that $i_{D_1} = i_4 - i_2 = 0.5mA$ flowing downwards, which contradicts the assumption that the diode is forward biased.

Problem 5

The opamp circuit is of the form of the standard inverting amplifier

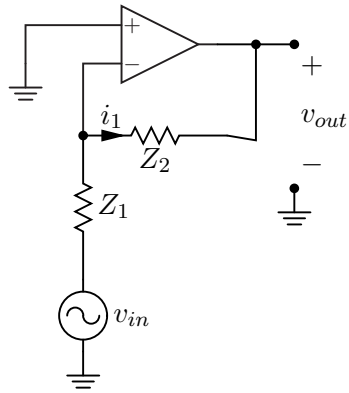

where $Z_1 = R_2$ and $Z_2 = \frac{1}{j\omega C}//R_1 = \frac{R_1}{1+j\omega R_1 C_1}$. Then the transfer function is given by

$$
\begin{aligned}
H(j\omega) &= \frac{v_{out}}{v_{in}} \\
&= -\frac{Z_2}{Z_1} \\
&= -\frac{1}{R_2} \cdot \frac{R_1}{1 + j\omega R_1 C_1} \\
|H(j\omega)|_{dB} &= 20log_{10}\left(\frac{R_1/R_2}{\sqrt{1+(\omega R_1 C_1)^2}}\right) \\
&= 20log_{10}\left(\frac{R_1}{R_2}\right) - 10log_{10}[1 + (\omega R_1 C_1)^2] \\
|H(j0)|_{dB} &= 20 = 20log_{10}\left(\frac{R_1}{R_2}\right) \\
\Rightarrow R_2 &= \frac{R_1}{10} \\
|H(j\omega_x)|_{dB} &= 20log_{10}\left(\frac{R_1}{R_2}\right) - 10log_{10}[1 + (\omega_x R_1 C_1)^2] \\
-40 &= 20 - 10log_{10}[1 + (\omega_x R_1 C_1)^2] \\
-60 &= -10log_{10}[1 + (\omega_x R_1 C_1)^2] \\
10^6 &= 1 + (\omega_x R_1 C_1)^2 \\
\Rightarrow C_1 &= \frac{\sqrt{(10^6 - 1)}}{R_1 \omega_x} \approx \frac{1000}{R_1 \omega_x}
\end{aligned}
$$