University of California, Berkeley — *Fall 2007*
EECS 142 — *Prof. A. Niknejad*
NEEI 6361 — *GSI Wei-Hung Chen*

Problem Set 10
Due Wednesday December 5, 2007

1. A differential negative-resistance VCO is shown below. The inductors have an inductance of 3nH and series resistance of 10Ω. Assume the bulks of the transistors are tied to their sources and the drain. Source diffusions are each $30\mu m^2$. (This is basically the same design as last week)

   (a) Assume Ibias =2mA, what is the approximate amplityde of oscillation when V_c=0V. What is its frequency? Confirm with transient simulation.

   (b) What is the approximate tuning range of the oscillator assuming $V_c > 0$ (what is the maximum V_c that will keep the varactor diodes from turning on)? What is the range in K_v? ($K_v = \frac{dfrequency}{dV_c}$. Confirm the maximum frequency with transient simulation.

   (c) Using Leeson's derivation, what is the phase noise of the oscillator? Compare with a Pnoise simulation... looking at the noise summary, what is missing from your estimate?

   (d) What is the effect of noise injection on V_c? Specifically, if a 1mV, 1MHz sinewave is injected at V_c, what power will you see at 1MHz offset? Check with PAC simulation. Predict the effect of putting a 1kΩ resistor in series with V_c

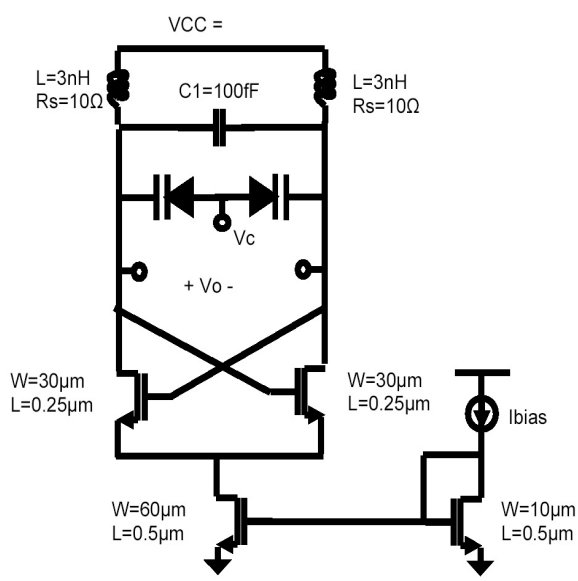

VTO=0.4V	KP=$200\mu A/V^2$	GAMMA=0.6	Phi=0.6	LAMBDA=0.15
CJ=$900\mu F/m^2$	PB=0.5V	TOX=7nm	CGSO=0.1nF/m	CGDO=0.1nF/m
Diode model :				
CJO=400fF	VJ=0.6V	M=0.4	IS=5fA	