University of California, Berkeley — *Spring 2008*
EECS 142 — *Prof. A. Niknejad*
NEEI 6361 — *GSI Wei-Hung Chen*

Problem Set 3
Due Wednesday February 20, 2008

1. For the common-base amplifier shown, calculate the Y parameters, stability factor K, and ideal power gain $G_{T_{max}}$ at 2.4 GHz. Neglect R_B, R_E and R_C and treat $C_{decouple}$ as a short.

2. Approximate the amplifier as an unilateral amplifier (y12→0), recalculate $G_{T_{max}}$. Match the input to a 50 Ω source and the output to a 200Ω load. Use simple (two component) resonant matching networks, selecting a topology that does not interfere with the biasing of the circuit (i.e. a network that inherently AC-couples the circuit to source and load). Redraw the schematic including these networks, label all component values.

3. Simulate your circuit in SPICE. Check the accuracy of the impedance matches at 2.4 GHz, that is, simulate for Z_{in} and Z_{out} of the amplifier plus matching networks, compare them with 50Ω and 200Ω. Find the transducer gain G_T of the matched circuit and compare this to the ideal gain found above... can you explain any discrepancies?... does the finite decoupling capacitor have an effect?

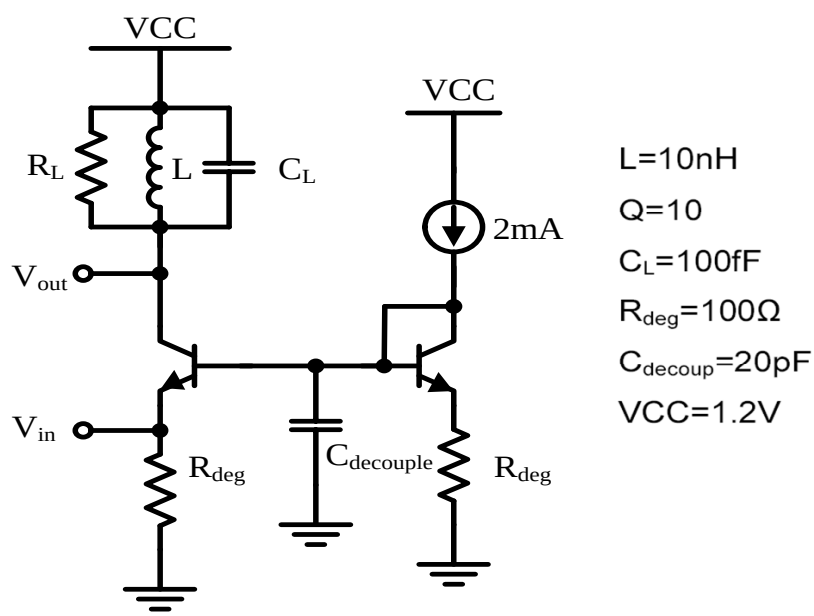

IS=1fA	BF=100	VAF=20V	ISE=300fA	NE=2
BR=10	NR=1	VAR=2V	ISC=200fA	NC=1
RB=5Ω	RE=0.8Ω	RC=3Ω	CJE=120fA	VJE=0.6V
MJE=0.27	TF=6.4ps	CJC=60fF	VJC=0.3V	