University of California, Berkeley — *Spring 2008*
EECS 142 — *Prof. A. Niknejad*
NEEI 6361 — *GSI Wei-Hung Chen*

Problem Set 7
Due Wednesday April 16, 2008

1. The circuit below is the receiver of a medical implant... It works by receiving a very strong signal at 25 MHz and a weaker, modulated signal at 100.5 MHz. The output is an IF signal at 500 kHz. That is:
   $V_{in} = V_{BIG} \times cos(2\pi{*}10MHz * t) + V_{SIG} \times cos(2\pi{*}100.5MHz * t)$,
   $V_{out} = G_{COV} \times V_{SIG} \times cos(2\pi{*}500kHz * t)$

   (a) What is the g_m of the transistor as a function of time? (assume square-law, $V_{TH} = 0$.
   (b) What is the Fourier series of $G_m(t)$
   (c) For V_{BIG}=200mV, what is the conversion gain of the mixer?
   (d) Confirm in simulation using $V_{SIG} = 20\ mV$

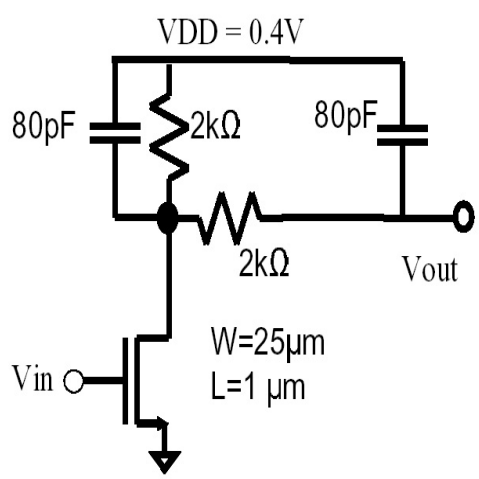

VTO=0V	KP=200$\mu A/V^2$	GAMMA=0.6	Phi=0.6	LAMBDA=0.015
CJ=900$\mu F/m^2$	PB=0.5V	TOX=7nm	CGSO=0.1nF/m	CGDO=0.1nF/m