University of California, Berkeley — *Fall 2007*
EECS 142 — *Prof. A. Niknejad*
NEEI 6361 — *GSI Wei-Hung Chen*

Example Problem Set
IIP_3, P_{1dB} calculation

1. We will be analyzing the nonlinear behavior of the cascaded, tuned amplifier shwon above. The key to analyzing a relatively complex circuit such as this is to ignore any components that do not affect your signal path and then attack it one stage at a time. Redraw the schematic, replacing as many components as you can with ideal components (as far as the signal is concerned, which devices can you treat as current sources/sinks, as infinite impedances, and as short circuits?). What small signal components can you ignore (i.e. is $r_o \gg Z_L$?).

   One additional hint: most of the small signal properties of an emitter degenerated transistor can be found by adjusting by a factor of $(1 + g_m R_E)$, that is, $g'_m = \frac{g_m}{1+g_m R_E}$, $r'_\pi = r_\pi \times (1 + g_m R_E)$, $C'_\pi = \frac{C_\pi}{1+g_m R_E}$, but $C'_\mu = C_\mu$

   (a) Find the small signal voltage gain, as a function of frequency. At what frequency is gain maximized? Confirm with a SPICE simulation.

   (b) What is the 3rd-order power series that best characterizes $I_d = f(V_{in})$ for the first differential pair? Remember that a BJT differential pair has the relationship: $I_d = I_{EE} \times tanh(\frac{V_{in}}{2V_T})$.

   (c) What is the 3rd-order power series that best characterizes $I_d = f(V_{mid})$ for the second differential pair?

   (d) What is the IIP3 of the cascaded amplifier? Assume that the two tones used to generate IM3 products are 1 GHz±1 MHz. Does the narrow-band nature of the amplifier prevent you from using the cascaded approximation? Note that the two tones and their IM3 products all fall in-band.

   (e) What is the input-referred 1 dB compression point of the cascaded amplifier for a 1 GHz signal? What is the HD3 of the cascaded amplifier for V_{in}=3 mV with a frequency of 1 GHz? Can you use the cascaded approximation? Confirm with SPICE.

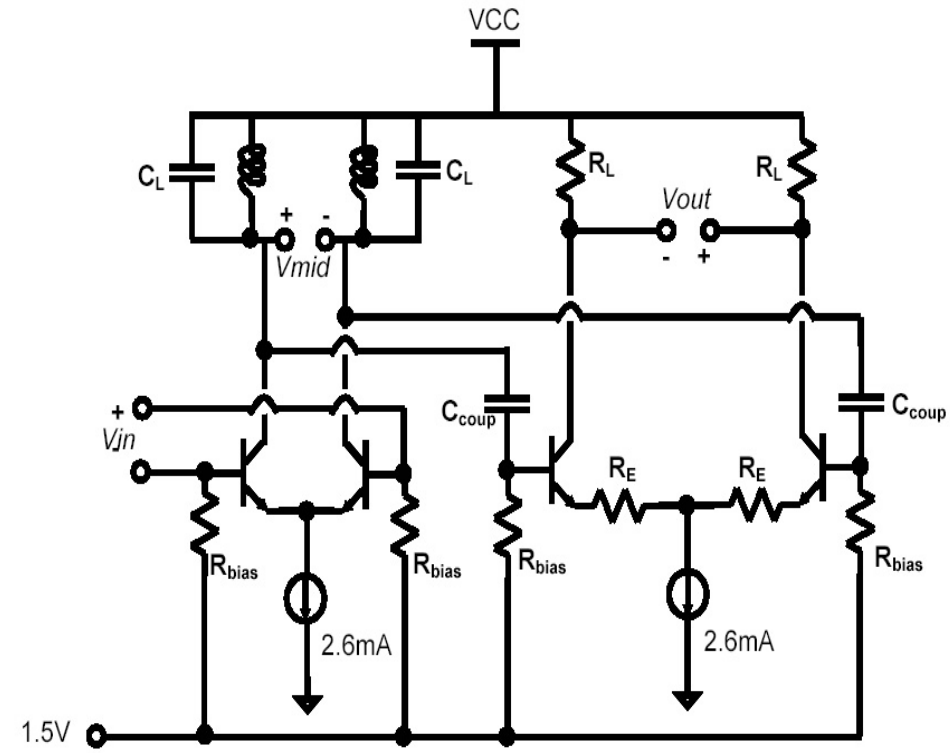

VCC = 2.5, R_E = 60Ω, R_L = 160Ω, R_{bias} = 10kΩ, C_{coup} = 100pF, C_L = 6.1pF, L = 4nH, Q_{ind} = 4

IS=1fA	BF=100	VAF=50V	ISE=300fA	NE=2
BR=10	NR=1	VAR=100V	ISC=200fA	NC=1
RB=0	RE=0	RC=0	CJE=120fF	VJE=0.6V
MJE=0.27	TF=6.4ps	CJC=60fF	VJC=0.3V	