then

$$b_1 = \frac{a_1}{1 + a_1 f}$$

$$b_2 = \frac{a_2}{(1 + a_1 f)^3}$$

$$b_3 = \frac{a_3(1 + a_1 f) - 2a_2^2 f}{(1 + a_1 f)^5}$$

2. (17 points) An oscillator is shown below.

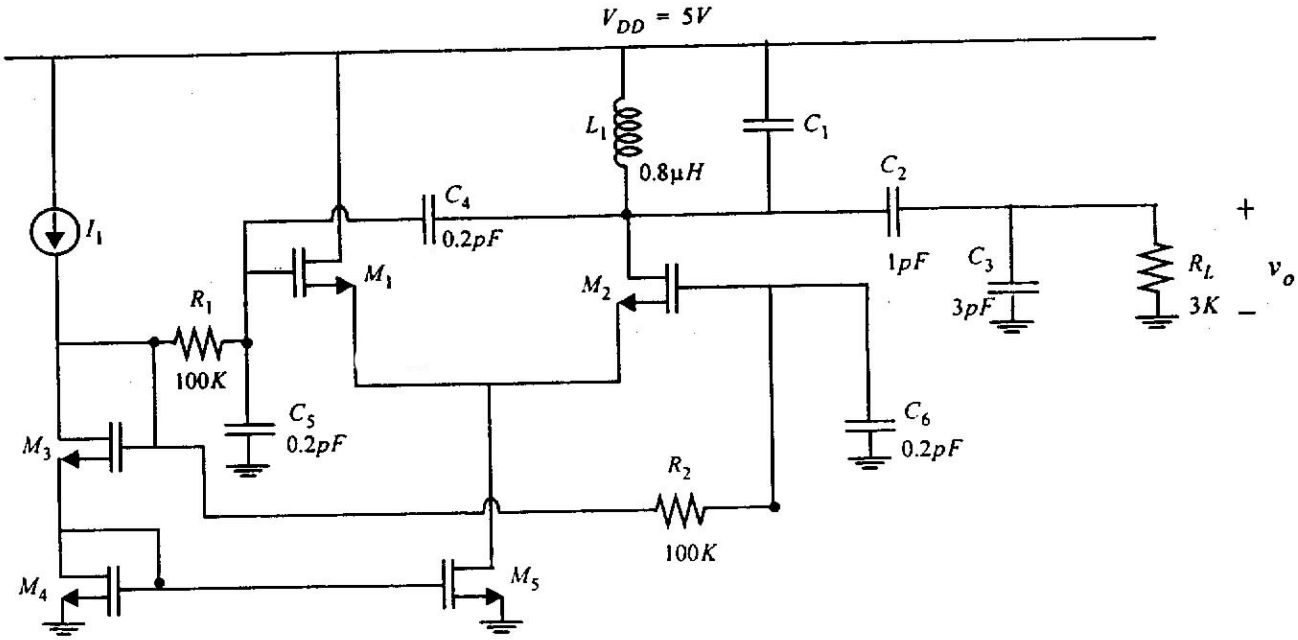


(a) Choose $C_1$, $I_1$, $\left(\frac{W}{L}\right)_1$ and $\left(\frac{W}{L}\right)_2$ so that this oscillator oscillates at a frequency of $100MHz$ and delivers $v_o = 0.5V_{pp}$ to $R_L = 3K$. An initial loop gain $A_l = 3$ is required.

Assume in steady state that $I_{D1}$ and $I_{D2}$ are square waves. The Fourier series of a square wave is

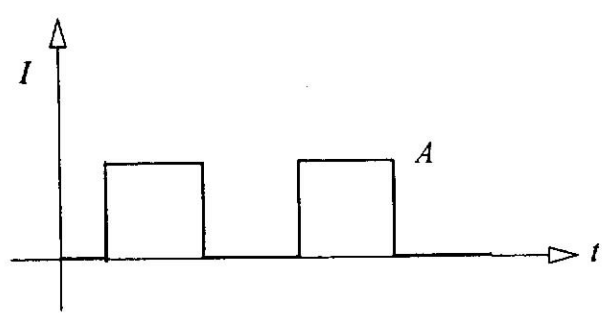


$$I = \frac{A}{2} + \frac{2A}{\pi}\left(\cos\omega t + \frac{1}{3}\cos\omega t + \frac{1}{5}\cos\omega t + \ldots\right)$$

The unloaded Q of $L_1$ is 50.

Device Data

$$I_D = \frac{\mu C_{ox}}{2}\frac{W}{L}(V_{GS} - V_t)^2$$

$$V_t = 0.7V$$

$$\lambda = 0.1V^{-1}$$

$$\mu C_{ox} = 80\mu A/V^2$$

(b) Calculate $HD_3$ at $v_o$.

(c) Calculate the time taken for the oscillation amplitude to rise from $0.1mV$ to $50mV$.

3. (17 points) A self-oscillating second harmonic mixer is shown below. The circuit oscillates at $f_0 = 50MHz$ and an input signal at $f_s = 110MHz$ mixes with the second harmonic of the oscillator to produce an $IF$ at $f_I = 10MHz$.

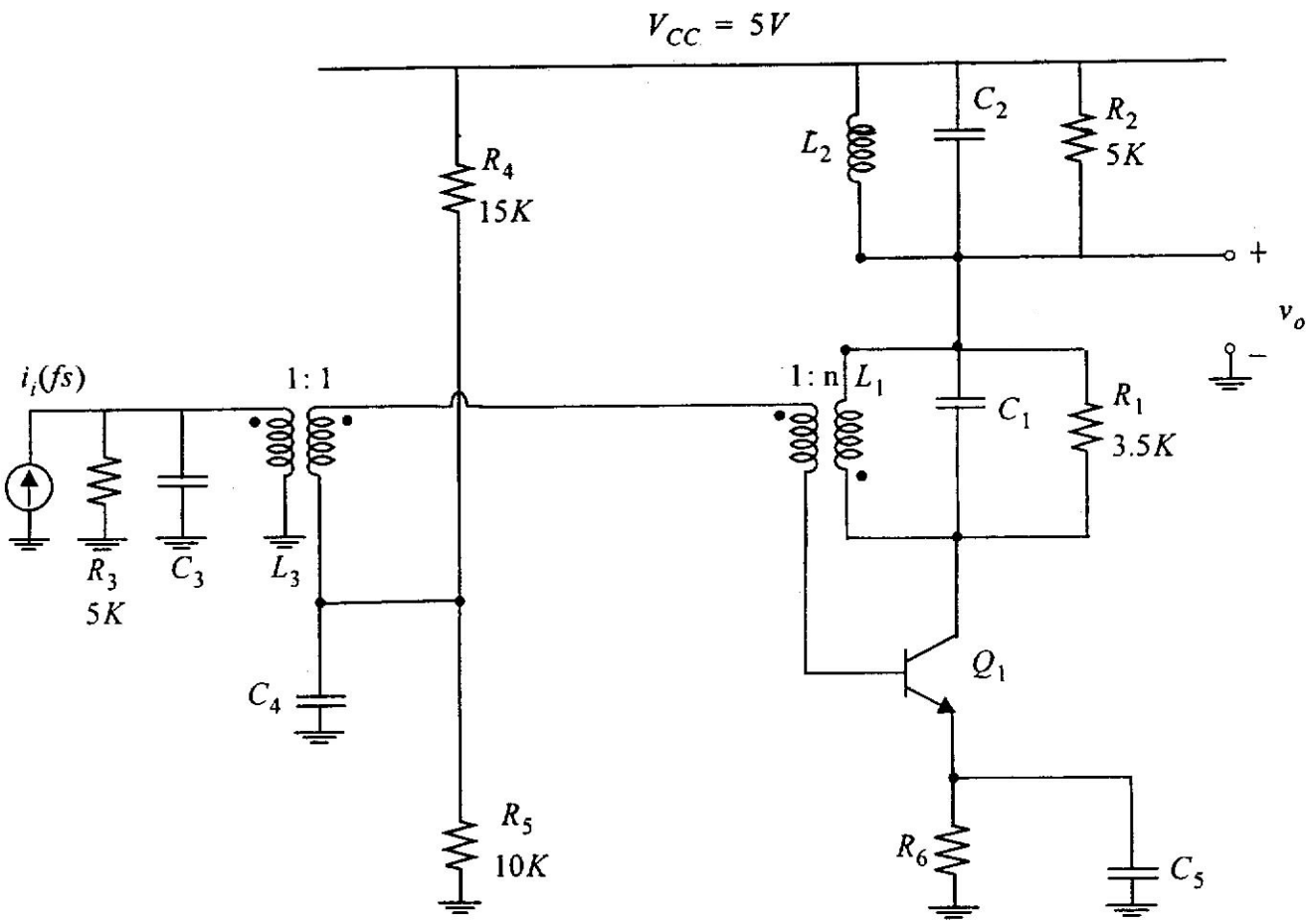

All inductor unloaded Q factors are 50.

<u>For $Q_1$</u>

$$\beta = 100,\ V_A = 20V,\ r_b = 0,\ f_T = \infty$$

$$\text{For bias use } V_{BE}(on) = 0.8V$$

Capacitors $C_4$ and $C_5$ are bypass capacitors.

(a) Design the oscillator to operate at $f_o = 50MHz$ with an output voltage amplitude of $1.3V$ o-p at $Q_1$ collector. Use initial loop gain $A_l = 5$ and $L_1 = 1\mu H$. Specify $C_1$, $n$ and $R_6$.

(b) Calculate the conversion gain from $i_i$ at $f_s = 110MHz$ to $v_o$ at $f_l = 10MHz$. Use $L_3 = 0.8\mu H$ and $L_2 = 3\mu H$.

(c) Calculate the oscillator voltage (leakage) appearing across $i_i$ and also across $v_o$.

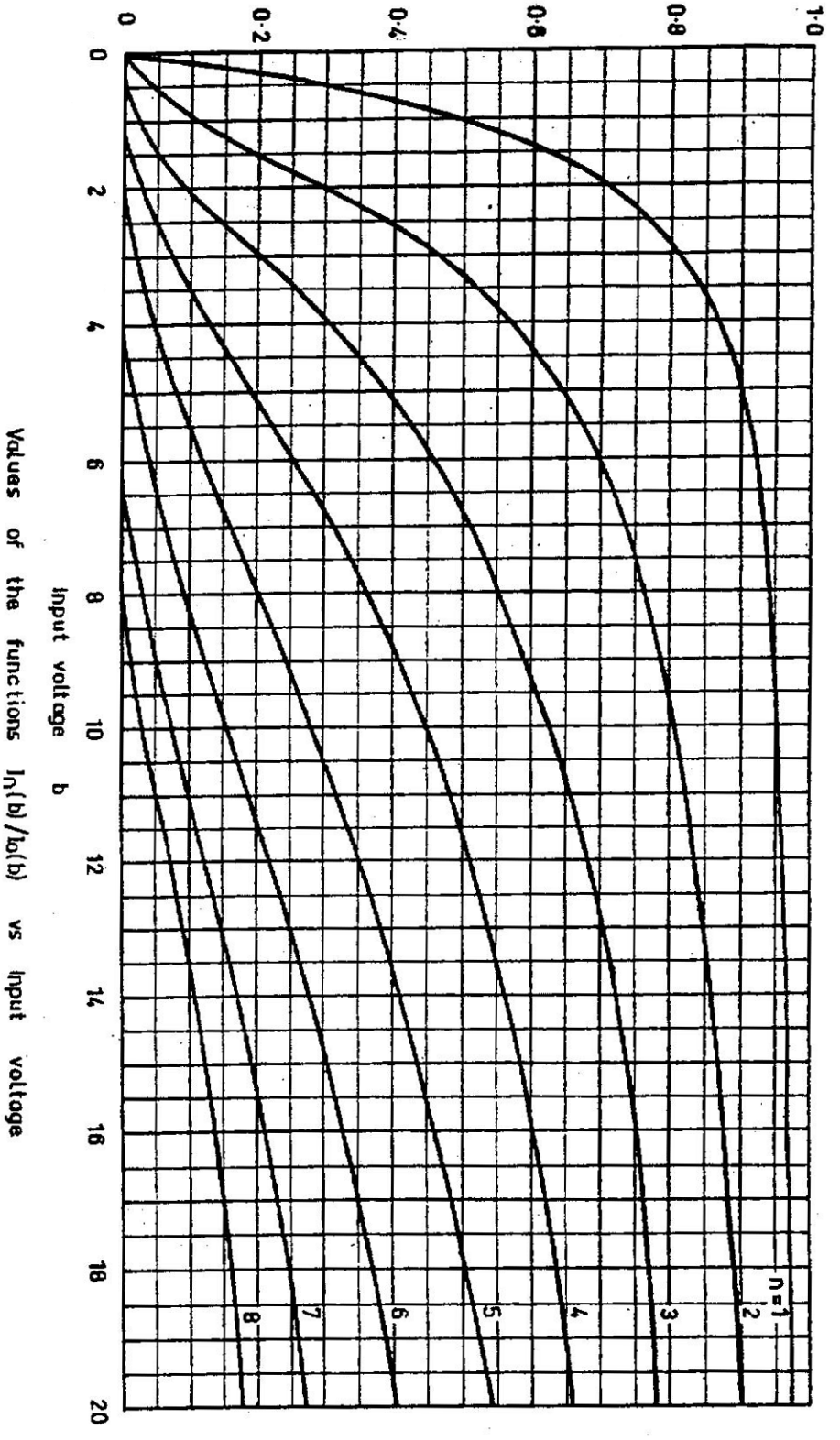


Values of the functions $I_n(b)/I_0(b)$ vs input voltage

Figure 3.4

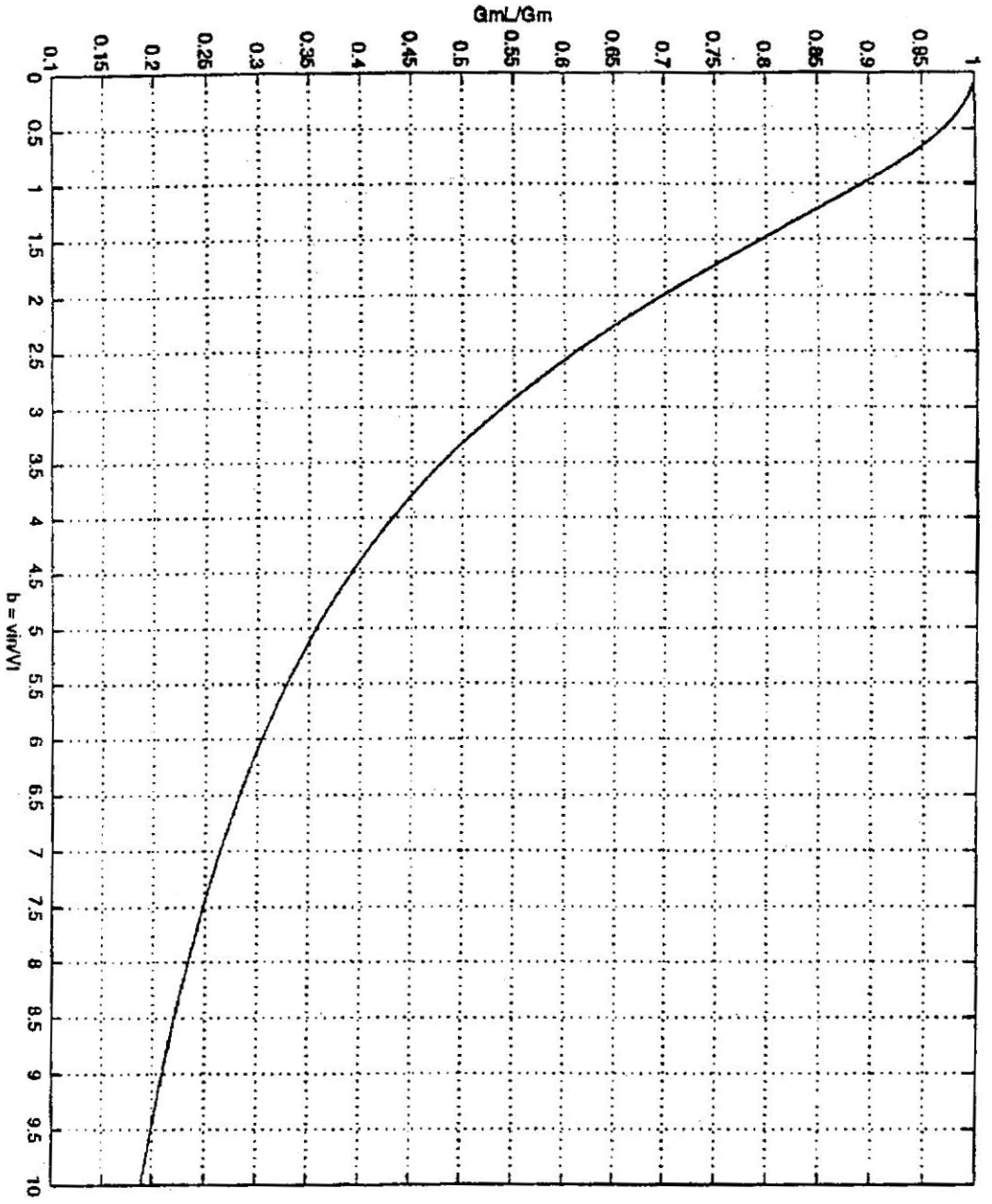


Plot of $G_{ML}/g_{mQ}$ vs. b for a single BJT

Figure 3.13