2. (17 points) An oscillator is shown below.

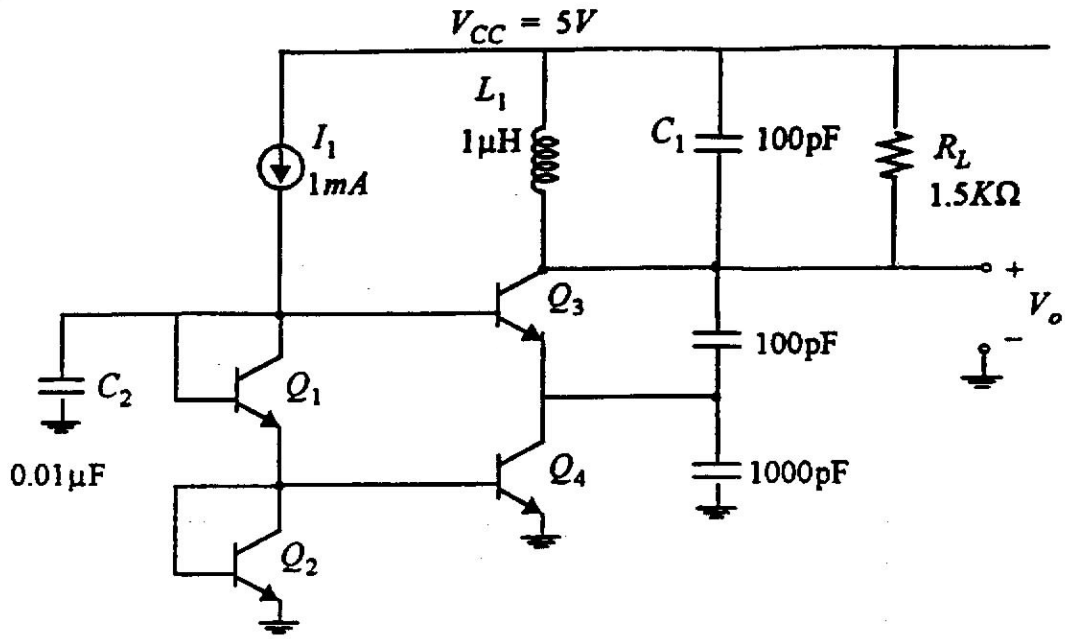

The unloaded Q of L_1 is 50.

Device Data: $I_s = 10^{-16} A$, $r_b = 0$, $V_A = \infty$, $\beta = \infty$.

(a) Calculate the frequency of oscillation and the steady-state output voltage amplitude V_o.

(b) Calculate HD_2 and HD_3 in V_o.

(c) Calculate the time required for V_o to double during oscillation build-up.

(d) Calculate the time required for V_o to fall by half if the base of Q_3 is suddenly grounded.

3. (17 Points) A mixer circuit is shown below:

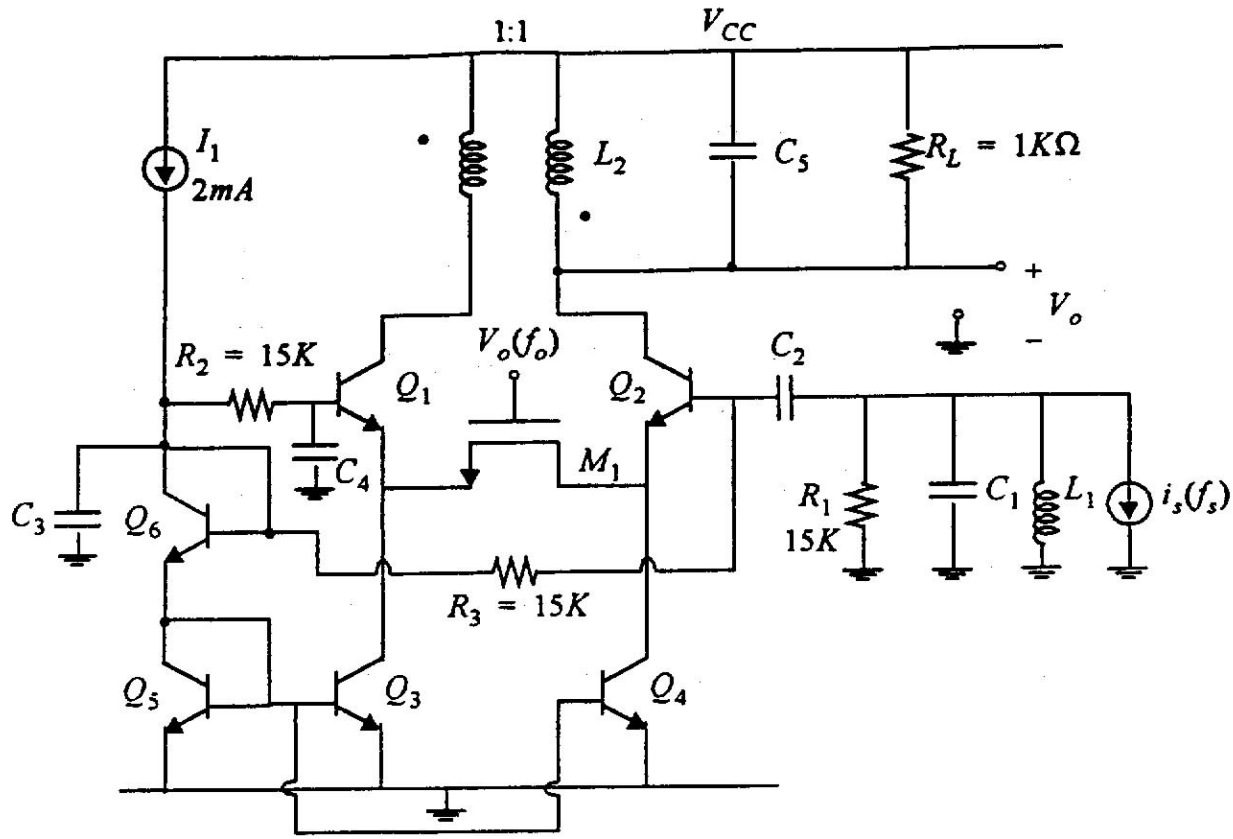

C_2, C_3 and C_4 are large. Local oscillator voltage V_o is a square wave that alternately turns MOSFET M_1 off an on. In the on state the drain-source resistance of M_1 is 100Ω.

<u>Device Data</u>: $\beta = 50$, $r_b = 0$, $V_A = \infty$, $I_s = 10^{-16}A$.

L_2 and C_5 are tuned to the IF $f_1 = f_o - f_s = 10\text{MHz}$.

L_1 and C_1 are tuned to signal frequency $f_s = 100\text{MHz}$.

(a) Calculate the IF output voltage at V_o if $i_s(f_s)$ is a sinusoid with value $1\mu A$ rms.

(b) Calculate the amplitude of the signal at frequency f_s which also appears at V_o if the Q of the IF tank is 30.

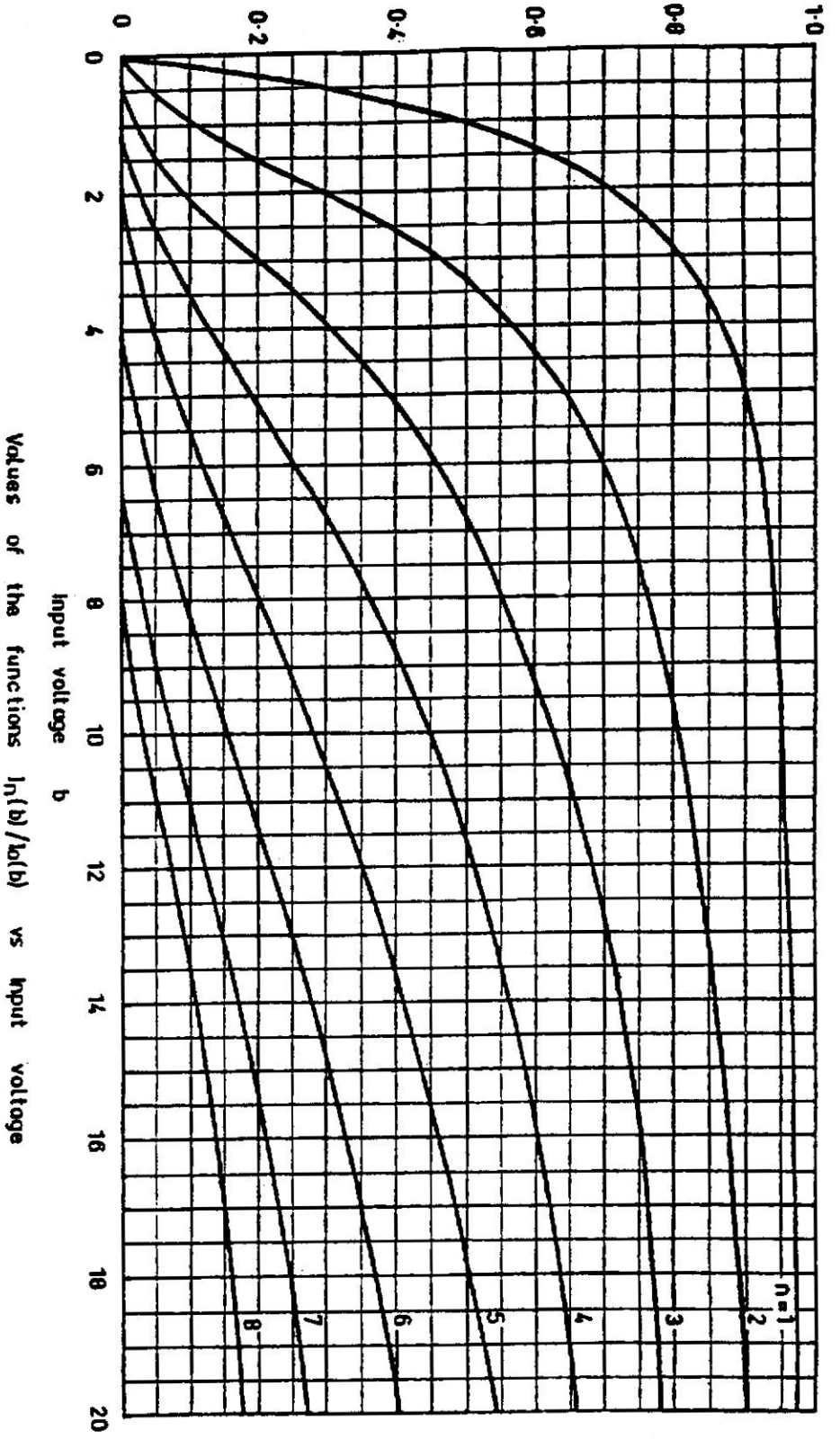
1·0
0·8
0·6
0·4
0·2
0
0
2
4
6
8
10
12
14
16
18
20
n=1
2
3
4
5
6
7
8
Values of the functions $I_n(b)/I_0(b)$ vs input voltage
input voltage b

Figure 3.4

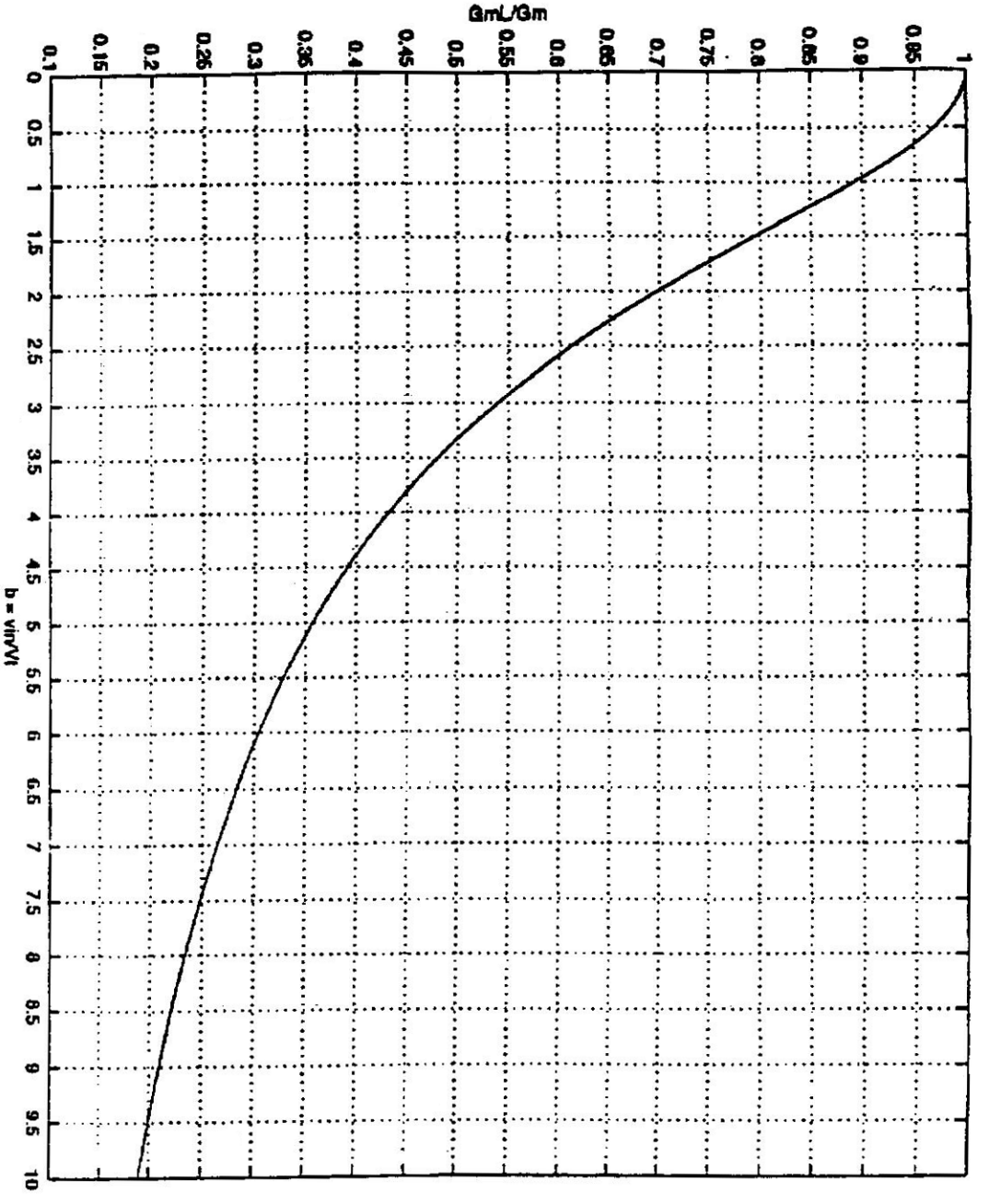

Plot of G_{mL}/g_{mQ} vs. b for a single BJT

Figure 3.13