UNIVERSITY OF CALIFORNIA
College of Engineering
Department of Electrical Engineering
and Computer Sciences

Problem Set 6 **EECS 242**

Prof. Meyer **Spring 2006**

The ac schematic of a common-base stage is shown below, where i_i is the signal input.

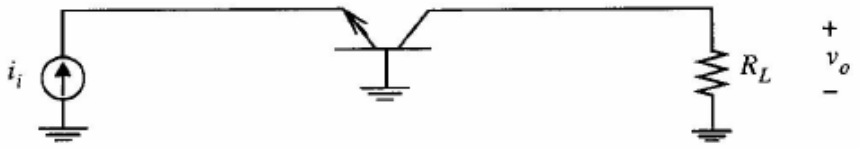

Neglect effects of dc Beta

Bias current $I_{CQ} = 1\,\text{mA}$, $\tau_F = 20\,\text{pS}$, $R_L = 1K\Omega$ and $C_{je} = 0.2\,\text{pF}$ (assumed constant) at the bias point. Neglect the effect of r_b and C_μ.

1. Calculate functional expressions for the first and second order Volterra coefficients linking i_i and v_o.
2. Calculate IM_3 in v_o for two signals of equal output amplitude 100 mV rms and approximately equal frequencies of 400 MHz. Make use of the approximation that the signal frequency is much less than f_T.

Verify using SPICE.

A simplified schematic of a variable gain amplifier is shown below. V_{B1} and V_{B2} are dc voltages and the gain control voltage $V_C = V_{B1} - V_{B2}$. Current I_A is bias and i_S is the signal input.

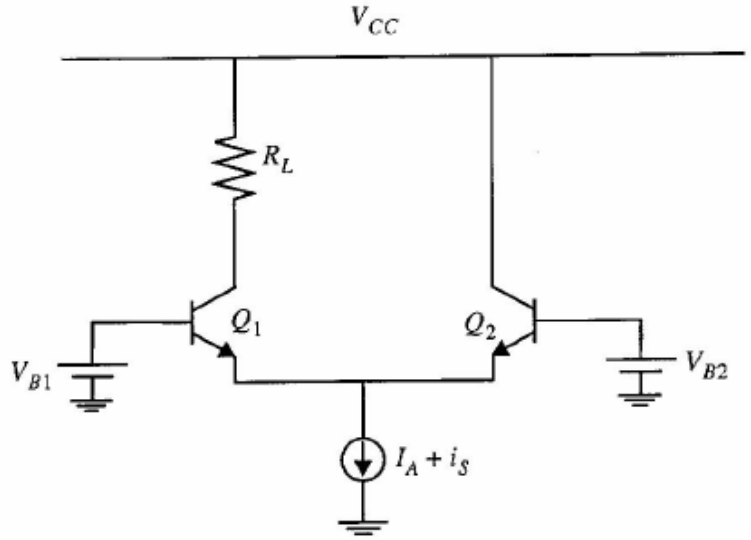

Neglect the effects of β, C_{je}, C_μ and C_{CS}. Show that for high attenuation, the high-frequency distortion in the circuit becomes independent of attenuation by considering the effects of finite f_T and r_b. Assume that the effect of r_b in Q_1 is negligible (low bias current) and that $I_{C1} \ll I_{C2}$.

Thus calculate HD_2 in the circuit for a signal input $i_S = 0.1$ mA at 500 MHz with $I_A = 1$ mA, $\tau_F = 30$ pS and $r_b = 100\Omega$.