UNIVERSITY OF CALIFORNIA
College of Engineering
Department of Electrical Engineering and Computer Sciences
NTU 247

	Homework 1	**EECS 247**
B. E. BOSER	**Due Thursday, Sep 21, 2006**	**Fall 2006**

Note: You need to show zoom-in plots of your filter response around the passband and stopband corners, for both MATLAB and SPICE results, to demonstrate that you meet the specs.

Design a 2nd order (i.e. single biquad) bandpass filter with 1MHz center frequency and 250kHz 3dB-bandwidth.

a) Calculate ω_P and Q_P.
b) Plot a 3D perspective view of the magnitude response of the filter.
c) Implement the filter with a 2nd order Sallen-Key section (see next page). Calculate all element values and the amplifier gain K. For simplicity make all capacitors 1pF and choose all resistors equal size. Calculate also the resulting filter gain G.
d) Verify the transfer function with SPICE for nominal values and with a 5% variation of K. By how much are ω_P and Q_P changing?
e) Calculate the sensitivity $S_K^{Q_P}$ and compare the analytical and simulation results.
f) Return to nominal component values but add two 5% shunt capacitors from both terminals of C_2 to ground. By how much are ω_P and Q_P changing?

(The Sallen-Key bandpass filter design equations are shown on the next page)

Second-order Sallen-Key bandpass section:

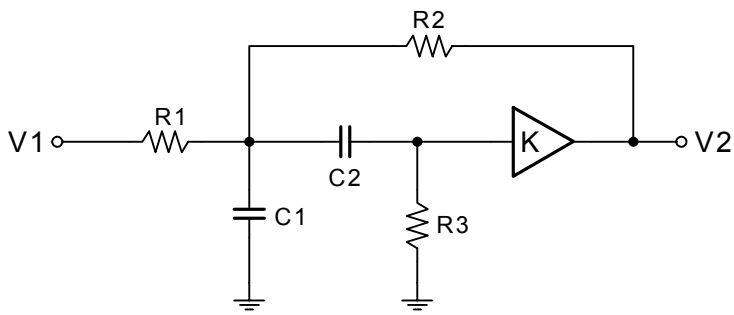

Design equations:

Transfer function $$H_{BP}(s) = \frac{G\frac{\omega_0}{Q}s}{s^2 + \frac{\omega_0}{Q}s + \omega_0{}^2}$$

Center frequency $$\omega_0 = \sqrt{\frac{R_1 + R_2}{R_1 R_2 R_3 C_1 C_2}}$$

Quality factor $$Q = \frac{\omega_0}{\frac{1}{R_1C_1} + \frac{1}{R_3C_2} + \frac{1}{R_3C_1} + \frac{1-K}{R_2C_1}}$$

Gain $$G = \frac{\frac{K}{R_1C_1}}{\frac{1}{R_1C_1} + \frac{1}{R_3C_2} + \frac{1}{R_3C_1} + \frac{1-K}{R_2C_1}}$$