EECS150

Section 4

Finite State Machines

Fall 2001

Abstraction of State Elements

- Divide circuit into combinational logic and state
- Localize feedback loops and make it easy to break cycles
- Implementation of storage elements leads to various forms of sequential logic

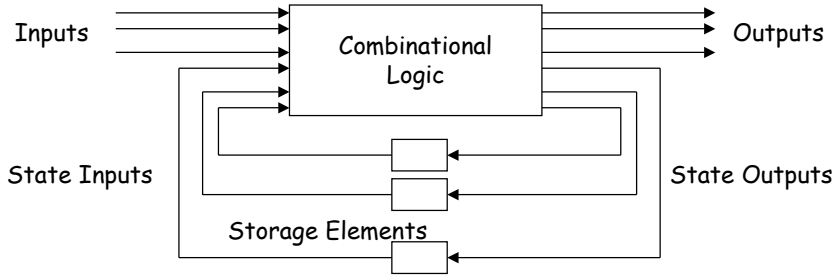

Finite State Machine Representation

- States: determined by possible values in sequential storage elements
- Transitions: change of state
- Clock: controls when state can change by controlling storage elements

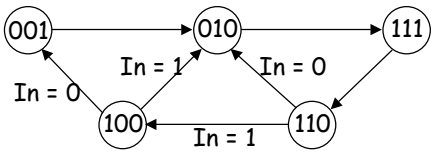

- Sequential Logic
  - Sequences through a series of states
  - Based on sequence of values on input signals
  - Clock period defines elements of sequence

Pieces of FSMs

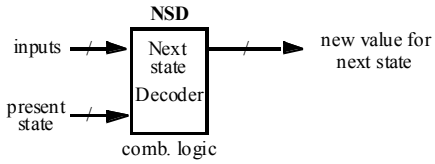

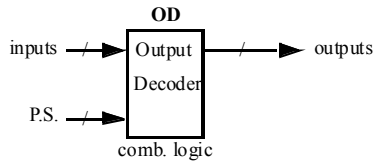

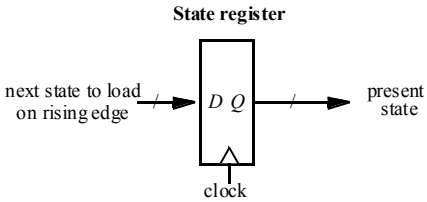

Types of FSM's

Moore and Mealey FSM

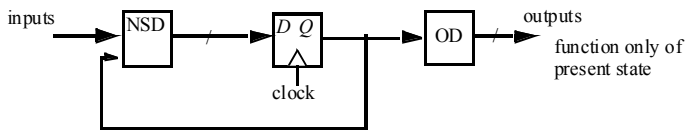

Moore

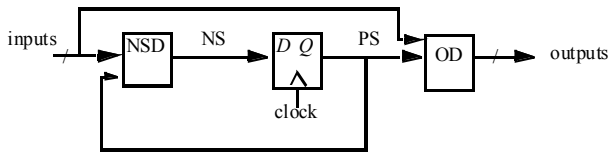

Mealey

Example Finite State Machine

- Combination lock from first lecture

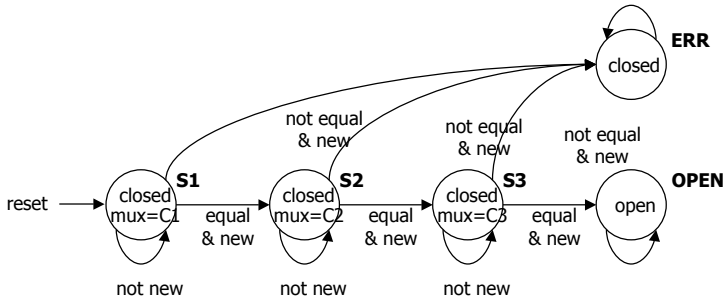

Shift Registers as FSM's

- Shift Register
  - Input value shown on transition arcs
  - Output values shown within state node

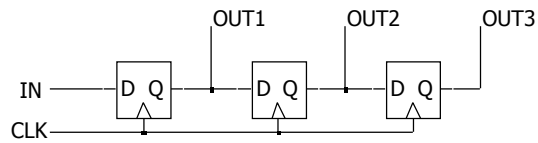

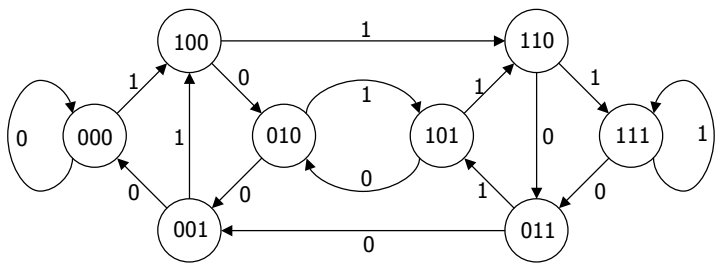

Counters as FSM's

- Counters
  - Proceed thru well-defined state sequence in response to enable
- Many types of counters: binary, BCD, Gray-code
  - 3-bit up-counter: 000, 001, 010, 011, 100, 101, 110, 111, 000, ...
  - 3-bit down-counter: 111, 110, 101, 100, 011, 010, 001, 000, 111, ...

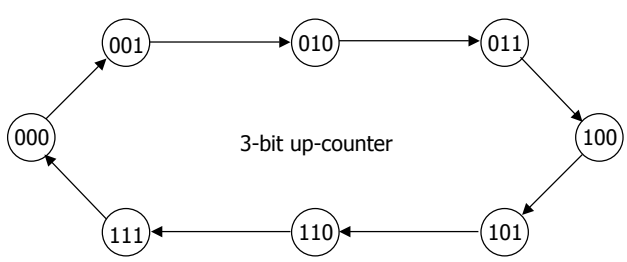

Turn a State Diagram into Logic

- Counter
  - Three flip-flops to hold state
  - Logic to compute next state
  - Clock signal controls when flip-flop memory can change
    - Wait long enough for combinational logic to compute new value
    - Don't wait too long as that is low performance

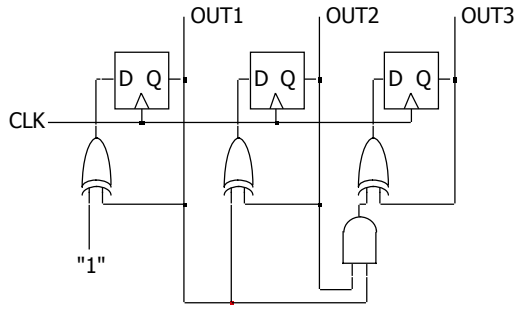

State Transition Table

- Tabular form of state diagram
- Like a truth-table (specify output for all input combinations)
- Encoding of states: easy for counters – just use value

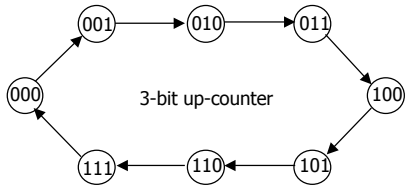

current state		next state	
0	000	001	1
1	001	010	2
2	010	011	3
3	011	100	4
4	100	101	5
5	101	110	6
6	110	111	7
7	111	000	0

N1 := C1'
N2 := C1C2' + C1'C2
:= C1 xor C2
N3 := C1C2C3' + C1'C3 + C2'C3
:= C1C2C3' + (C1' + C2')C3
:= (C1C2) xor C3

Implementation

- Programmable Logic Building Block for Sequential Logic
  - Macro-cell: FF + logic
    - D-FF
    - Two-level logic capability like PAL (e.g., 8 product terms)

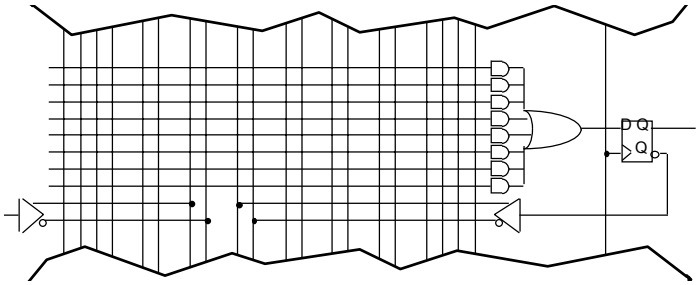

Another Example

- Shift Register
  - Input determines next state

In	C1	C2	C3	N1	N2	N3
0	0	0	0	0	0	0
0	0	0	1	0	0	0
0	0	1	0	0	0	1
0	0	1	1	0	0	1
0	1	0	0	0	1	0
0	1	0	1	0	1	0
0	1	1	0	0	1	1
0	1	1	1	0	1	1
1	0	0	0	1	0	0
1	0	0	1	1	0	0
1	0	1	0	1	0	1
1	0	1	1	1	0	1
1	1	0	0	1	1	0
1	1	0	1	1	1	0
1	1	1	0	1	1	1
1	1	1	1	1	1	1

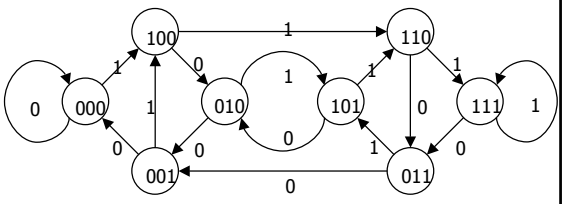

N1 := In
N2 := C1
N3 := C2

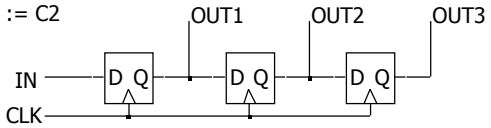

State Machine Model

- Values stored in registers represent the <u>state</u> of the circuit
- Combinational logic computes:
  - Next state
    - Function of current state and inputs
  - Outputs
    - Function of current state and inputs (Mealy machine)
    - Function of current state only (Moore machine)

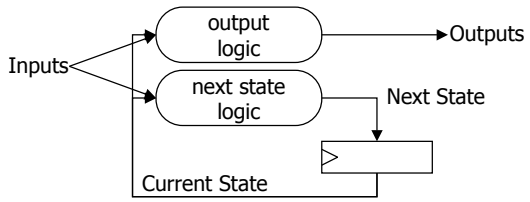

State Machine Model (cont'd)

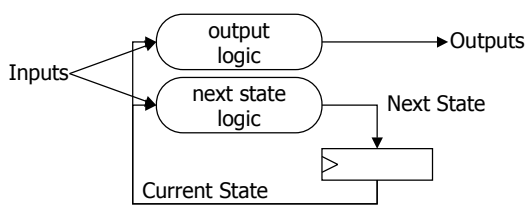

- States: S1, S2, ..., Sk
- Inputs: I1, I2, ..., Im
- Outputs: O1, O2, ..., On
- Transition function: Fs(Si, Ij)
- Output function: Fo(Si) or Fo(Si, Ij)

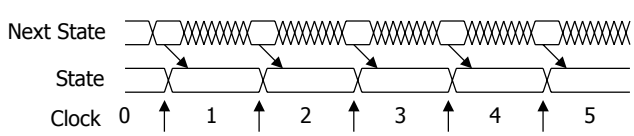

Specifying Outputs: Moore Machine

- Output is only function of state
  - Specify in state bubble in state diagram
  - Example: sequence detector for 01 or 10

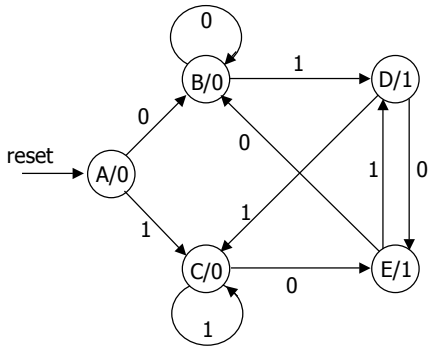

reset	input	current state	next state	output
1	–	–	A	
0	0	A	B	0
0	1	A	C	0
0	0	B	B	0
0	1	B	D	0
0	0	C	E	0
0	1	C	C	0
0	0	D	E	1
0	1	D	C	1
0	0	E	B	1
0	1	E	D	1

Specifying Outputs: Mealy Machine

- Output is function of state and inputs
  - Specify output on transition arc between states
  - Example: sequence detector for 01 or 10

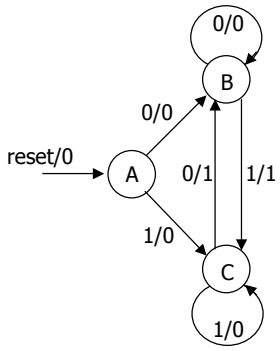

reset	input	current state	next state	output
1	–	–	A	0
0	0	A	B	0
0	1	A	C	0
0	0	B	B	0
0	1	B	C	1
0	0	C	B	1
0	1	C	C	0

Comparison: Mealy/Moore Machines

- Mealy Machines tend to have less states
  - Different outputs on arcs (n^2) rather than states (n)
- Moore Machines are safer to use
  - Outputs change at clock edge (always one cycle later)
  - In Mealy machines, input change can cause output change as soon as logic is done – a big problem when two machines are interconnected – asynchronous feedback
- Mealy Machines react faster to inputs
  - React in same cycle – don't need to wait for clock
  - In Moore machines, more logic may be necessary to decode state into outputs – more gate delays after

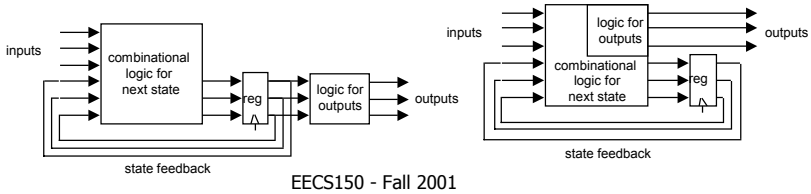

Mealy and Moore Examples

- Recognize A,B = 0,1
  - Mealy or Moore?

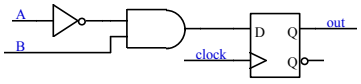

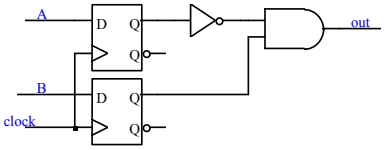

Mealy and Moore Examples

- Recognize A,B = 1,0 then 0,1
  - Mealy or Moore?

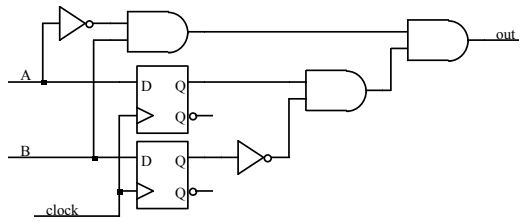

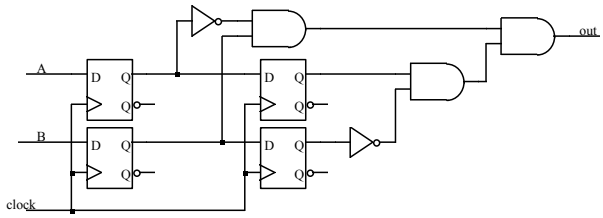

Registered Mealy (Really Moore)

- Synchronous (or registered) Mealy Machine
  - Registered state AND outputs
  - Avoids 'glitchy' outputs
  - Easy to implement in PLDs
- Moore Machine with no output decoding
  - Outputs computed on transition to next state rather than after entering
  - View outputs as expanded state vector

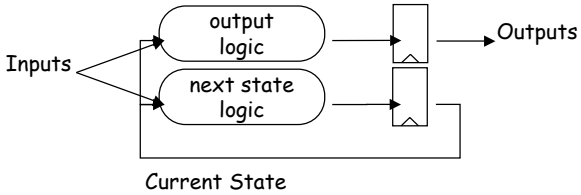

Example: Ant Brain (Ward, MIT)

- Sensors: L and R antennae, 1 if in touching wall
- Actuators: F - forward step, TL/TR - turn left/right slightly
- Goal: find way out of maze
- Strategy: keep the wall on the right

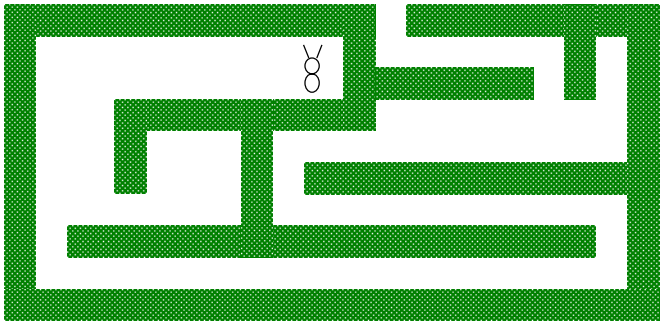

Ant Behavior

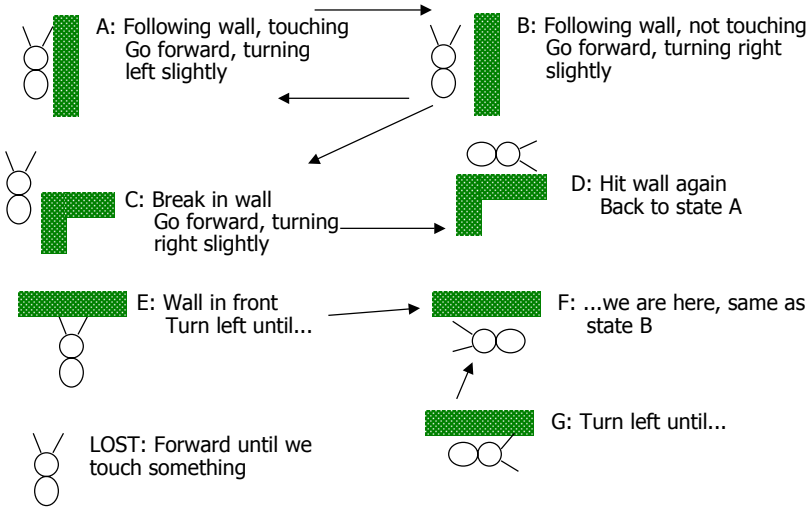

Designing an Ant Brain

- State Diagram

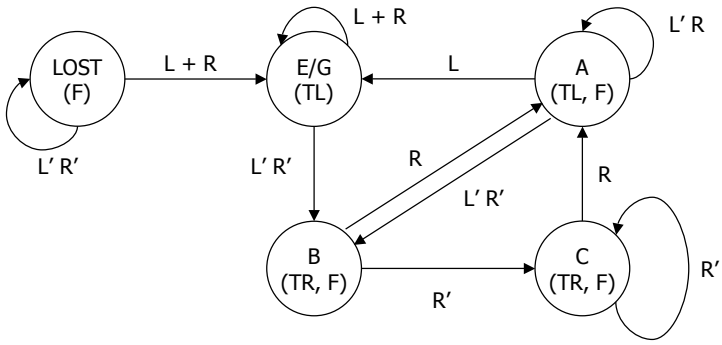

Synthesizing the Ant Brain Circuit

- Encode States Using a Set of State Variables
  - Arbitrary choice - may affect cost, speed
- Use Transition Truth Table
  - Define next state function for each state variable
  - Define output function for each output
- Implement next state and output functions using combinational logic
  - 2-level logic (ROM/PLA/PAL)
  - Multi-level logic
  - Next state and output functions can be optimized together

Transition Truth Table

- Using symbolic states and outputs

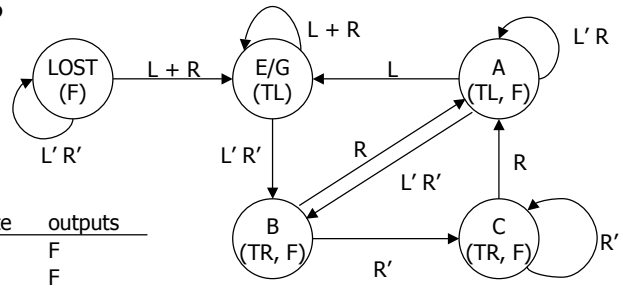

state	L	R	next state	outputs
LOST	0	0	LOST	F
LOST	–	1	E/G	F
LOST	1	–	E/G	F
A	0	0	B	TL, F
A	0	1	A	TL, F
A	1	–	E/G	TL, F
B	–	0	C	TR, F
B	–	1	A	TR, F
…	…	…	…	…

Synthesis

- 5 states : at least 3 state variables required (X, Y, Z)
  - State assignment (in this case, arbitrarily chosen)

state X,Y,Z	L	R	next state X', Y', Z'	outputs F	TR	TL
0 0 0	0	0	0 0 0	1	0	0
0 0 0	0	1	0 0 1	1	0	0
…	…	…	…	…		
0 1 0	0	0	0 1 1	1	0	1
0 1 0	0	1	0 1 0	1	0	1
0 1 0	1	0	0 0 1	1	0	1
0 1 0	1	1	0 0 1	1	0	1
0 1 1	0	0	1 0 0	1	1	0
0 1 1	0	1	0 1 0	1	1	0
…	…	…	…	…		

it now remains to synthesize these 6 functions

LOST	- 000
E/G	- 001
A	- 010
B	- 011
C	- 100

Synthesis - State, Output Functions

state X,Y,Z	inputs L	R	next state X^+,Y^+,Z^+	outputs F	TR	TL
0 0 0	0	0	0 0 0	1	0	0
0 0 0	-	1	0 0 1	1	0	0
0 0 0	1	-	0 0 1	1	0	0
0 0 1	0	0	0 1 1	0	0	1
0 0 1	-	1	0 1 0	0	0	1
0 0 1	1	-	0 1 0	0	0	1
0 1 0	0	0	0 1 1	1	0	1
0 1 0	0	1	0 1 0	1	0	1
0 1 0	1	-	0 0 1	1	0	1
0 1 1	-	0	1 0 0	1	1	0
0 1 1	-	1	0 1 0	1	1	0
1 0 0	-	0	1 0 0	1	1	0
1 0 0	-	1	0 1 0	1	1	0

e.g.

$TR = X + Y Z$

$X^+ = X R' + Y Z R' = R' TR$

Don't Cares in FSM Synthesis

- What happens to the "unused" states (101, 110, 111)?
- Exploited as don't cares to minimize the logic
  - If states can't happen, then don't care what the functions do
  - if states do happen, we may be in trouble

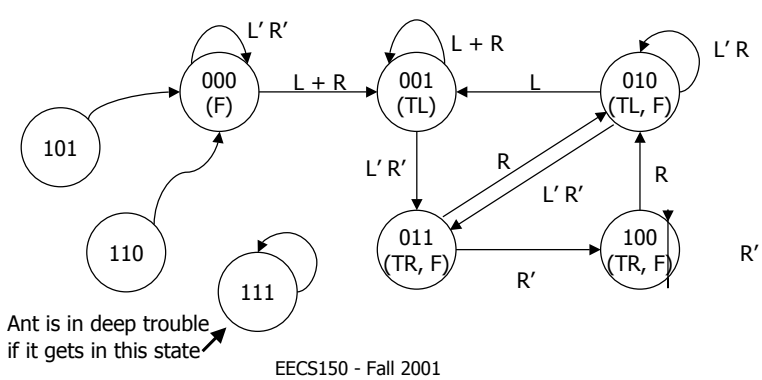

State Minimization

- Fewer states may mean fewer state variables
- High-level synthesis may generate many redundant states
- Two state are equivalent if they are impossible to distinguish from the outputs of the FSM, i. e., for any input sequence the outputs are the same

- Two conditions for two states to be equivalent:
  - 1) Output must be the same in both states
  - 2) Must transition to equivalent states for all input combinations

Ant Brain Revisited

- Any equivalent states?

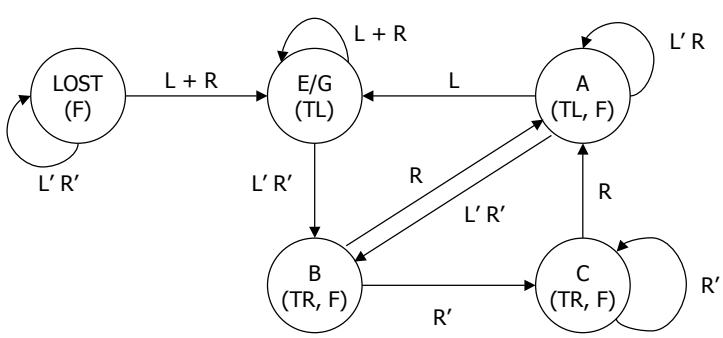

New Improved Brain

- Merge equivalent B and C states
- Behavior is exactly the same as the 5-state brain
- We now need only 2 state variables rather than 3

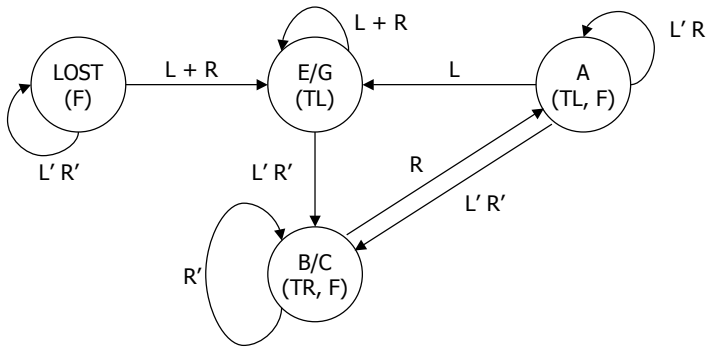

State Assignment

- Choose bit vectors to assign to each "symbolic" state
  - With n state bits for m states there are $2^n! / (2^n - m)!$
    [$\log n <= m <= 2^n$]
  - 2^n codes possible for 1st state, 2^n-1 for 2nd, 2^n-2 for 3rd, …
  - Huge number even for small values of n and m
    - Intractable for state machines of any size
    - Heuristics are necessary for practical solutions
  - Optimize some metric for the combinational logic
    - Size (amount of logic and number of FFs)
    - Speed (depth of logic and fanout)
    - Dependencies (decomposition)

State Assignment Strategies

- Possible Strategies
  - Sequential – just number states as they appear in the state table
  - Random – pick random codes
  - One-hot – use as many state bits as there are states (bit=1 –> state)
  - Output – use outputs to help encode states
  - Heuristic – rules of thumb that seem to work in most cases
- No guarantee of optimality – another intractable problem

One-hot State Assignment

- Simple
  - Easy to encode, debug
- Small Logic Functions
  - Each state function requires only predecessor state bits as input
- Good for Programmable Devices
  - Lots of flip-flops readily available
  - Simple functions with small support (signals its dependent upon)
- Impractical for Large Machines
  - Too many states require too many flip-flops
  - Decompose FSMs into smaller pieces that can be one-hot encoded
- Many Slight Variations to One-hot
  - One-hot + all-0

Heuristics for State Assignment

- Adjacent codes to states that share a common next state
  - Group 1's in next state map

I	Q	Q^+	O
i	a	c	j
i	b	c	k

c = i * a + i * b

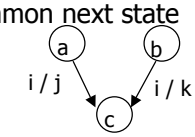

- Adjacent codes to states that share a common ancestor state
  - Group 1's in next state map

I	Q	Q^+	O
i	a	b	j
k	a	c	l

b = i * a
c = k * a

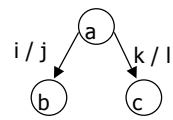

- Adjacent codes to states that have a common output behavior
  - Group 1's in output map

I	Q	Q^+	O
i	a	b	j
i	c	d	j

j = i * a + i * c
b = i * a
d = i * c

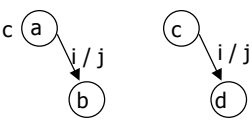

Heuristic State Assignment

- All current methods are variants of this
  - 1) Determine which states "attract" each other (weighted pairs)
  - 2) Generate constraints on codes (which should be in same cube)
  - 3) Place codes on Boolean cube so as to maximize constraints satisfied (weighted sum)
- Different weights make sense depending on whether we are optimizing for two-level or multi-level forms
- Can't consider all possible embeddings of state clusters in Boolean cube
  - Heuristics for ordering embedding
  - To prune search for best embedding
  - Expand cube (more state bits) to satisfy more constraints

Output-Based Encoding

- Reuse outputs as state bits - use outputs to help distinguish states
  - Why create new functions for state bits when output can serve as well
  - Fits in nicely with synchronous Mealy implementations

Inputs C	TL	TS	Present State	Next State	Outputs ST	H	F
0	–	–	HG	HG	0	00	10
–	0	–	HG	HG	0	00	10
1	1	–	HG	HY	1	00	10
–	–	0	HY	HY	0	01	10
–	–	1	HY	FG	1	01	10
1	0	–	FG	FG	0	10	00
0	–	–	FG	FY	1	10	00
–	1	–	FG	FY	1	10	00
–	–	0	FY	FY	0	10	01
–	–	1	FY	HG	1	10	01

HG = ST′ H1′ H0′ F1 F0′ + ST H1 H0′ F1′ F0
HY = ST H1′ H0′ F1 F0′ + ST′ H1′ H0 F1 F0′
FG = ST H1′ H0 F1 F0′ + ST′ H1 H0′ F1′ F0′
HY = ST H1 H0′ F1′ F0′ + ST′ H1 H0′ F1′ F0

Output patterns are unique to states, we do not need ANY state bits – implement 5 functions (one for each output) instead of 7 (outputs plus 2 state bits)

Current State Assignment

- For tight encodings using close to the minimum number of state bits
  - Best of 10 random seems to be adequate (averages as well as heuristics)
  - Heuristic approaches are not even close to optimality
  - Used in custom chip design
- One-hot encoding
  - Easy for small state machines
  - Generates small equations with easy to estimate complexity
  - Common in FPGAs and other programmable logic
- Output-based encoding
  - Ad hoc - no tools
  - Most common approach taken by human designers
  - Yields very small circuits for most FSMs

Example: Vending Machine

- Release item after 15 cents are deposited
- Single coin slot for dimes, nickels
- No change

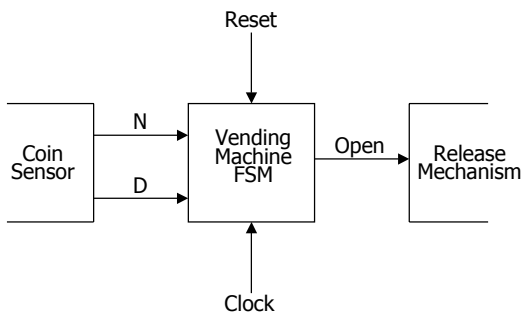

Example: Vending Machine

- Suitable Abstract Representation
  - Tabulate typical input sequences:
    - 3 nickels
    - nickel, dime
    - dime, nickel
    - two dimes
  - Draw state diagram:
    - Inputs: N, D, reset
    - Output: open chute
  - Assumptions:
    - Assume N and D asserted for one cycle
    - Each state has a self loop for N = D = 0 (no coin)

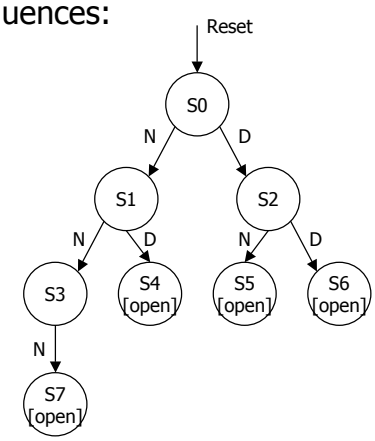

Example: Vending Machine

- Minimize number of states - reuse states whenever possible

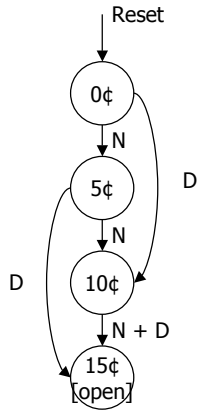

present state	inputs D	N	next state	output open
0¢	0	0	0¢	0
	0	1	5¢	0
	1	0	10¢	0
	1	1	–	–
5¢	0	0	5¢	0
	0	1	10¢	0
	1	0	15¢	0
	1	1	–	–
10¢	0	0	10¢	0
	0	1	15¢	0
	1	0	15¢	0
	1	1	–	–
15¢	–	–	15¢	1

symbolic state table

Example: Vending Machine

- Uniquely Encode States

present state Q1	Q0	inputs D	N	next state D1	D0	output open
0	0	0	0	0	0	0
		0	1	0	1	0
		1	0	1	0	0
		1	1	–	–	–
0	1	0	0	0	1	0
		0	1	1	0	0
		1	0	1	1	0
		1	1	–	–	–
1	0	0	0	1	0	0
		0	1	1	1	0
		1	0	1	1	0
		1	1	–	–	–
1	1	–	–	1	1	1

Example: Vending Machine

- Mapping to Logic

D1 = Q1 + D + Q0 N

D0 = Q0′ N + Q0 N′ + Q1 N + Q1 D

OPEN = Q1 Q0

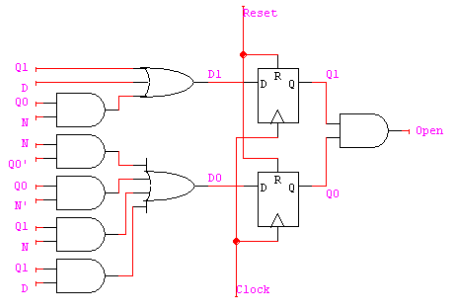

PLD mapping

D0 = reset'(Q0'N + Q0N' + Q1N + Q1D)
D1 = reset'(Q1 + D + Q0N)
OPEN = Q1Q0

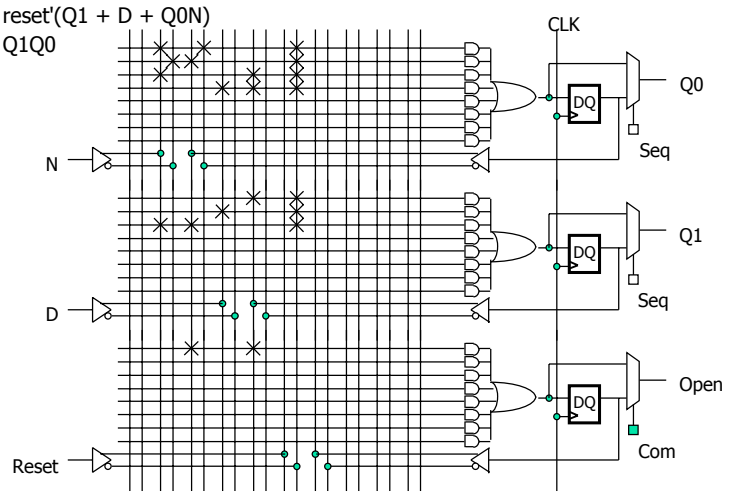

Vending Machine

- OPEN = Q1Q0 creates a combinational delay after Q1 and Q0 change
- This can be corrected by retiming, i.e., move flip-flops and logic through each other to improve delay
- OPEN = reset'(Q1 + D + Q0N)(Q0'N + Q0N' + Q1N + Q1D)
  = reset'(Q1Q0N' + Q1N + Q1D + Q0'ND + Q0N'D)
- Implementation now looks like a synchronous Mealy machine
  - Common for programmable devices to have FF at end of logic

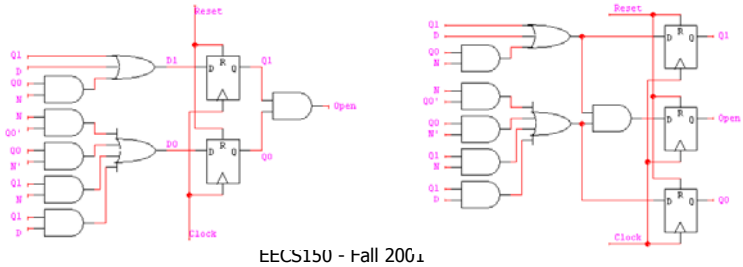

Retimed PLD Mapping

OPEN = reset'(Q1Q0N' + Q1N + Q1D + Q0'ND + Q0N'D)

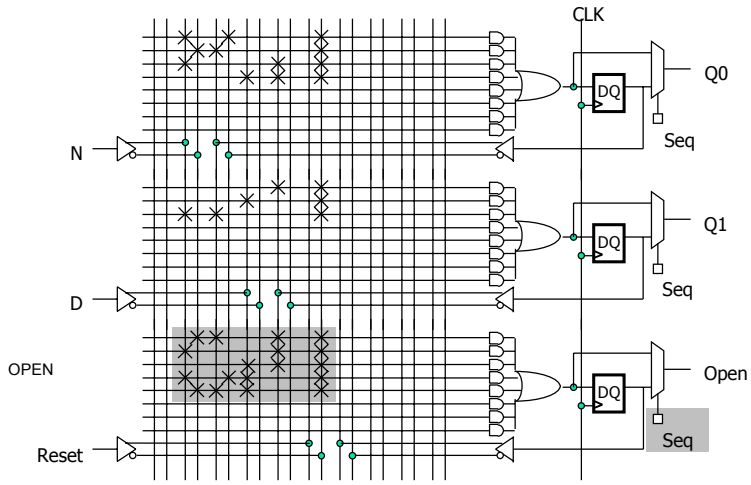

Example: Vending Machine

- One-hot Encoding

present state Q3	Q2	Q1	Q0	inputs D	N	next state output D3	D2	D1	D0	open
0	0	0	1	0	0	0	0	0	1	0
				0	1	0	0	1	0	0
				1	0	0	1	0	0	0
				1	1	-	-	-	-	-
0	0	1	0	0	0	0	0	1	0	0
				0	1	0	1	0	0	0
				1	0	1	0	0	0	0
				1	1	-	-	-	-	-
0	1	0	0	0	0	0	1	0	0	0
				0	1	1	0	0	0	0
				1	0	1	0	0	0	0
				1	1	-	-	-	-	-
1	0	0	0	-	-	1	0	0	0	1

D0 = Q0 D′ N′

D1 = Q0 N + Q1 D′ N′

D2 = Q0 D + Q1 N + Q2 D′ N′

D3 = Q1 D + Q2 D + Q2 N + Q3

OPEN = Q3

Example: Traffic Light Controller

- A busy highway is intersected by a little used farmroad
- Detectors C sense the presence of cars waiting on the farmroad
  - with no car on farmroad, light remain green in highway direction
  - if vehicle on farmroad, highway lights go from Green to Yellow to Red, allowing the farmroad lights to become green
  - these stay green only as long as a farmroad car is detected but never longer than a set interval
  - when these are met, farm lights transition from Green to Yellow to Red, allowing highway to return to green
  - even if farmroad vehicles are waiting, highway gets at least a set interval as green
- Assume you have an interval timer that generates:
  - a short time pulse (TS) and
  - a long time pulse (TL),
  - in response to a set (ST) signal.
  - TS is to be used for timing yellow lights and TL for green lights

Example: Traffic Light Controller

- Highway/farm road intersection

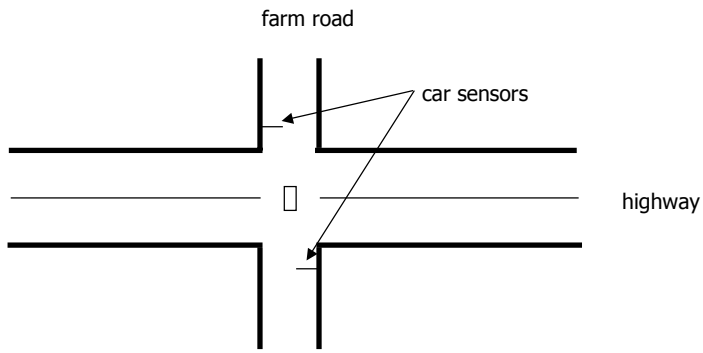

Example: Traffic Light Controller

- Tabulation of Inputs and Outputs

inputs	description	outputs	description
reset	place FSM in initial state	HG, HY, HR	assert grn/ylw/red hwy lights
C	detect vehicle on farm rd	FG, FY, FR	assert grn/ylw/red hwy lights
TS	short time interval expired	ST	start timing a short/long interval
TL	long time interval expired		

- Tabulation of unique states – some light configurations imply others

state	description
S0	highway green (farm road red)
S1	highway yellow (farm road red)
S2	farm road green (highway red)
S3	farm road yellow (highway red)

Example: Traffic Light Controller

- State Diagram

S0: HG

S1: HY

S2: FG

S3: FY

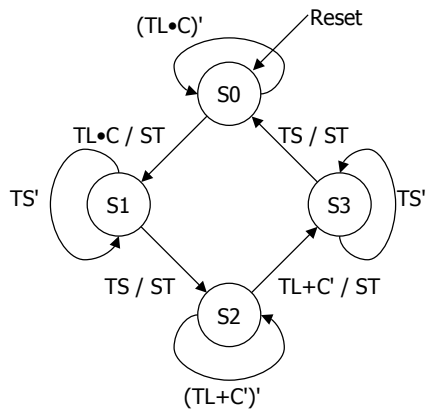

Example: Traffic Light Controller

- Generate state table with symbolic states
- Consider state assignments

output encoding – similar problem to state assignment (Green = 00, Yellow = 01, Red = 10)

Inputs C	TL	TS	Present State	Next State	Outputs ST	H	F
0	–	–	HG	HG	0	Green	Red
–	0	–	HG	HG	0	Green	Red
1	1	–	HG	HY	1	Green	Red
–	–	0	HY	HY	0	Yellow	Red
–	–	1	HY	FG	1	Yellow	Red
1	0	–	FG	FG	0	Red	Green
0	–	–	FG	FY	1	Red	Green
–	1	–	FG	FY	1	Red	Green
–	–	0	FY	FY	0	Red	Yellow
–	–	1	FY	HG	1	Red	Yellow

SA1:	HG = 00	HY = 01	FG = 11	FY = 10	
SA2:	HG = 00	HY = 10	FG = 01	FY = 11	
SA3:	HG = 0001	HY = 0010	FG = 0100	FY = 1000	(one-hot)

Logic for State Assignments

- SA1

  NS1 = C•TL'•PS1•PS0 + TS•PS1'•PS0 + TS•PS1•PS0' + C'•PS1•PS0 + TL•PS1•PS0
  NS0 = C•TL•PS1'•PS0' + C•TL'•PS1•PS0 + PS1'•PS0

  ST = C•TL•PS1'•PS0' + TS•PS1'•PS0 + TS•PS1•PS0' + C'•PS1•PS0 + TL•PS1•PS0
  H1 = PS1 H0 = PS1'•PS0
  F1 = PS1' F0 = PS1•PS0'

- SA2

  NS1 = C•TL•PS1' + TS'•PS1 + C'•PS1'•PS0
  NS0 = TS•PS1•PS0' + PS1'•PS0 + TS'•PS1•PS0

  ST = C•TL•PS1' + C'•PS1'•PS0 + TS•PS1
  H1 = PS0 H0 = PS1•PS0'
  F1 = PS0' F0 = PS1•PS0

- SA3

  NS3 = C'•PS2 + TL•PS2 + TS'•PS3 NS2 = TS•PS1 + C•TL'•PS2
  NS1 = C•TL•PS0 + TS'•PS1 NS0 = C'•PS0 + TL'•PS0 + TS•PS3

  ST = C•TL•PS0 + TS•PS1 + C'•PS2 + TL•PS2 + TS•PS3
  H1 = PS3 + PS2 H0 = PS1
  F1 = PS1 + PS0 F0 = PS3