EECS150 Homework #5 Solutions:

1)

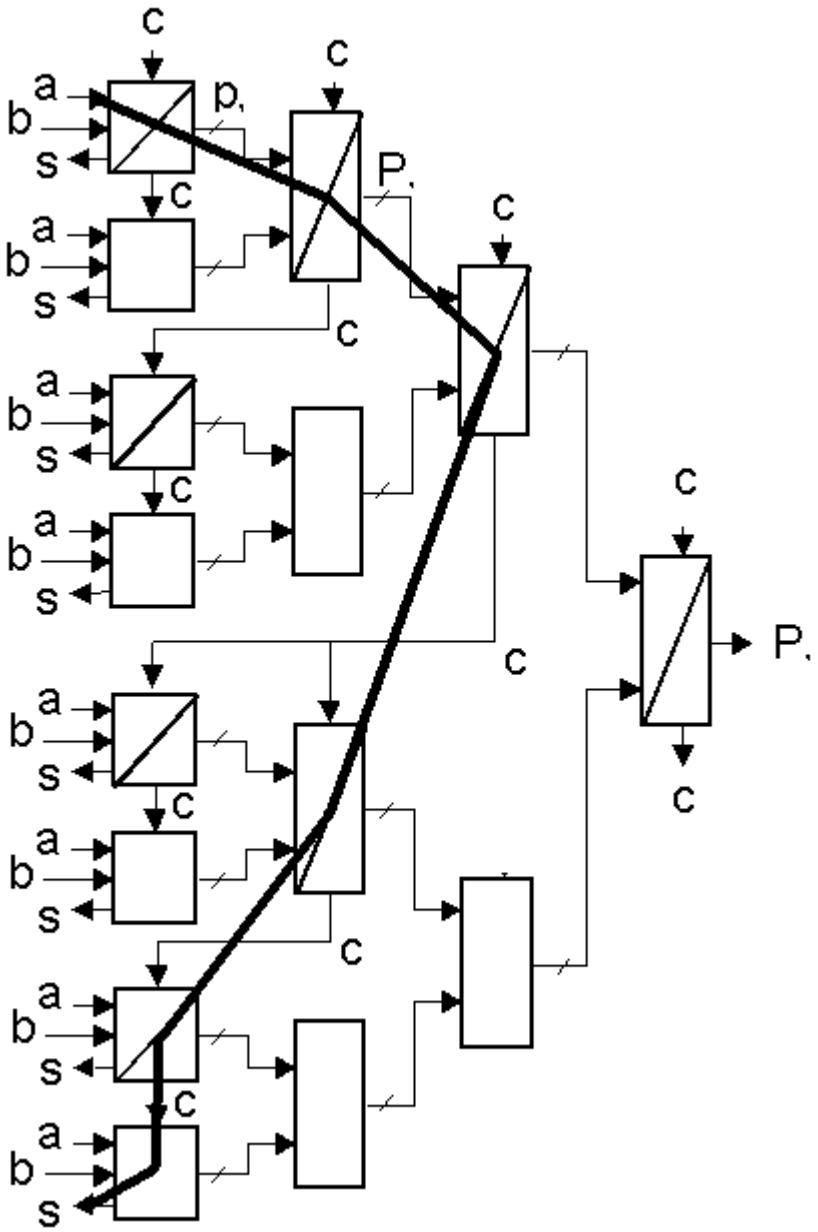

Delay: O(log n)
Cost: O(n)

2)

30 4-LUTs.

3)

a) 3, 4, 5, 6, 7, 7

b) Delay = O(log n)
Cost = O(3 ^ (log n))

4)

	Cost	Delay
Carry-ripple	384	130
Carry-select A	970	40
Carry-select B	5240	31
Carry-propagate	506	34

5)

a) D = 0.05 * r + 0.4 (n / r – 1)

b) d / dr (0.05 * r + 0.4 (n / r – 1)) = 0
0.05 – 0.4 * nr ^ -2 = 0
r ^ 2 = 8n
r = (8n) ^ 0.5

c) n = 64; r = 21, 21, 22
n = 128; r = 32

6)

4-10)

$$O_0 = I_0$$
$$O_1 = I_1 \oplus I_0$$
$$O_2 = I_2 \oplus (I_1 + I_0)$$
$$O_3 = I_3 \oplus (I_2 + I_1 + I_0)$$

$$O_4 = I_4 \oplus (I_3 + I_2 + I_1 + I_0)$$

4-11)

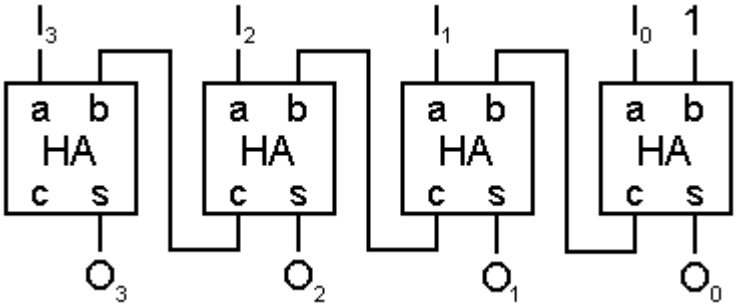

4-13)

a) SUM = 1101 C = 0 V = 1
b) SUM = 0001 C = 1 V = 1
c) SUM = 0100 C = 1 V = 0
d) SUM = 1011 C = 0 V = 1
e) SUM = 1111 C = 0 V = 0

4-15)

$$C_4 = G_3 + P_3C_3$$

4-21)