University of California at Berkeley
College of Engineering
Department of Electrical Engineering and Computer Sciences

EECS150 J. Wawrzynek
Spring 2000 E. Caspi

Homework #8 – Solution

The following solutions are reproduced from the Katz textbook's solutions manual.

3.1

a.)

$$F = AB + CD$$
$$F = \overline{\overline{AB + CD}}$$
$$F = \overline{(\overline{AB}) \bullet (\overline{CD})}$$

b.)

$$F = AB + CD$$
$$F = \overline{\overline{AB + CD}}$$
$$F = \overline{(\overline{AB}) \bullet (\overline{CD})}$$
$$F = \overline{(\overline{A} + \overline{B}) \bullet (\overline{C} + \overline{D})}$$
$$F = \overline{(\overline{A} + \overline{B})} + \overline{(\overline{C} + \overline{D})}$$
$$F = \overline{\overline{(\overline{A} + \overline{B})} + \overline{(\overline{C} + \overline{D})}}$$

c.)

$$F = (A + B) \bullet (C + D)$$
$$F = \overline{\overline{(A + B) \bullet (C + D)}}$$
$$F = \overline{(\overline{A + B}) + (\overline{C + D})}$$

d.)

$$F = (A + B) \bullet (C + D)$$
$$F = \overline{\overline{(A + B) \bullet (C + D)}}$$
$$F = \overline{(\overline{A + B}) + (\overline{C + D})}$$
$$F = \overline{(\overline{A}\,\overline{B}) + (\overline{C}\,\overline{D})}$$
$$F = \overline{\overline{(\overline{A}\,\overline{B}) + (\overline{C}\,\overline{D})}}$$
$$F = \overline{(\overline{\overline{A}\,\overline{B}}) \bullet (\overline{\overline{C}\,\overline{D}})}$$

3.2

a.) $A\overline{B}\,\overline{C} + \overline{A}C + \overline{A}B$

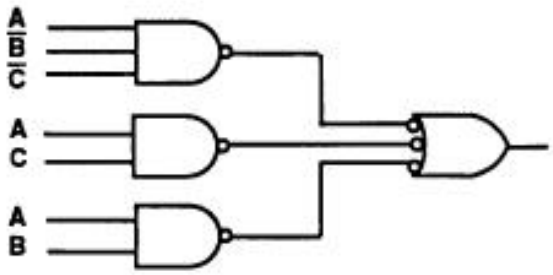

b.) $(\overline{A} + \overline{B} + \overline{C})\,(\overline{A} + \overline{B})\,(\overline{A} + \overline{C})$

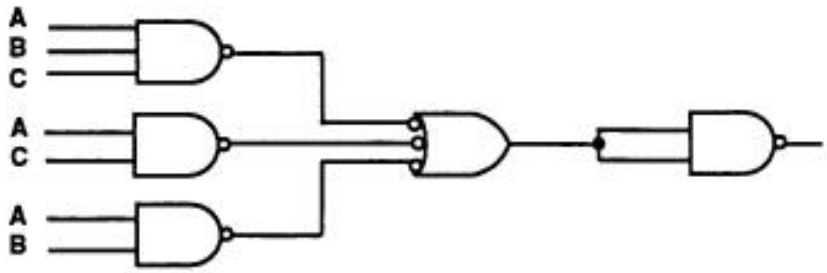

c.) $\overline{A}B + A + \overline{C} + D$

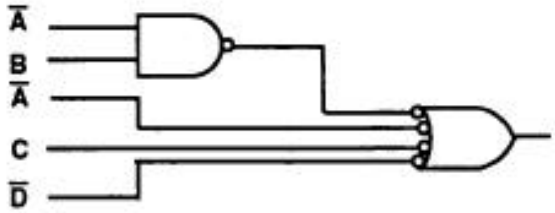

X d.)

$(A\,B)\,\overline{(\overline{A}\,\overline{C})}$

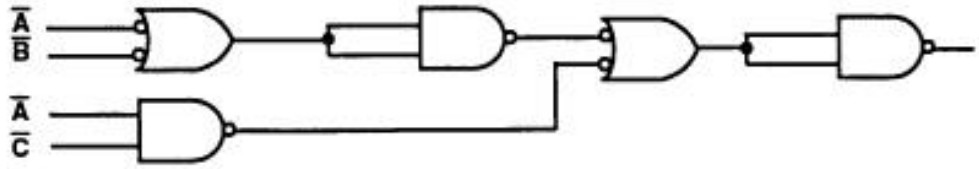

e.)

$\overline{A\,B + \overline{A}\,\overline{C}}$

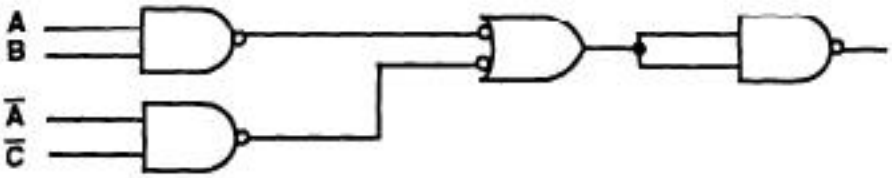

3.3

a.) $(A + B)(\overline{A} + C)$

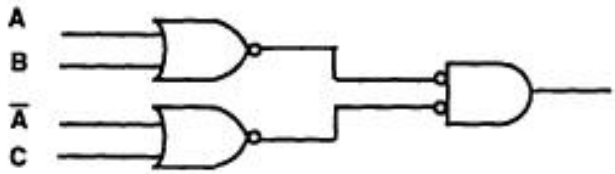

b.)

$\overline{(A + B) \bullet (\overline{A} + C)}$

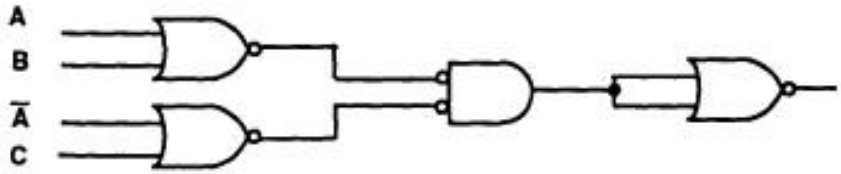

c.)

$\overline{(\overline{A + B})} \bullet \overline{(\overline{A} + C)}$

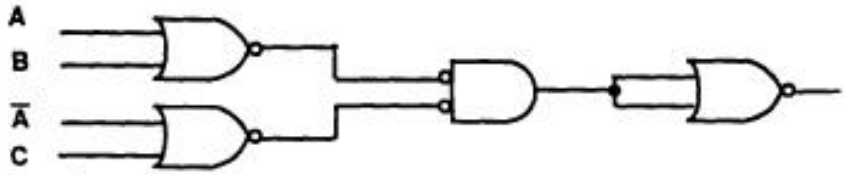

d.) $(A + B) \bullet (\overline{A} + C + D) \bullet (\overline{A} + \overline{C})$

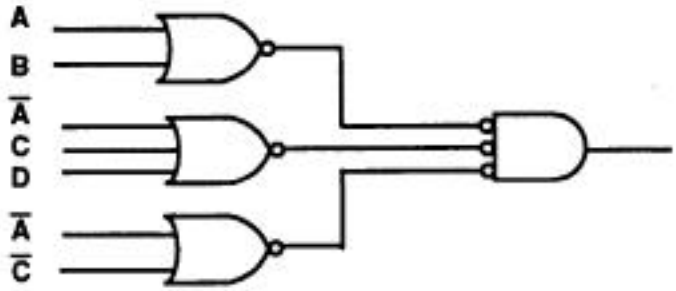

e.) $(A + B) \bullet (\overline{B} \bullet C) \bullet (\overline{A} + \overline{C})$

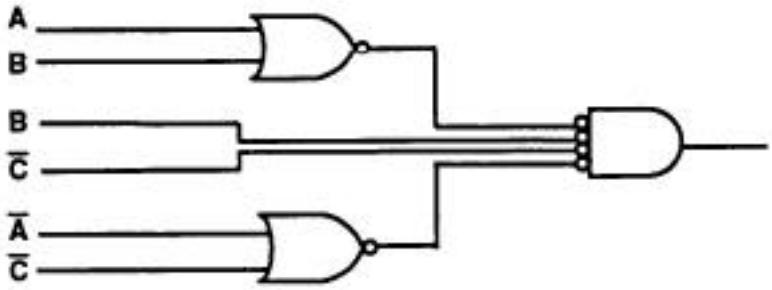

3.4

a.) $(A\,B + C\,D)\,E + F$

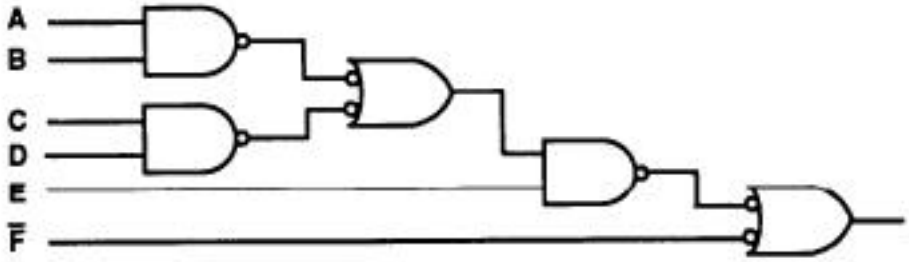

b.) $(A\,B + C)\,E + D\,G$

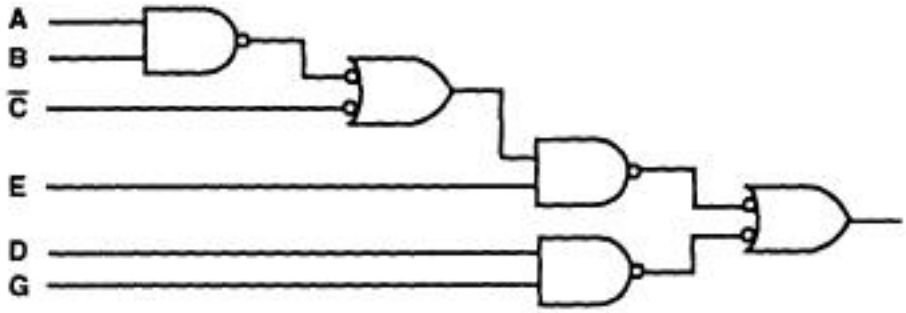

c.) $\{A + [(B + C)(D + E)]\}\{[(F + G)(\overline{B} + \overline{E})] + \overline{A}\}$

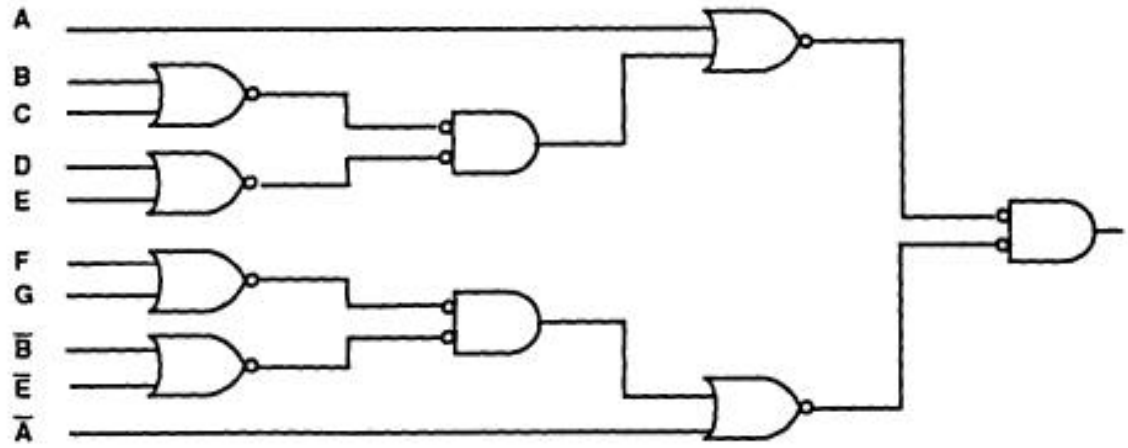

d.) $(A + B)(C + D) + E\,F$

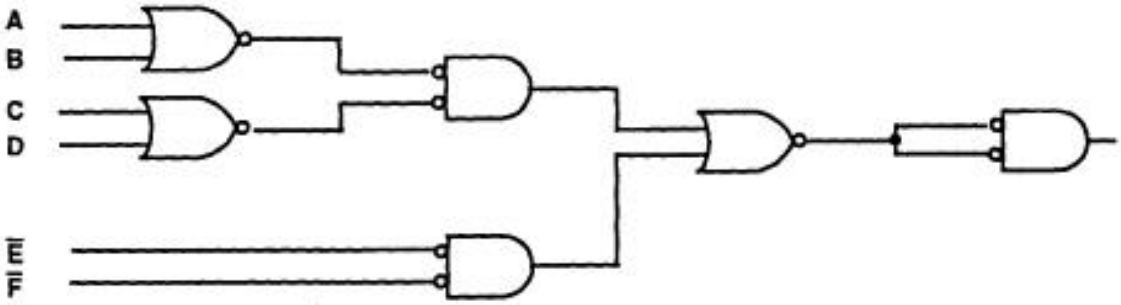

e.) $A\,\overline{B}\,(\overline{B} + C)\,\overline{D} + \overline{A}$

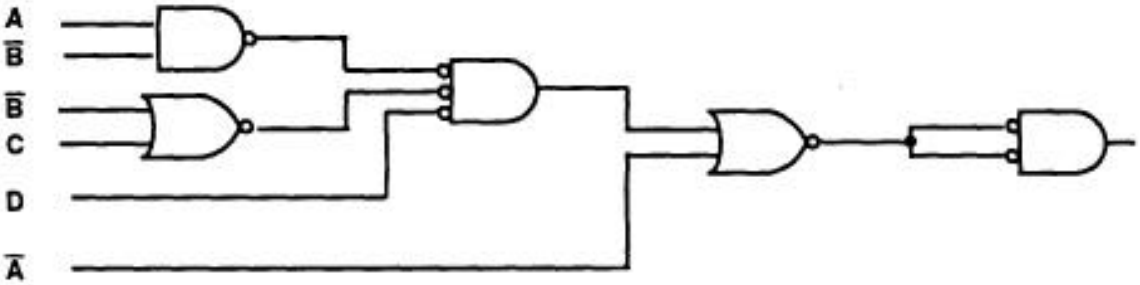

3.5

CD \ AB	00	01	11	10
00	0	0	0	0
01	0	0	1	1
11	0	1	1	1
10	0	1	1	1

a) $\Pi M(0, 1, 2, 3, 4, 5, 8, 12)$

b) $F = (A + B)(C + D)(A + C)$

c) $F = (\overline{A} + \overline{D})(\overline{A} + \overline{C})(\overline{B} + \overline{C})$

d) $F = \overline{A}\,\overline{B} + \overline{C}\,\overline{D} + \overline{A}\,\overline{C}$

e.)

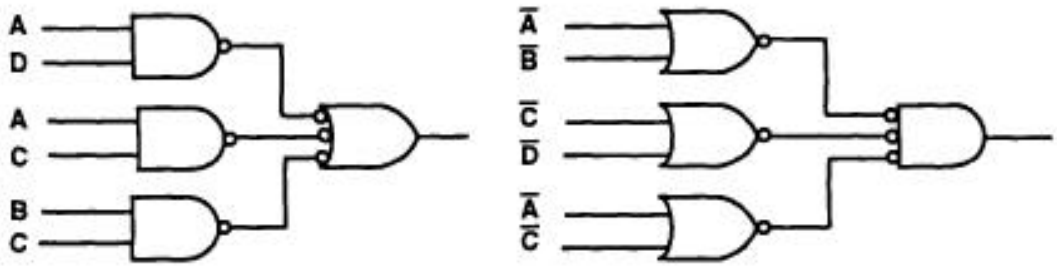

f.)

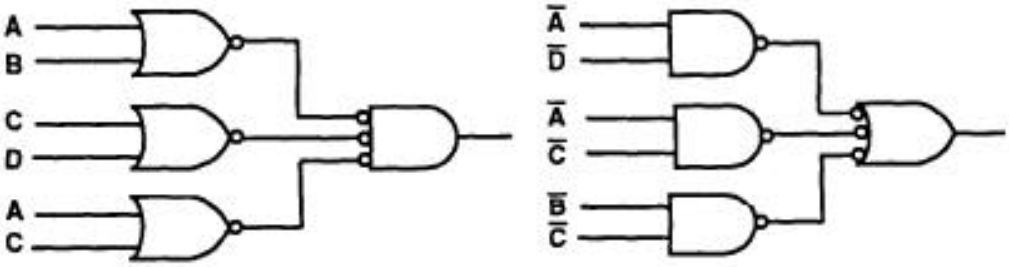

3.8

a.) $A\,B\,C\,D + A\,B\,D\,E$
$= A\,B\,D(C + E)$

b.) $A\,C\,D + B\,C + A\,B\,E + B\,D$
$= A\,(C\,D + B\,D) + B\,(C + D)$

3.9

$$\overline{A}\,(A + B)\,\overline{B}\,(A + B)$$
$$= (A + B)\,(\overline{A} + \overline{B})$$
$$= \overline{A}\,B + \overline{B}\,A$$
$$= A \oplus B$$

3.10

$$SUM = A\,\overline{C}_{out} + B\,\overline{C}_{out} + C_{in}\,\overline{C}_{out} + A\,B\,C_{in}$$

$$C_{out} = A\,B + A\,C_{in} + B\,C_{in}$$

A	B	C_{in}	SUM	C_{out}
0	0	0	0	0
0	0	1	1	0
0	1	0	1	0
0	1	1	0	1
1	0	0	1	0
1	0	1	0	1
1	1	0	0	1
1	1	1	1	1

5.9

$$D = A - B$$

A B Br	D Bl
0 0 0	0 1
0 0 1	1 1
0 1 0	1 1
0 1 1	0 1
1 0 0	1 0
1 0 1	0 0
1 1 0	0 0
1 1 1	1 1

a.)

$$D = A \underline{x}or\ B\ xor\ \underline{B}r$$
$$Bl = A\overline{B} + ABr + \overline{B}Br$$

b.)

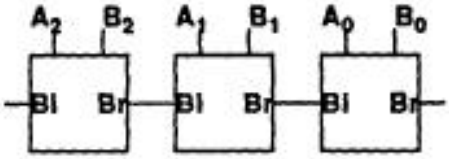

c.)

The subtractor works correctly for 2s complement numbers.

d.)

Underflow is indicated if the MSB attempts to borrow.

5.12 Remainder function: $R_1R_0 = D_2D_1D_0 \bmod C_1C_0$.

(a) We begin by writing the truth table, noting the following simplifications:

- (anything) mod 0 = X (don't care)
- (anything) mod 1 = 0
- 0 mod (anything) = 0

D_2	D_1	D_0	C_1	C_0	R_1	R_0	
0	0	0	0	0	X	X	0mod0 = X
0	0	0	0	1	0	0	0mod1 = 0
0	0	0	1	0	0	0	0mod2 = 0
0	0	0	1	1	0	0	0mod3 = 0
0	0	1	0	0	X	X	1mod0 = X
0	0	1	0	1	0	0	1mod1 = 0
0	0	1	1	0	0	1	1mod2 = 1
0	0	1	1	1	0	1	1mod3 = 1
0	1	0	0	0	X	X	2mod0 = X
0	1	0	0	1	0	0	2mod1 = 0
0	1	0	1	0	0	0	2mod2 = 0
0	1	0	1	1	1	0	2mod3 = 2
0	1	1	0	0	X	X	3mod0 = X
0	1	1	0	1	0	0	3mod1 = 0
0	1	1	1	0	0	1	3mod2 = 1
0	1	1	1	1	0	0	3mod3 = 0
1	0	0	0	0	X	X	4mod0 = X
1	0	0	0	1	0	0	4mod1 = 0
1	0	0	1	0	0	0	4mod2 = 0
1	0	0	1	1	0	1	4mod3 = 1
1	0	1	0	0	X	X	5mod0 = X
1	0	1	0	1	0	0	5mod1 = 0
1	0	1	1	0	0	1	5mod2 = 1
1	0	1	1	1	1	0	5mod3 = 2
1	1	0	0	0	X	X	6mod0 = X
1	1	0	0	1	0	0	6mod1 = 0
1	1	0	1	0	0	0	6mod2 = 0
1	1	0	1	1	0	0	6mod3 = 0
1	1	1	0	0	X	X	7mod0 = X
1	1	1	0	1	0	0	7mod1 = 0
1	1	1	1	0	0	1	7mod2 = 1
1	1	1	1	1	0	1	7mod3 = 1

(b) 5-Variable Karnaugh maps for R_1 and R_0:

R_1 (D_2=0)

D_1D_0 \ C_1C_0	00	01	11	10
00	X	0	0	0
01	X	0	0	0
11	X	0	0	0
10	X	0	1	0

R_1 (D_2=1)

D_1D_0 \ C_1C_0	00	01	11	10
00	X	0	0	0
01	X	0	1	0
11	X	0	0	0
10	X	0	0	0

R_0 (D_2=0)

D_1D_0 \ C_1C_0	00	01	11	10
00	X	0	0	0
01	X	0	1	1
11	X	0	0	1
10	X	0	0	0

R_0 (D_2=1)

D_1D_0 \ C_1C_0	00	01	11	10
00	X	0	1	0
01	X	0	0	1
11	X	0	1	1
10	X	0	0	0

Simplified expressions:

$R_1 = D_2'D_1D_0'C_1C_0 + D_2D_1'D_0C_1C_0$

$R_0 = D_0C_0' + D_2'D_1'D_0C_1 + D_2D_1D_0C_1$
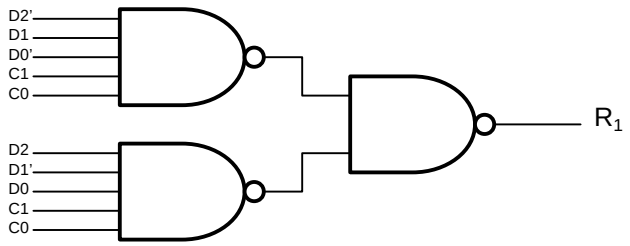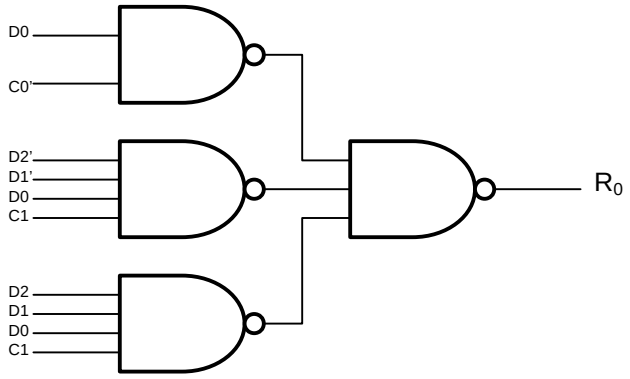
(c) Converting the AND-OR network to NAND-NAND: