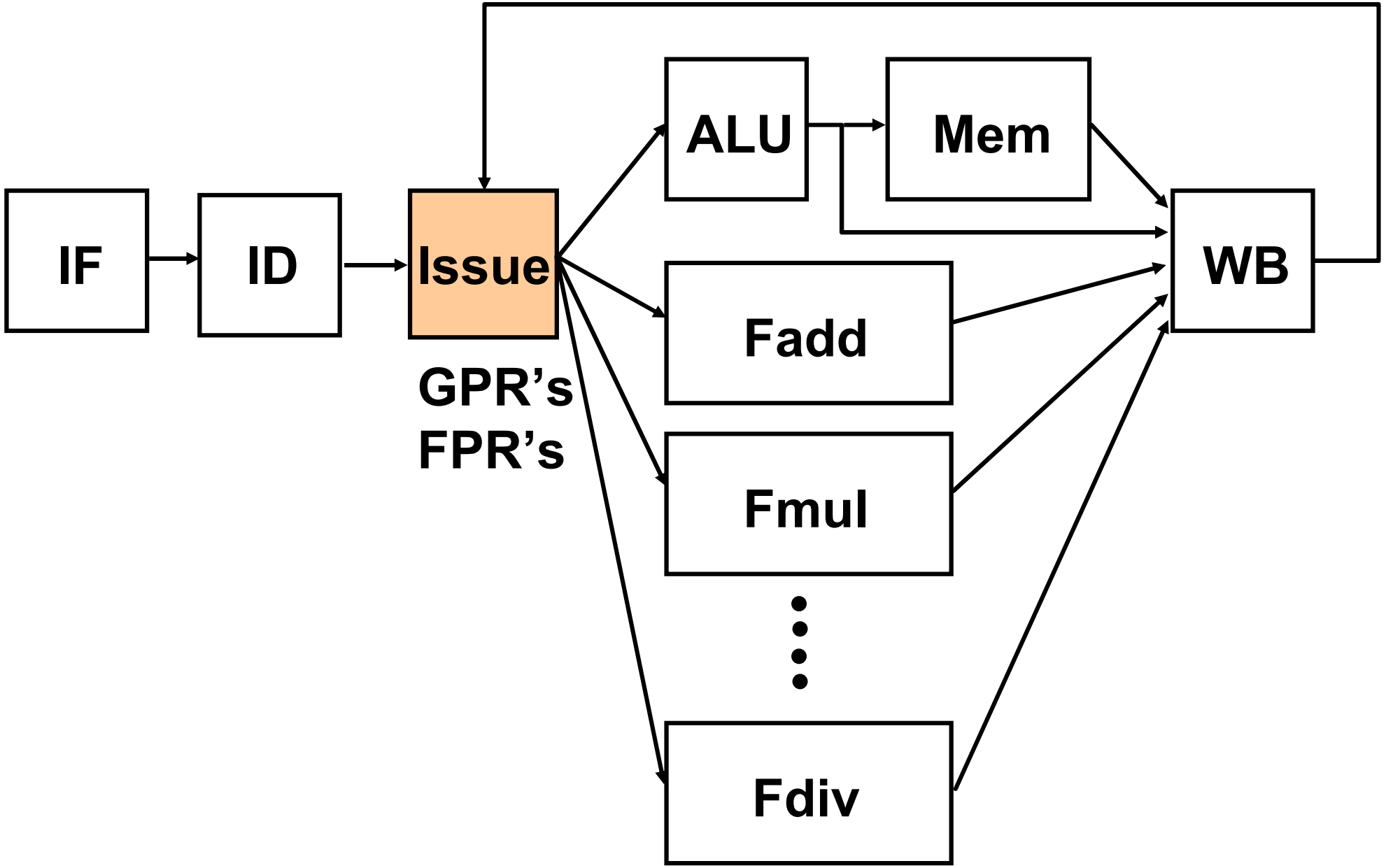
IF
ID
Issue
GPR's
FPR's
ALU
Mem
Fadd
Fmul
Fdiv
WB