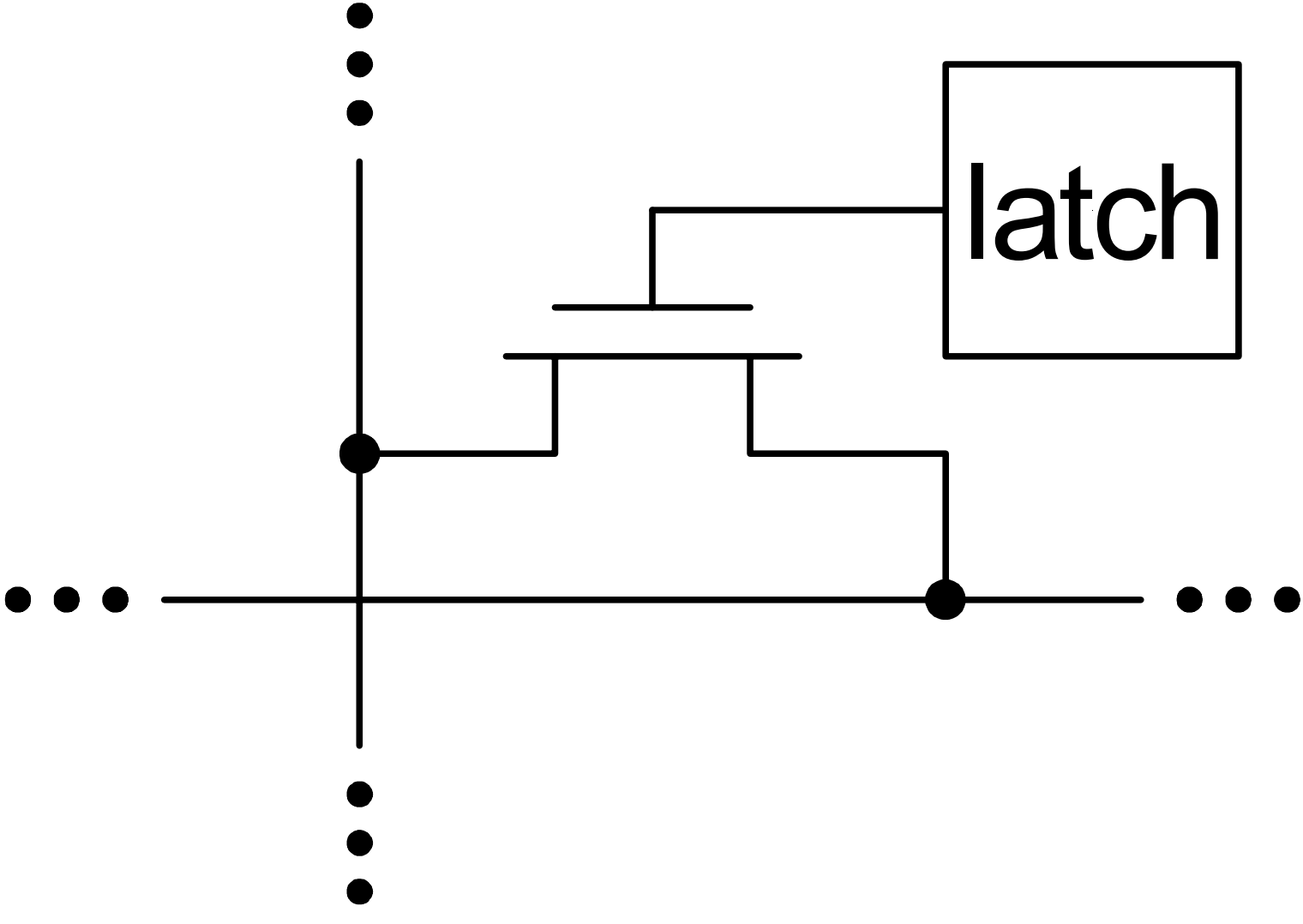
latch