CS 152 Computer Architecture and Engineering

Lecture 24: The Future and Closing Remarks

John Wawrzynek

http://inst.eecs.berkeley.edu/~cs152

Future Application Drivers

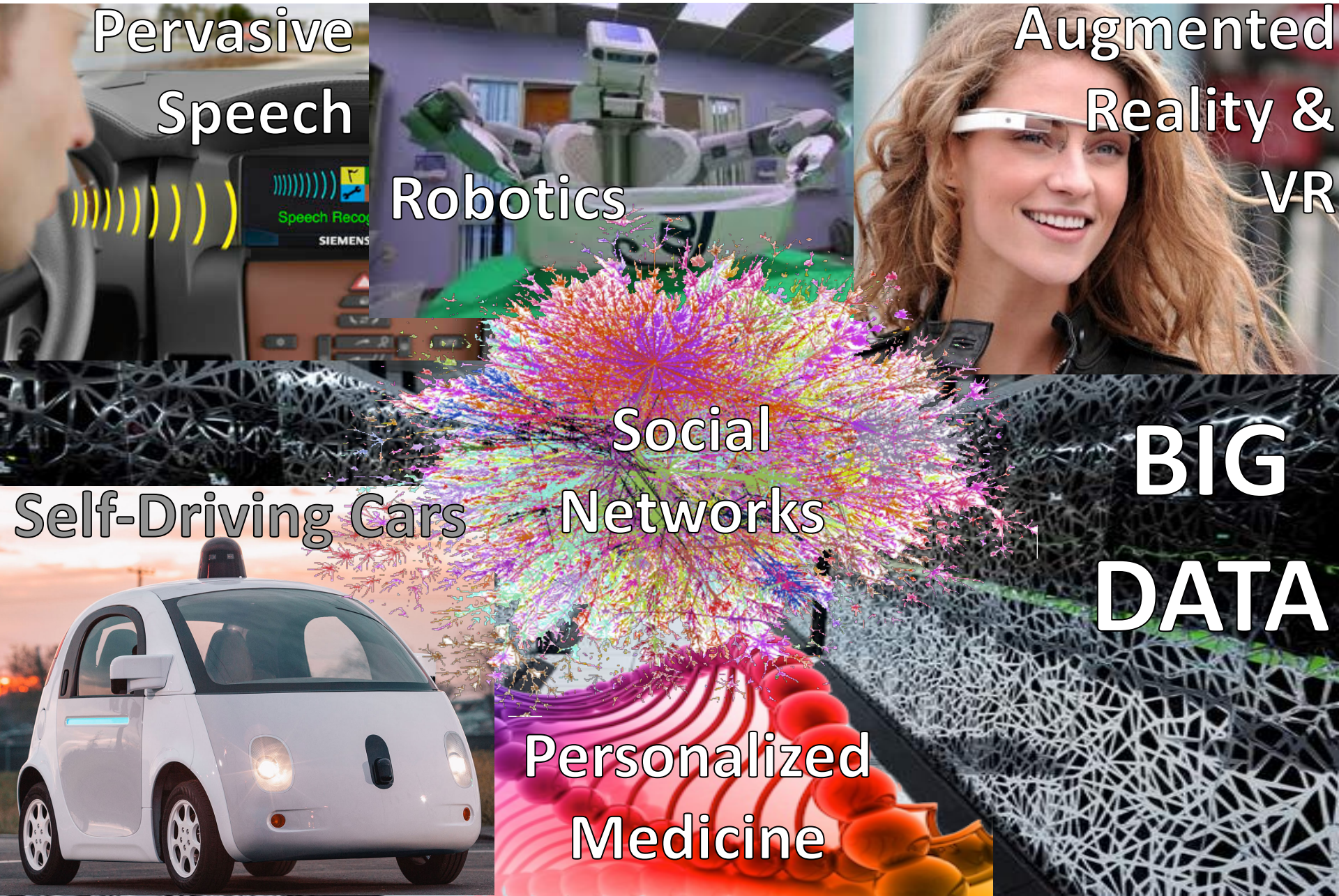

Compute Energy "Iron Law"

Performance = Power * Energy Efficiency

(Tasks/Second) (Joules/Second) (Tasks/Joule)

- When power is constrained, need better energy efficiency for more performance
- Where performance is constrained (real-time), want better energy efficiency to lower power

Improving energy efficiency is critical goal for all future systems and workloads

Good News: Moore's Law Continues

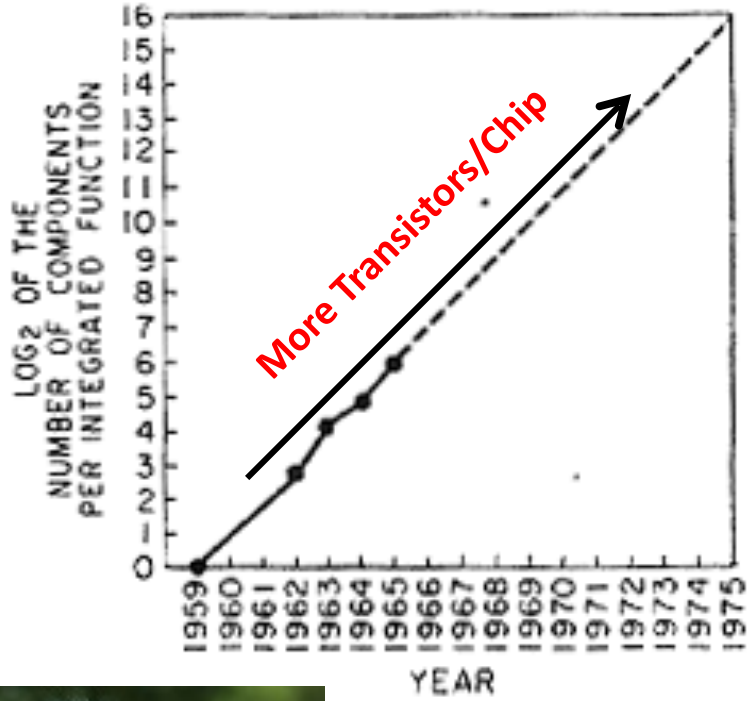

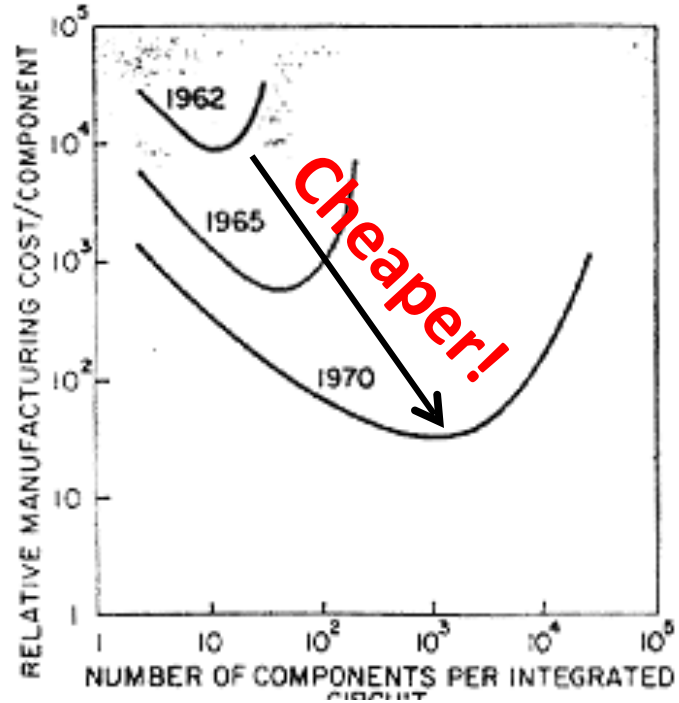

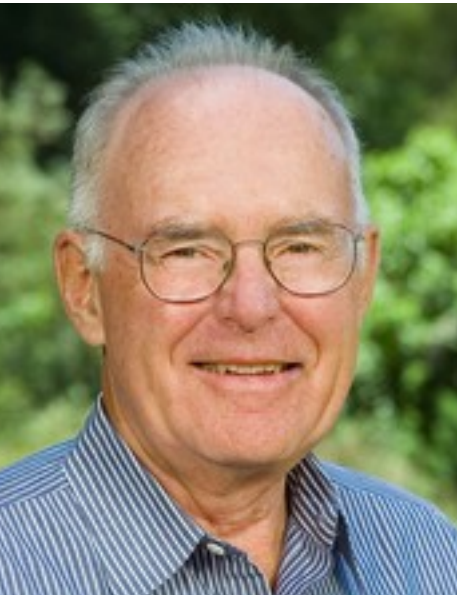

"Cramming more components onto integrated circuits", Gordon E. Moore, Electronics, 1965

Bad News:
Dennard (Voltage) Scaling Over

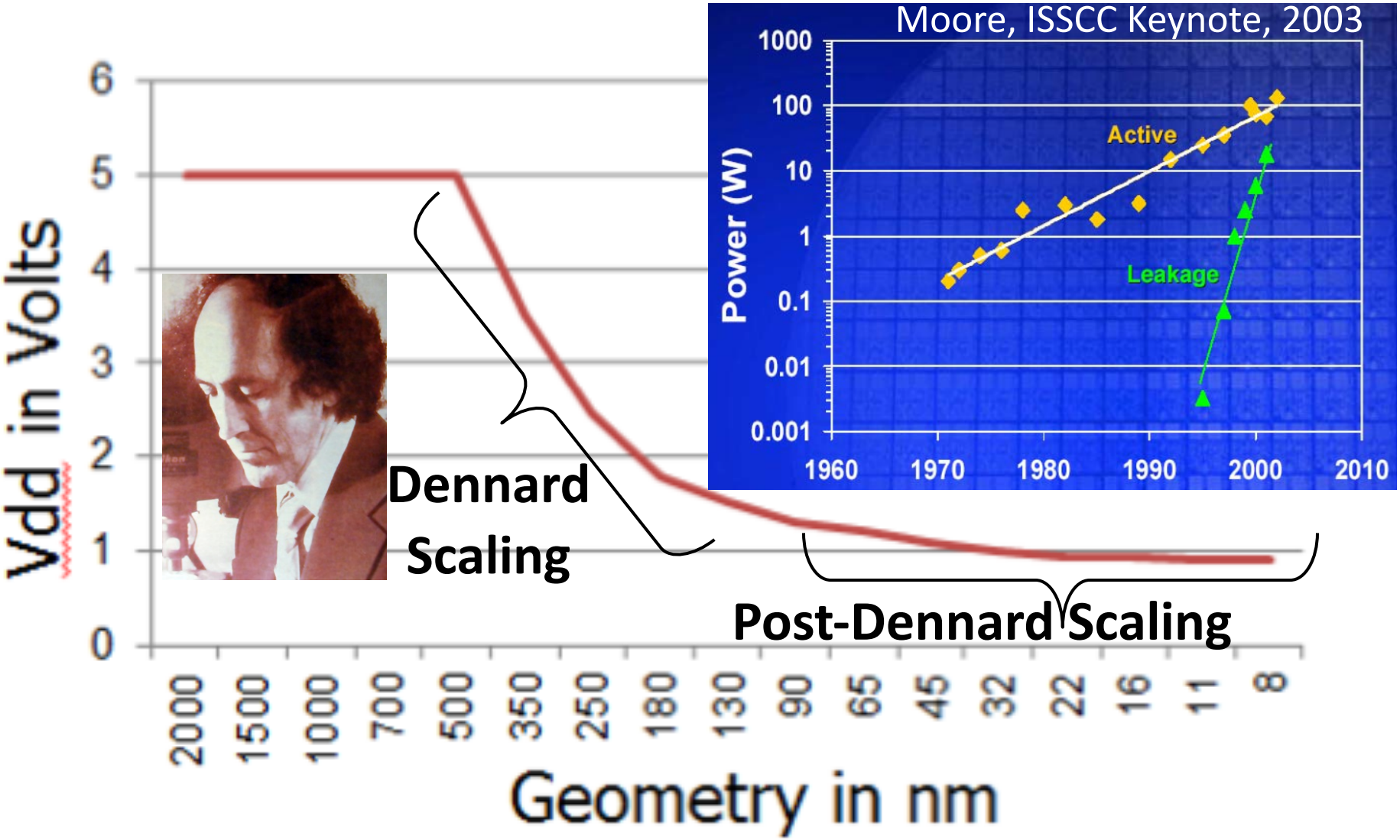

Data courtesy S. Borkar/Intel 2011

1st Impact of End of Scaling:
End of Sequential Processor Era

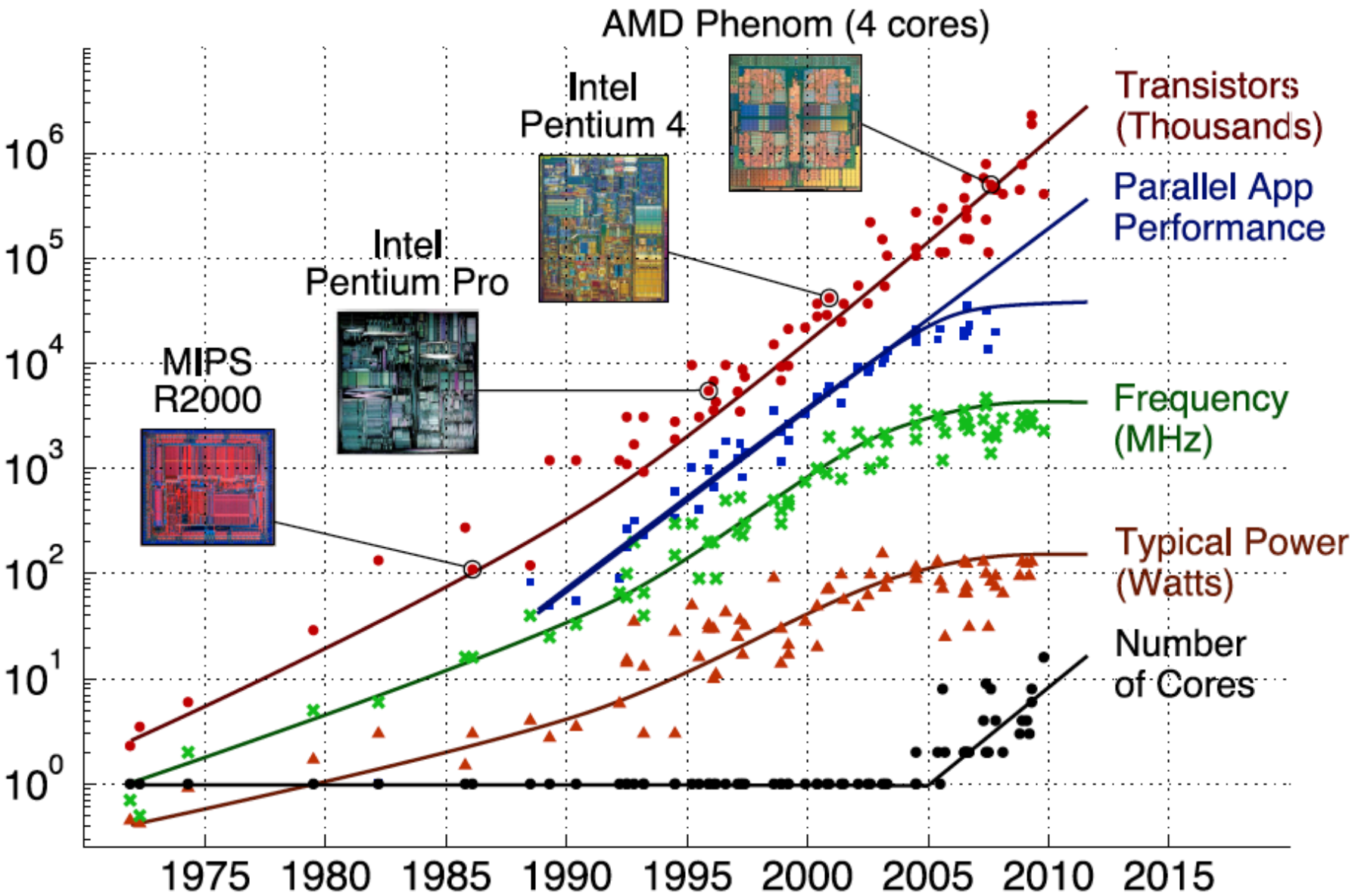

Data partially collected by M. Horowitz, F. Labonte, O. Shacham, K. Olukotun, L. Hammond

Parallelism: “A one-time gain” (limited, at least)

Use more, slower cores for better energy efficiency.

Either

- simpler cores, or
- run cores at lower Vdd/frequency

- Even simpler general-purpose microarchitectures?
  - Limited by smallest sensible core
- Even Lower Vdd/Frequency?
  - Limited by Vdd/Vt scaling, errors
- Now what?

2nd Impact of End of Scaling: *"Dark Silicon"*
Cannot switch all transistors at full frequency!

Node	45nm	22nm	11nm
Year	2008	2014	2020
Area^{-1}	1	4	16
Peak freq	1	1.6	2.4
Power	1	1	0.6
		$(4 \times 1)^{-1} = 25\%$	$(16 \times 0.6)^{-1} = 10\%$
Exploitable Si (in 45nm power budget)		25%	10%

Source: ITRS 2008

[Muller, ARM CTO, 2009]

No savior device technology on horizon.

Future energy-efficiency innovations must be above transistor level.

The Problem With Programmability

- [Cong, 2014]. This is power breakdown for a superscalar out-of-order processor, typically configured

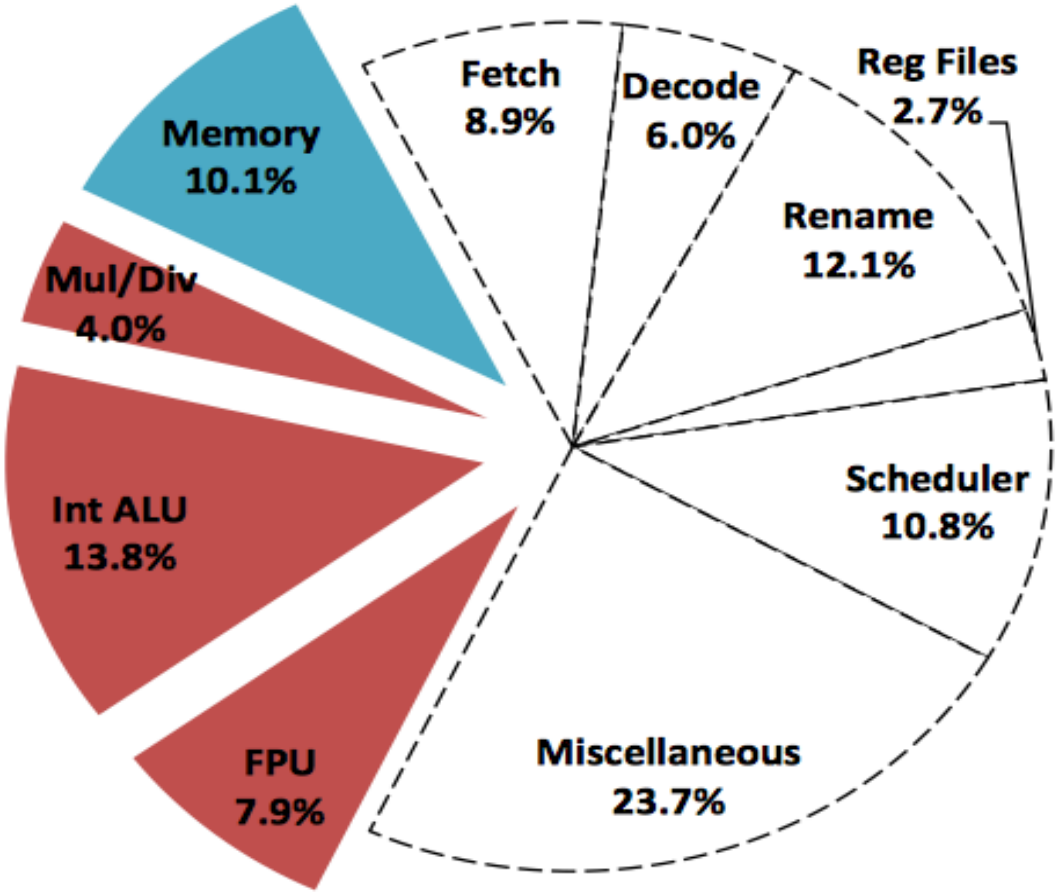

Accelerators

- Specialized hardware that is fixed function
  - One application
  - Or one function common to many applications (e.g., FFT)

```
typedef unsigned long U32;

U32 cyclic_mac(U32 *p1, U32 *p2)
{
   U32 sum = 0;
   int i;

   for(i = 0; i < BUF_SIZE*4; ++i)
   {
      sum += *p1++ * *p2++;

      if((i % BUF_SIZE) == (BUF_SIZE - 1))
      {
         p1 -= BUF_SIZE;
      }
   }

   return sum;
}
```

```
; Enabling modulo addressing for r0
lbf 0x1, moduen
; Setting modulo factor for r0
lbf 64, modi

; Loop prologue
mpy      (r0).dw+1, (r1).dw+1
mpypa  (r0).dw+1, (r1).dw+1, a0

rep        127
; Loop body
mac      (r0).dw+1, (r1).dw+1, a0

ret{ds1, t}
; Disabling modulo addressing for r0
lbf 0x0, moduen
```

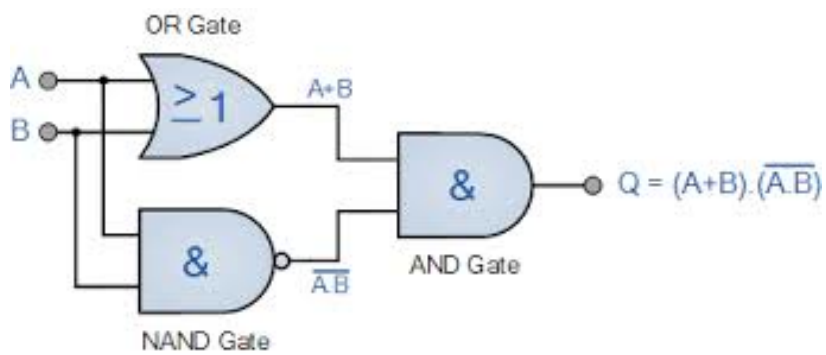

The End of General-Purpose Processors?

- Most computing happens in specialized, heterogeneous processors
  - Can be 100-1000X more efficient than general-purpose processor
- Challenges:
  - Hardware design costs
  - Software development costs

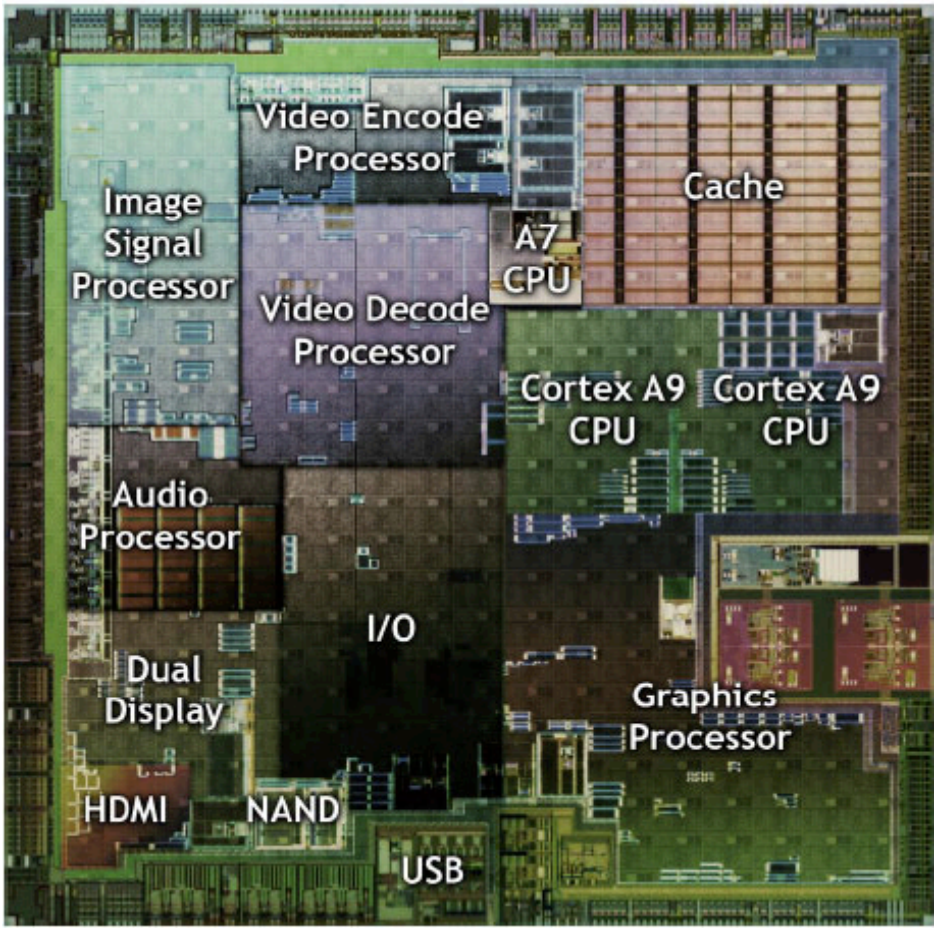

NVIDIA Tegra2

Related Courses

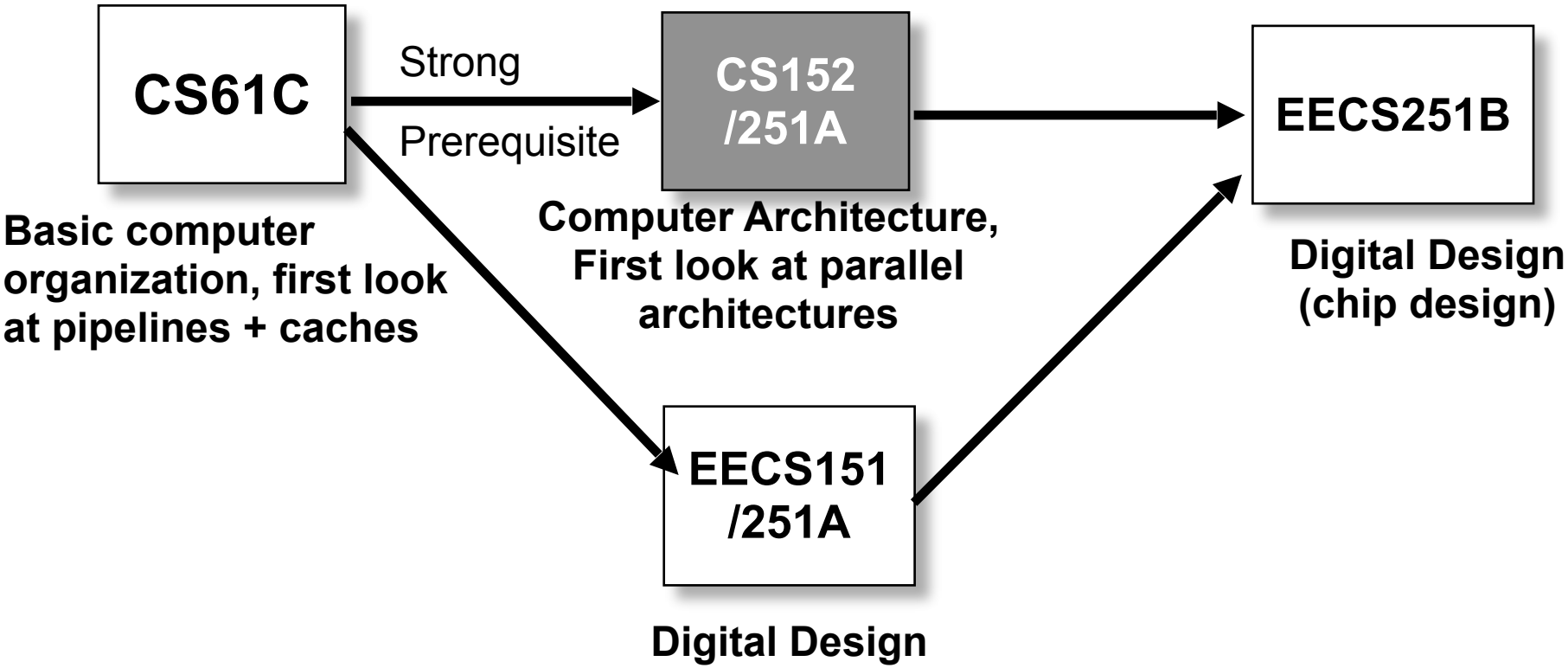

- CS 162. Operating Systems and System Programming
- CS 168. Introduction to the Internet: Architecture and Protocols
- CS 161. Computer Security, EE 122. Introduction to Communication Networks

Computer Architecture

- EE 130. Integrated-Circuit Devices
- EE C149. Introduction to Embedded Systems
- EE 140. Analog Integrated Circuits

End of CS152/252A

- Make sure to do class evaluation
- Thanks for taking the class!
- Best of luck on the final exam.