CS162
Operating Systems and Systems Programming
Lecture 2

Four fundamental OS concepts

August 31st, 2020

Prof. Ion Stoica

http://cs162.eecs.Berkeley.edu

Recall: What is an operating system?

- Special layer of software that provides application software access to hardware resources
  - Convenient abstraction of complex hardware devices
  - Protected access to shared resources
  - Security and authentication
  - Communication amongst logical entities

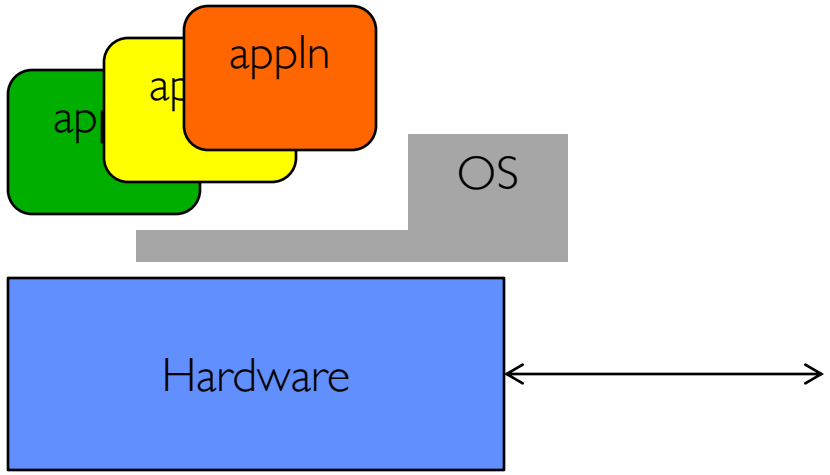

What is an Operating System?

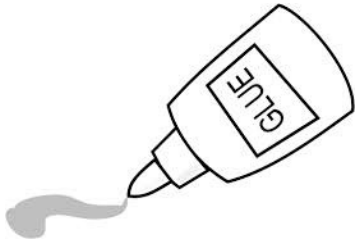

- Referee
  - Manage protection, isolation, and sharing of resources
    - » Resource allocation and communication
- Illusionist
  - Provide clean, easy-to-use abstractions of physical resources
    - » Infinite memory, dedicated machine
    - » Higher level objects: files, users, messages
    - » Masking limitations, virtualization
- Glue
  - Common services
    - » Storage, Window system, Networking
    - » Sharing, Authorization
    - » Look and feel

Very Brief History of OS

- Several Distinct Phases:

Very Brief History of OS

- Several Distinct Phases:
  - Hardware Expensive, Humans Cheap
    - » Eniac, … Multics

"I think there is a world market for maybe five computers." – *Thomas Watson, chairman of IBM, 1943*

Very Brief History of OS

- Several Distinct Phases:
  - Hardware Expensive, Humans Cheap
    - » Eniac, … Multics

Thomas Watson was often called "the worlds greatest salesman" by the time of his death in 1956

Very Brief History of OS

- Several Distinct Phases:
  - Hardware Expensive, Humans Cheap
    - » Eniac, … Multics
  - Hardware Cheaper, Humans Expensive
    - » PCs, Workstations, Rise of GUIs

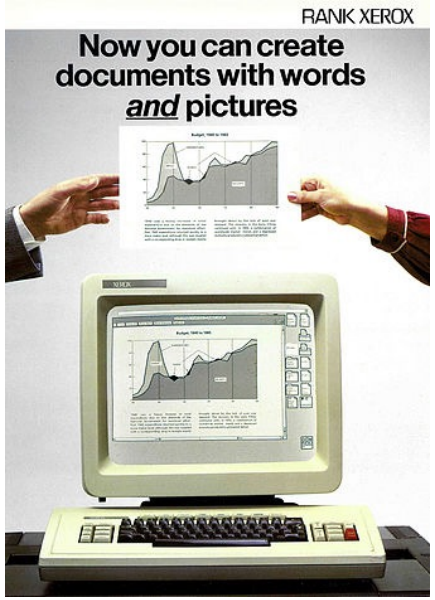

Very Brief History of OS

- Several Distinct Phases:
  - Hardware Expensive, Humans Cheap
    - » Eniac, … Multics
  - Hardware Cheaper, Humans Expensive
    - » PCs, Workstations, Rise of GUIs
  - Hardware Really Cheap, Humans Really Expensive
    - » Ubiquitous devices, widespread networking

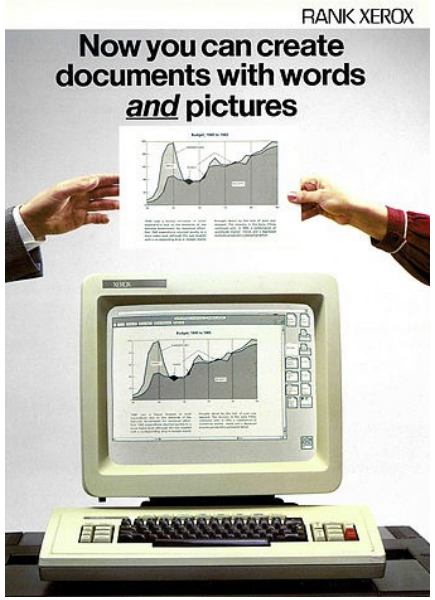

Very Brief History of OS

- Several Distinct Phases:
  - Hardware Expensive, Humans Cheap
    - » Eniac, … Multics
  - Hardware Cheaper, Humans Expensive
    - » PCs, Workstations, Rise of GUIs
  - Hardware Really Cheap, Humans Really Expensive
    - » Ubiquitous devices, widespread networking

- Rapid change in hardware leads to changing OS
  - Batch ⇒ Multiprogramming ⇒ Timesharing ⇒ Graphical UI ⇒ Ubiquitous Devices
  - Gradual migration of features into smaller machines

- Today
  - Small OS: 100K lines / Large: 10M lines (5M browser!)
  - 100-1000 people-years

OS Archaeology

- Because of the cost of developing an OS from scratch, most modern OSes have a long lineage…
- Multics → AT&T Unix → BSD Unix → Ultrix, SunOS, NetBSD,…
- Mach (micro-kernel) + Unix BSD → NextStep → XNU → Apple OS X, iPhone iOS
- MINIX → Linux → Android OS, Chrome OS, RedHat, Ubuntu, Fedora, Debian, Suse,…
- CP/M → QDOS → MS-DOS → Windows 3.1 → NT → 95 → 98 → 2000 → XP → Vista → 7 → 8 → 10 → …

Migration of OS Concepts and Features

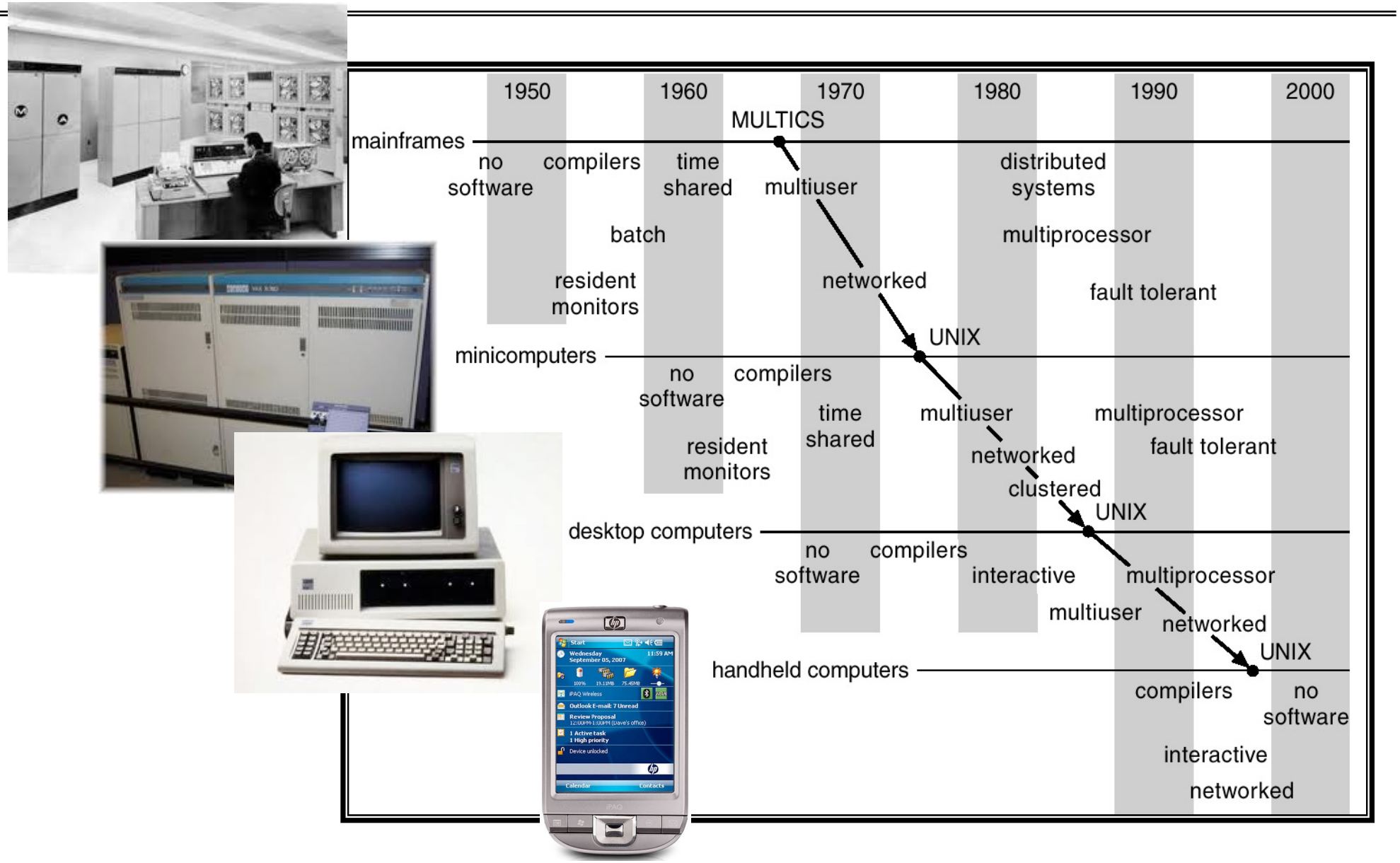

Today: Four Fundamental OS Concepts

- Thread
  - Single unique execution context: fully describes program state
  - Program Counter, Registers, Execution Flags, Stack
- Address space (with **translation**)
  - Programs execute in an *address space* that is distinct from the memory space of the physical machine
- Process
  - An instance of an executing program is *a process consisting of an address space and one or more threads of control*
- Dual mode operation / Protection
  - Only the "system" has the ability to access certain resources
  - The OS and the hardware are protected from user programs and user programs are isolated from one another by *controlling the translation* from program virtual addresses to machine physical addresses

OS Bottom Line: Run Programs

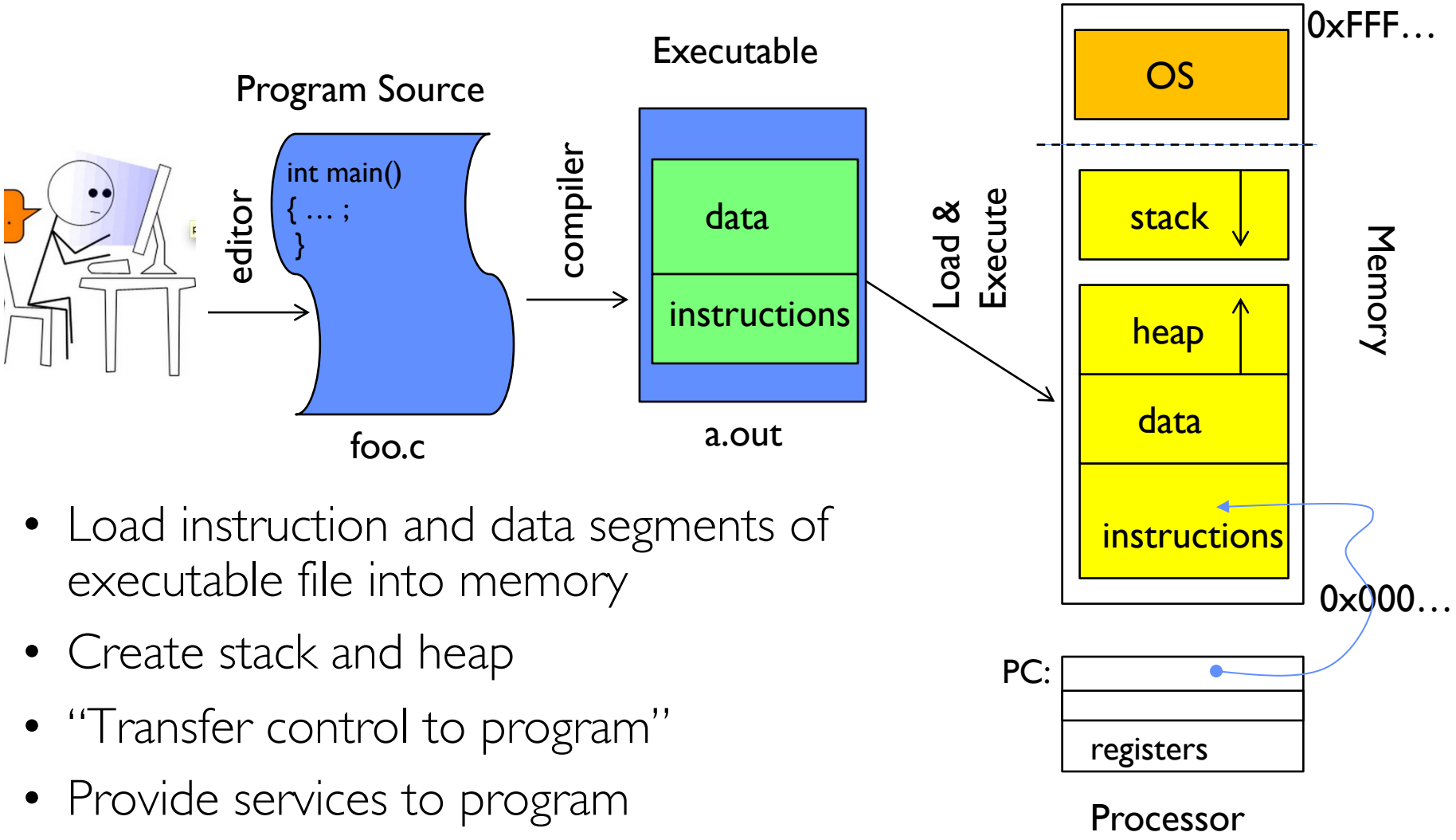

- Load instruction and data segments of executable file into memory
- Create stack and heap
- "Transfer control to program"
- Provide services to program
- While protecting OS and program

Recall (61B): Instruction Fetch/Decode/Execute

The instruction cycle

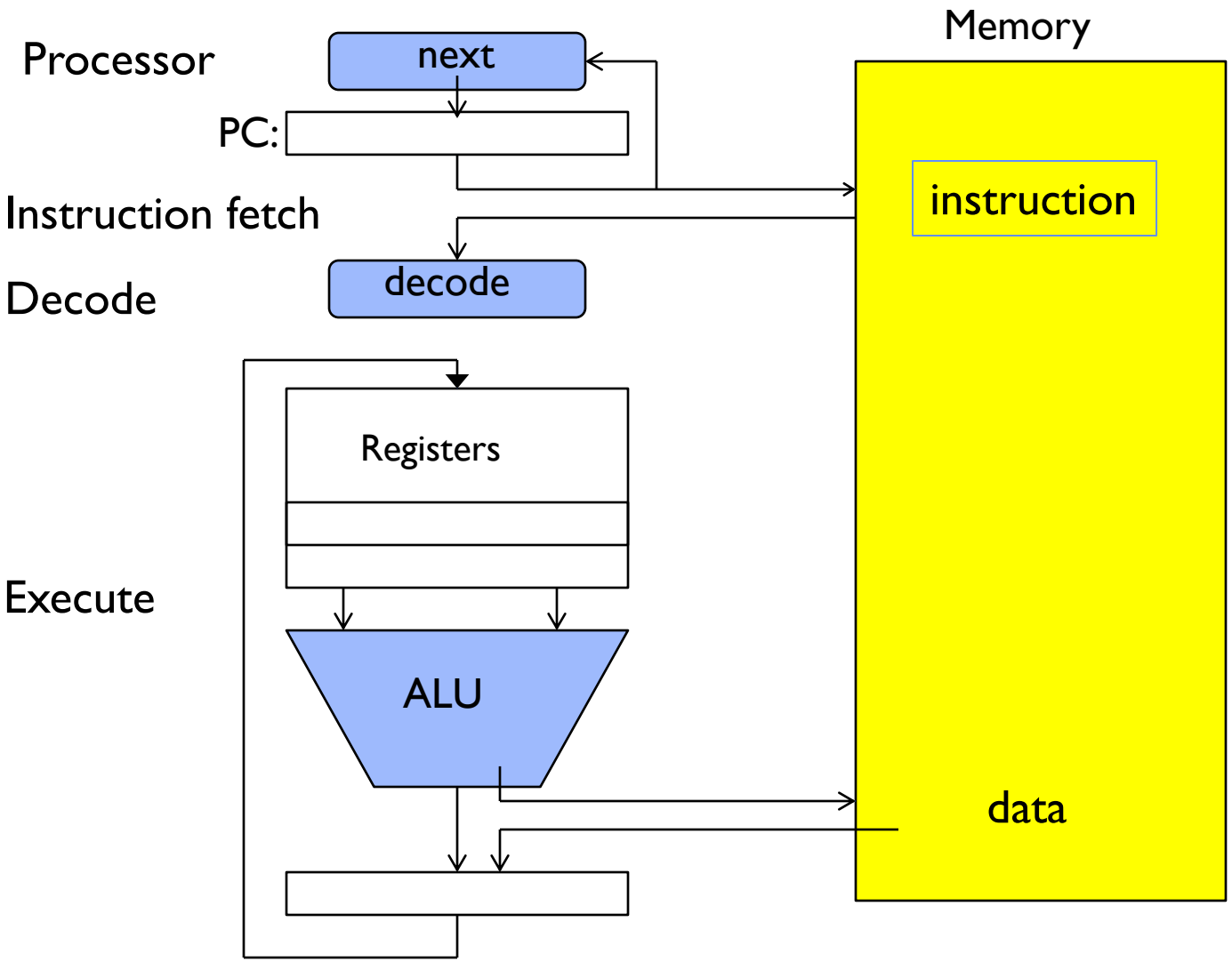

Recall (61C): What happens during program execution?

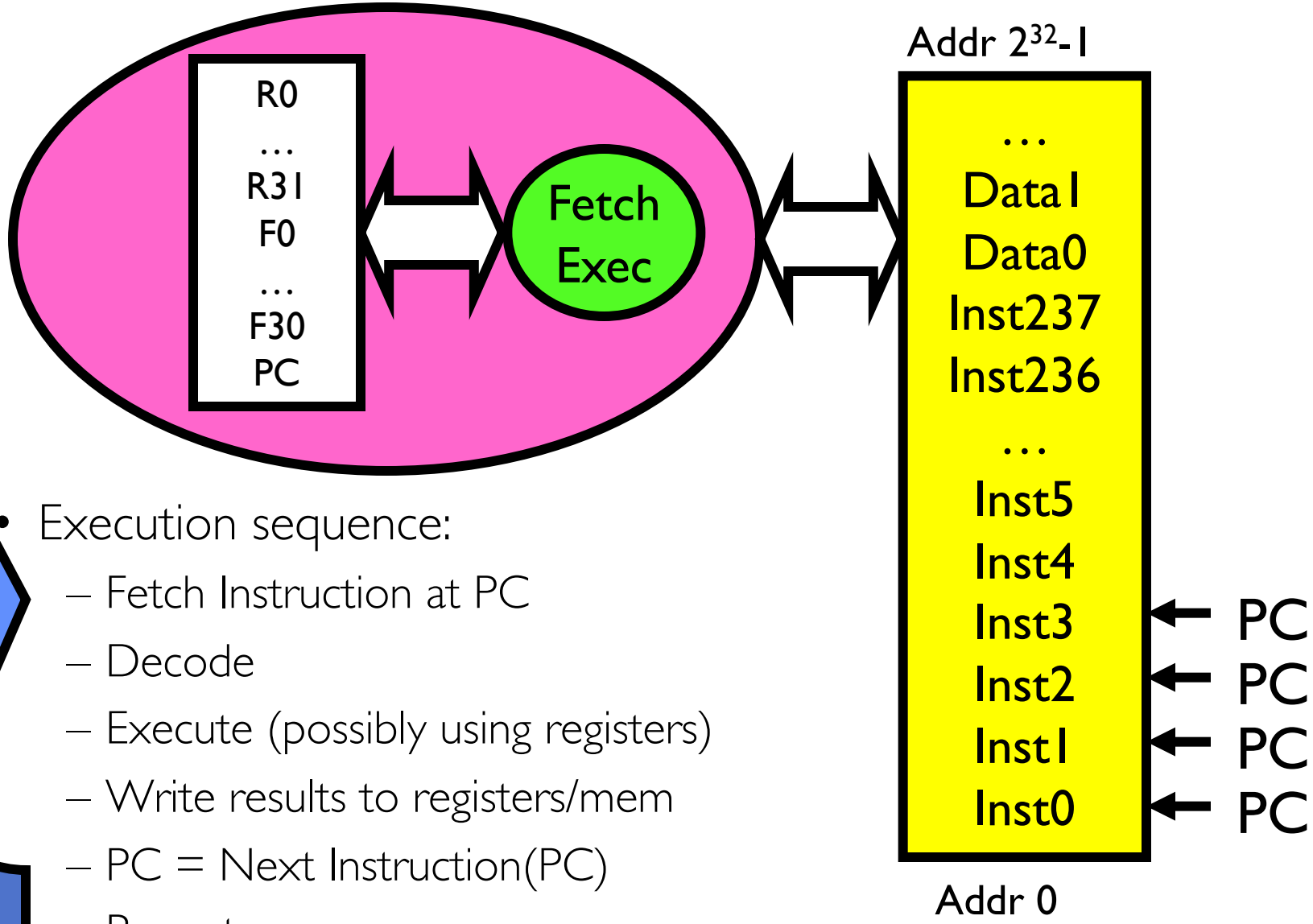

- Execution sequence:
  - Fetch Instruction at PC
  - Decode
  - Execute (possibly using registers)
  - Write results to registers/mem
  - PC = Next Instruction(PC)
  - Repeat

First OS Concept: Thread of Control

- Certain registers hold the *context* of thread
  - Stack pointer holds the address of the top of stack
    - » Other conventions: Frame pointer, Heap pointer, Data
  - May be defined by the instruction set architecture or by compiler conventions
- **Thread**: Single unique execution context
  - Program Counter, Registers, Execution Flags, Stack
- A thread is executing on a processor when it is resident in the processor registers
- PC register holds the address of executing instruction in the thread
- Registers hold the root state of the thread.
  - The rest is "in memory"

Second OS Concept: Program's Address Space

- Address space ⇒ the set of accessible addresses + state associated with them:
  - For a 32-bit processor there are $2^{32} = 4$ billion addresses

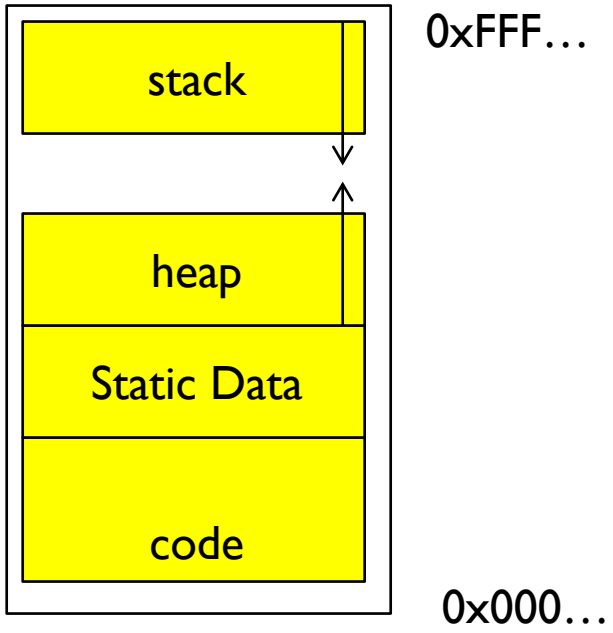

- What happens when you read or write to an address?
  - Perhaps nothing
  - Perhaps acts like regular memory
  - Perhaps ignores writes
  - Perhaps causes I/O operation
    - » (Memory-mapped I/O)
  - Perhaps causes exception (fault)

Address Space: In a Picture

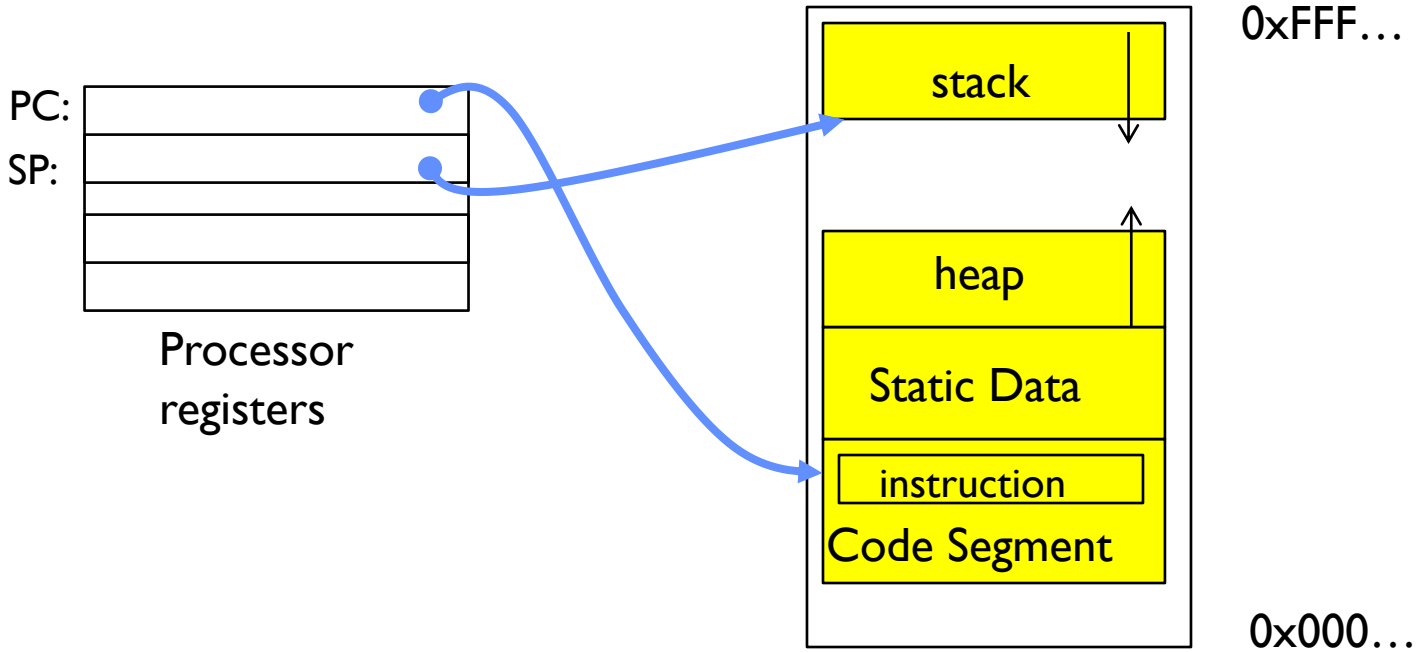

- What's in the code segment? Static data segment?
- What's in the Stack Segment?
  - How is it allocated? How big is it?
- What's in the Heap Segment?
  - How is it allocated? How big?

Multiprogramming - Multiple Threads of Control

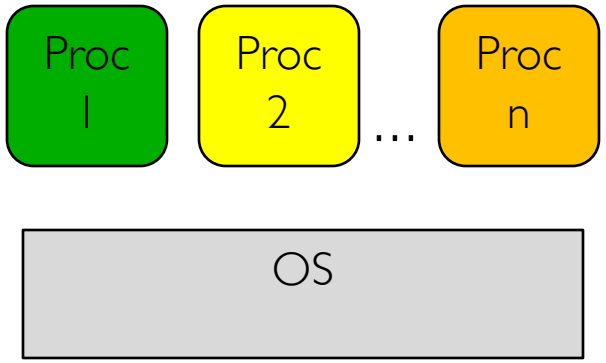

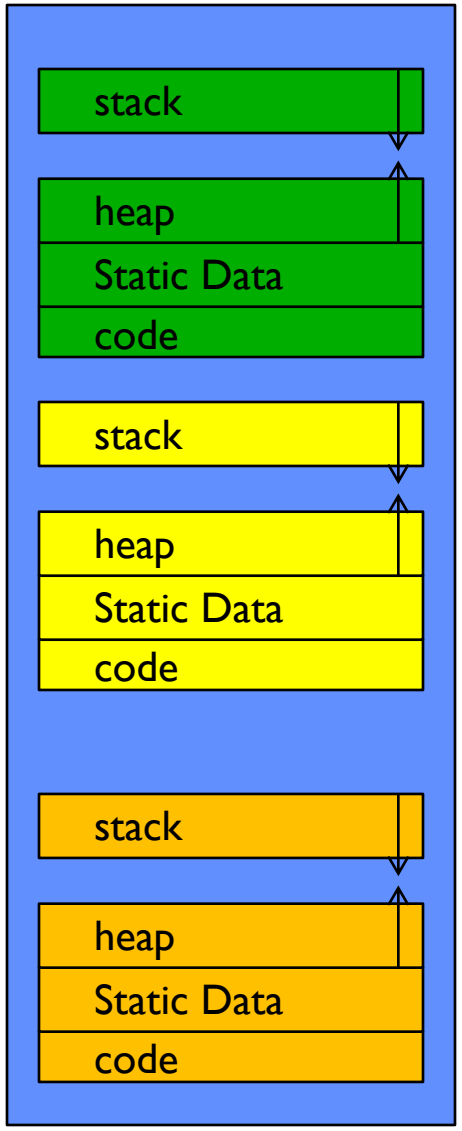

How can we give the illusion of multiple processors?

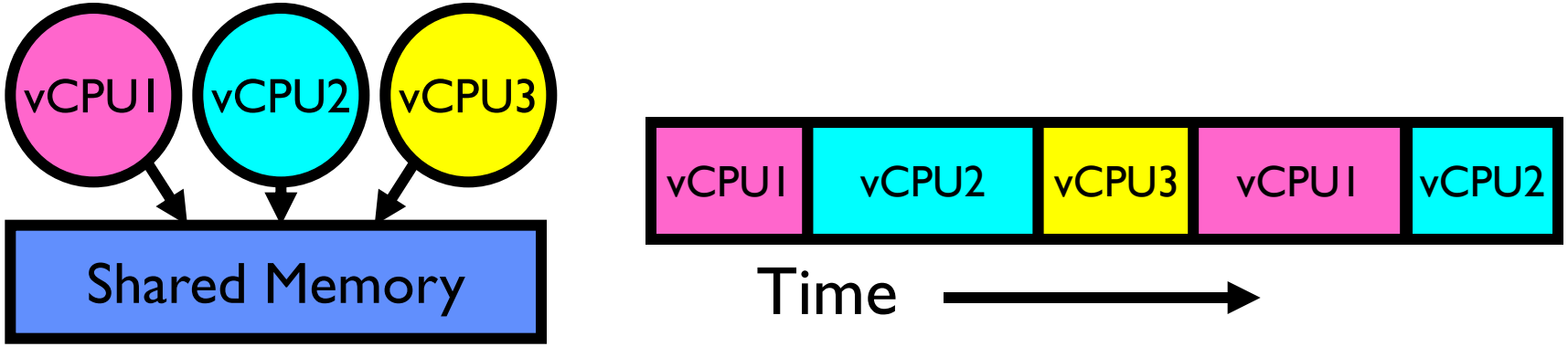

- Assume a single processor. How do we provide the illusion of multiple processors?
  - Multiplex in time!
- Each virtual "CPU" needs a structure to hold:
  - Program Counter (PC), Stack Pointer (SP)
  - Registers (Integer, Floating point, others…?)
- How switch from one virtual CPU to the next?
  - Save PC, SP, and registers in current state block
  - Load PC, SP, and registers from new state block
- What triggers switch?
  - Timer, voluntary yield, I/O, other things

The Basic Problem of Concurrency

- The basic problem of concurrency involves resources:
  - Hardware: single CPU, single DRAM, single I/O devices
  - Multiprogramming API: processes think they have exclusive access to shared resources
- OS has to coordinate all activity
  - Multiple processes, I/O interrupts, …
  - How can it keep all these things straight?
- Basic Idea: Use Virtual Machine abstraction
  - Simple machine abstraction for processes
  - Multiplex these abstract machines
- Dijkstra did this for the "THE system"
  - Few thousand lines vs 1 million lines in OS 360 (1K bugs)

Properties of this simple multiprogramming technique

- All virtual CPUs share same non-CPU resources
  - I/O devices the same
  - Memory the same
- Consequence of sharing:
  - Each thread can access the data of every other thread (good for sharing, bad for protection)
  - Threads can share instructions (good for sharing, bad for protection)
  - Can threads overwrite OS functions?
- This (unprotected) model is common in:
  - Embedded applications
  - Windows 3.1/Early Macintosh (switch only with yield)
  - Windows 95—ME (switch with both yield and timer)

Protection

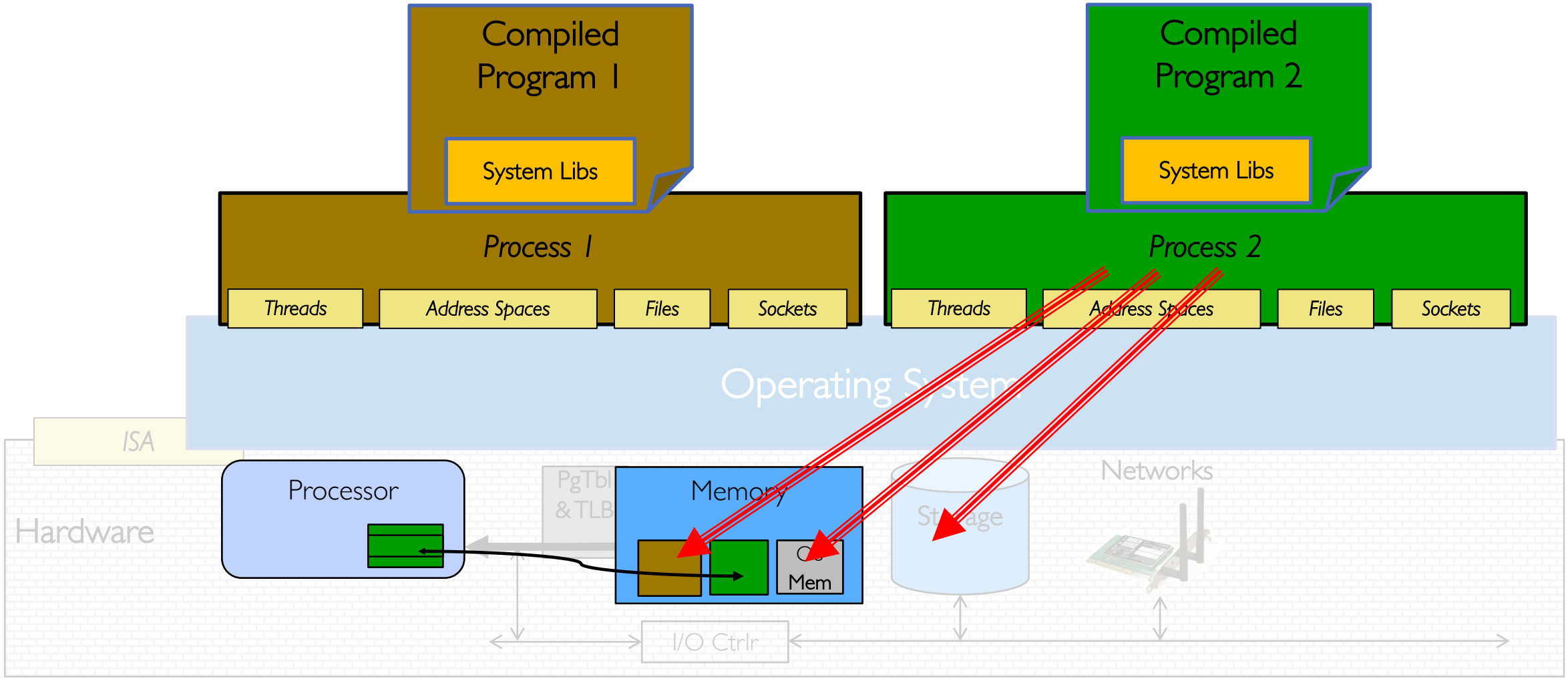
Compiled Program 1
System Libs
Process 1
Threads
Address Spaces
Files
Sockets
Compiled Program 2
System Libs
Process 2
Threads
Address Spaces
Files
Sockets
Operating System
ISA
Hardware
Processor
PgTbl & TLB
Memory
OS Mem
Storage
Networks
I/O Ctrlr

Protection

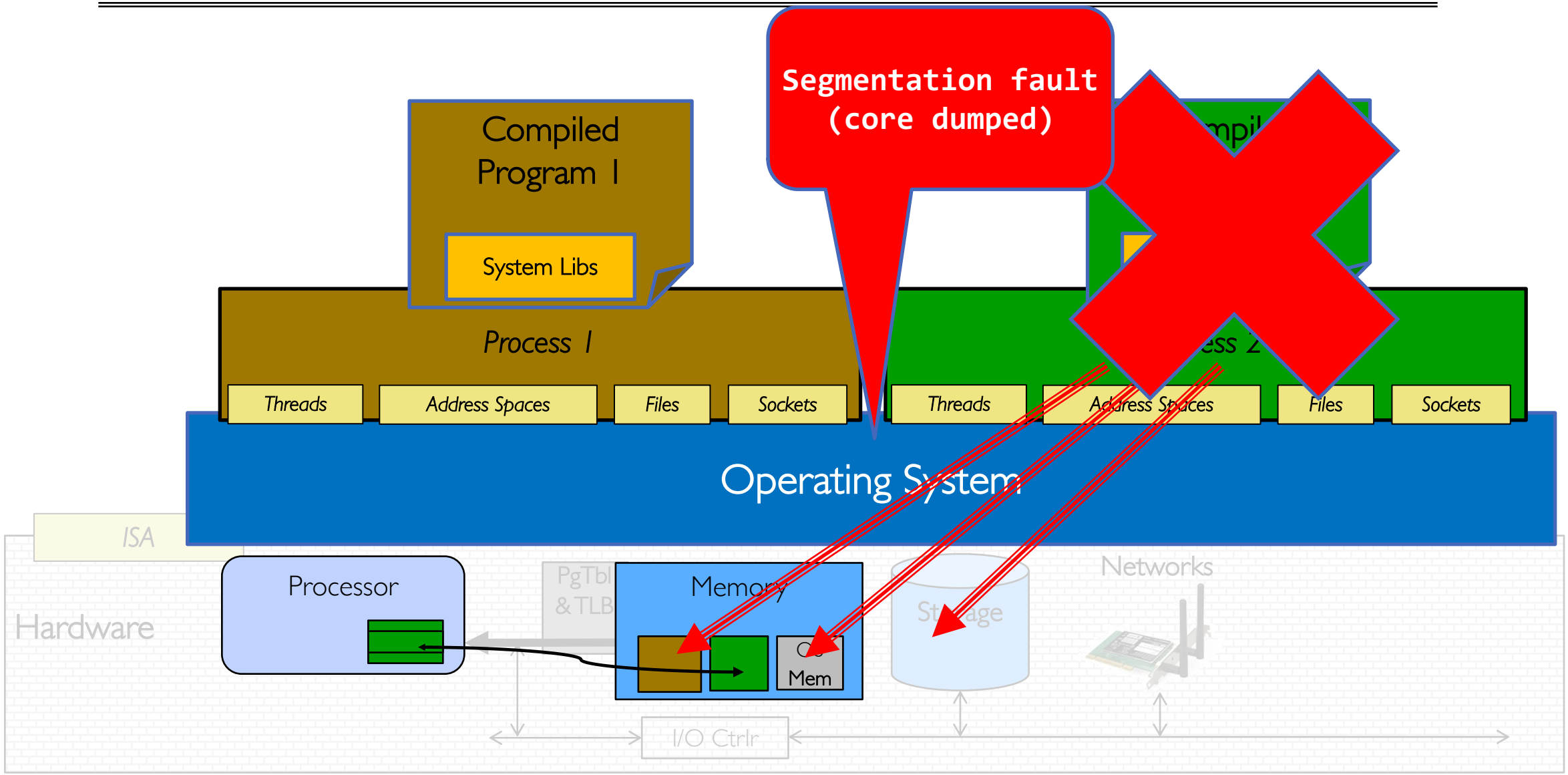
Segmentation fault
(core dumped)
Compiled
Program 1
System Libs
Process 1
Threads
Address Spaces
Files
Sockets
Threads
Address Spaces
Files
Sockets
Operating System
ISA
Hardware
Processor
PgTbl
& TLB
Memory
Mem
Networks
I/O Ctrlr

Protection

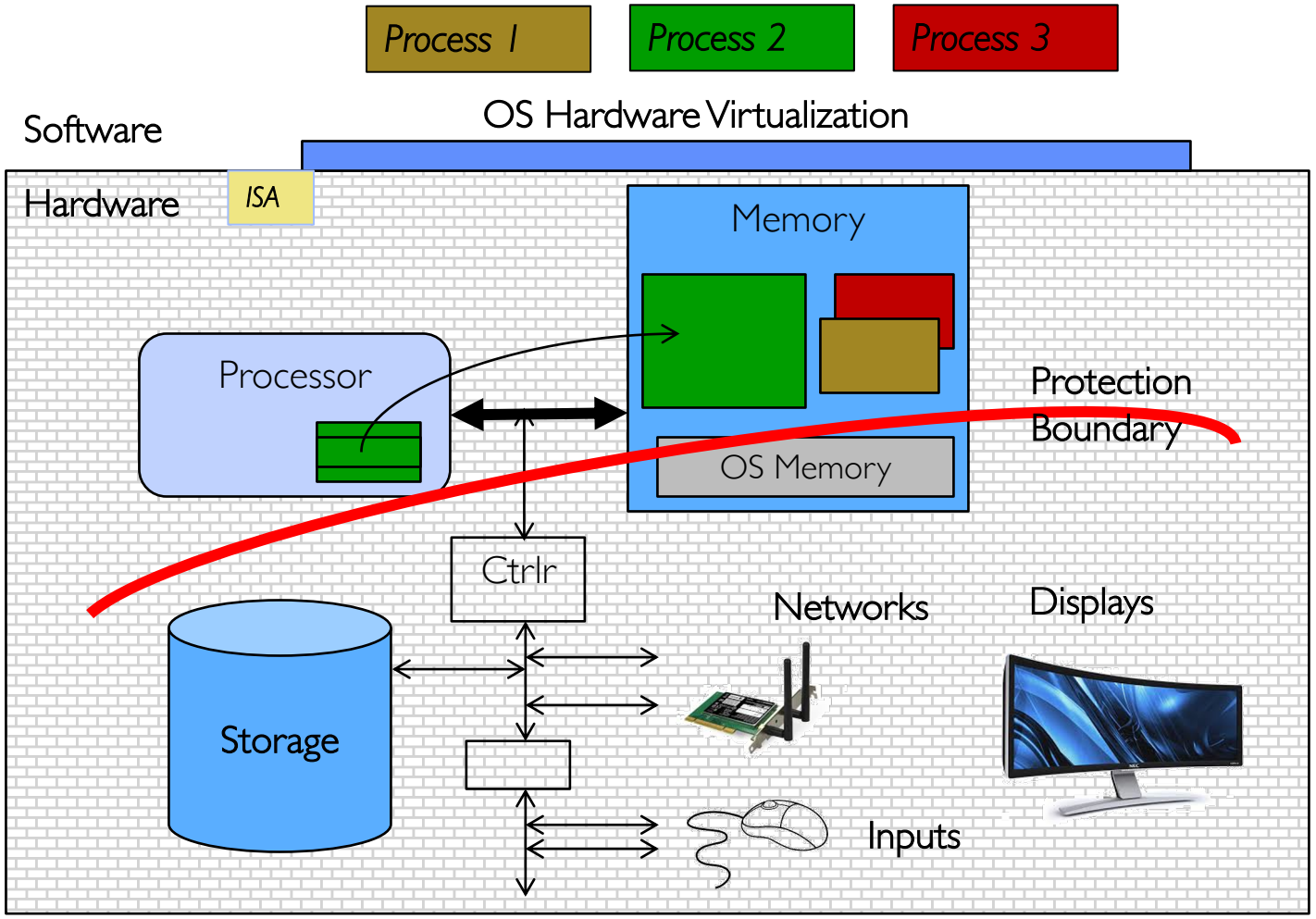

- OS *isolates* processes from each other
- OS *isolates* itself from other processes
- … even though they are actually running on the same hardware!

Protection

- Operating System must protect itself from user programs
  - Reliability: compromising the operating system generally causes it to crash
  - Security: limit the scope of what processes can do
  - Privacy: limit each process to the data it is permitted to access
  - Fairness: each should be limited to its appropriate share of system resources (CPU time, memory, I/O, etc)
- It must protect User programs from one another
- Primary Mechanism: limit the translation from program address space to physical memory space
  - Can only touch what is mapped into process *address space*
- Additional Mechanisms:
  - Privileged instructions, in/out instructions, special registers
  - syscall processing, subsystem implementation
    - » (e.g., file access rights, etc)

Third OS Concept: Process

- **Process:** execution environment with Restricted Rights
  - **Address Space with One or More Threads**
  - Owns memory (address space)
  - Owns file descriptors, file system context, …
  - Encapsulate one or more threads sharing process resources
- Why **processes**?
  - Protected from each other!
  - OS Protected from them
  - Processes provides memory protection
  - Threads more efficient than processes (later)
- Fundamental tradeoff between protection and efficiency
  - Communication easier *within* a process
  - Communication harder *between* processes
- Application instance consists of one or more processes

Single and Multithreaded Processes

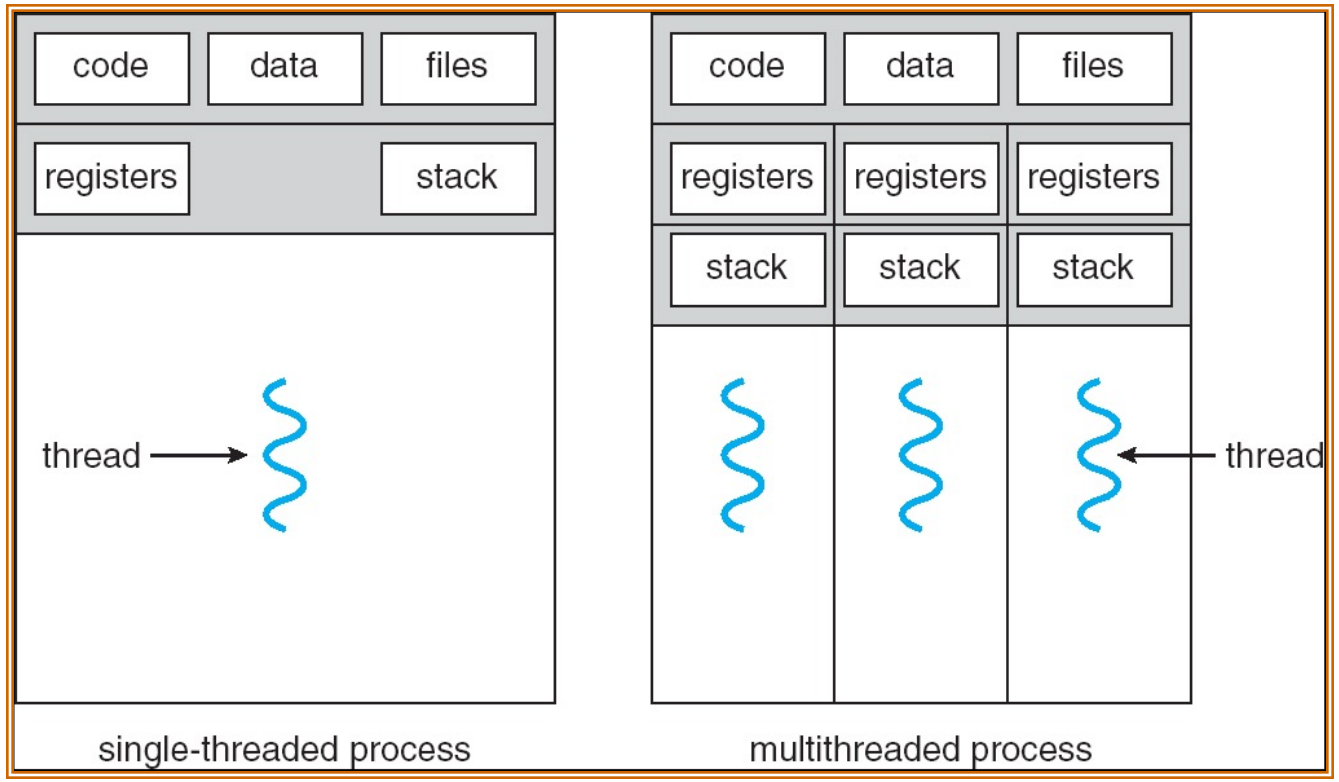

- Threads encapsulate concurrency: "Active" component
- Address spaces encapsulate protection: "Passive" part
  - Keeps buggy program from trashing the system
- Why have multiple threads per address space?

Fourth OS Concept: Dual Mode Operation

- Hardware provides at least two modes:
  - "Kernel" mode (or "supervisor" or "protected")
  - "User" mode: Normal programs executed
- What is needed in the hardware to support "dual mode" operation?
  - A bit of state (user/system mode bit)
  - Certain operations / actions only permitted in system/kernel mode
    - » In user mode they fail or trap
  - User → Kernel transition *sets* system mode AND saves the user PC
    - » Operating system code carefully puts aside user state then performs the necessary operations
  - Kernel → User transition *clears* system mode AND restores appropriate user PC
    - » return-from-interrupt

User/Kernel (Privileged) Mode

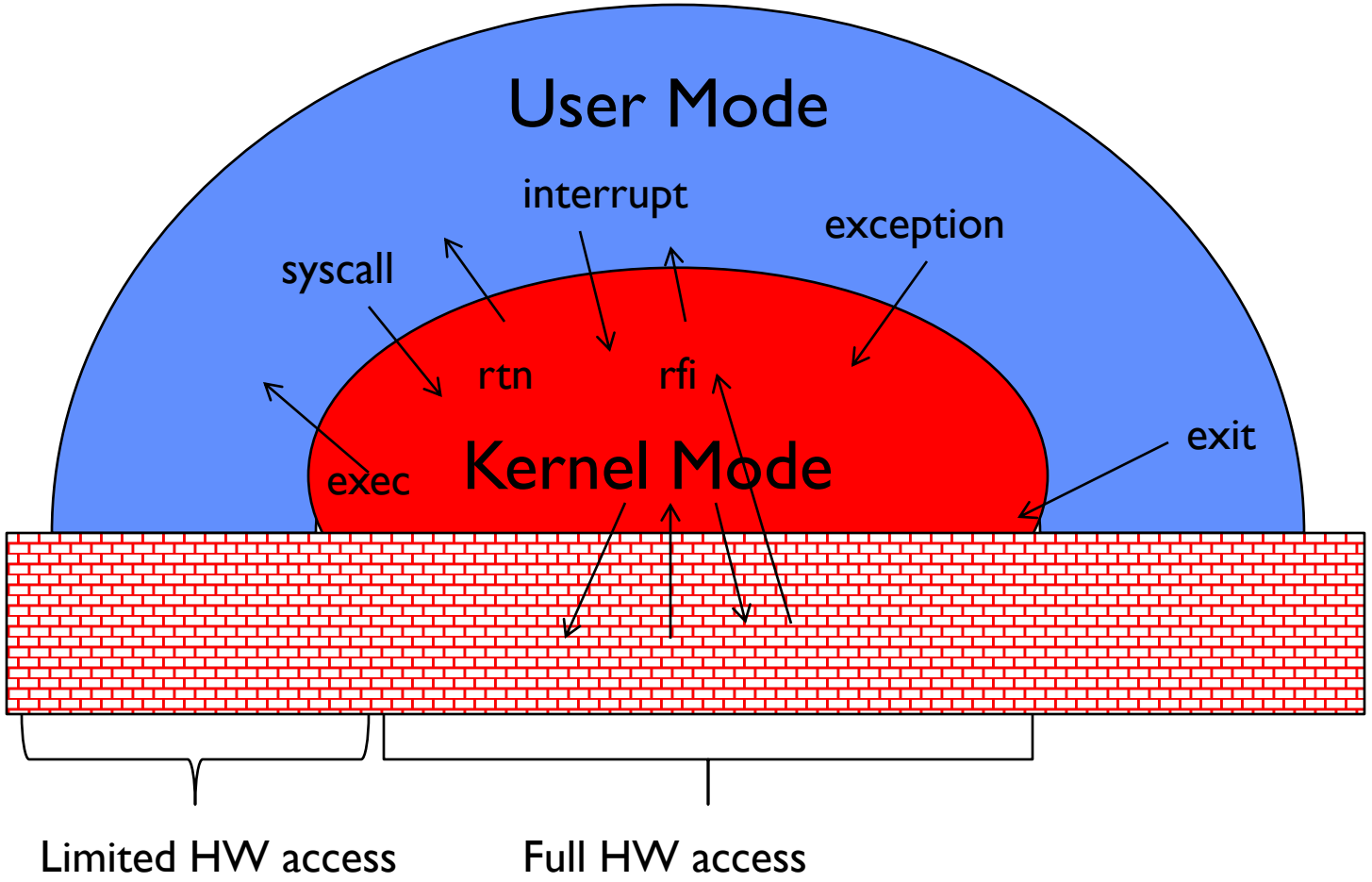

Simple Protection: Base and Bound (B&B)

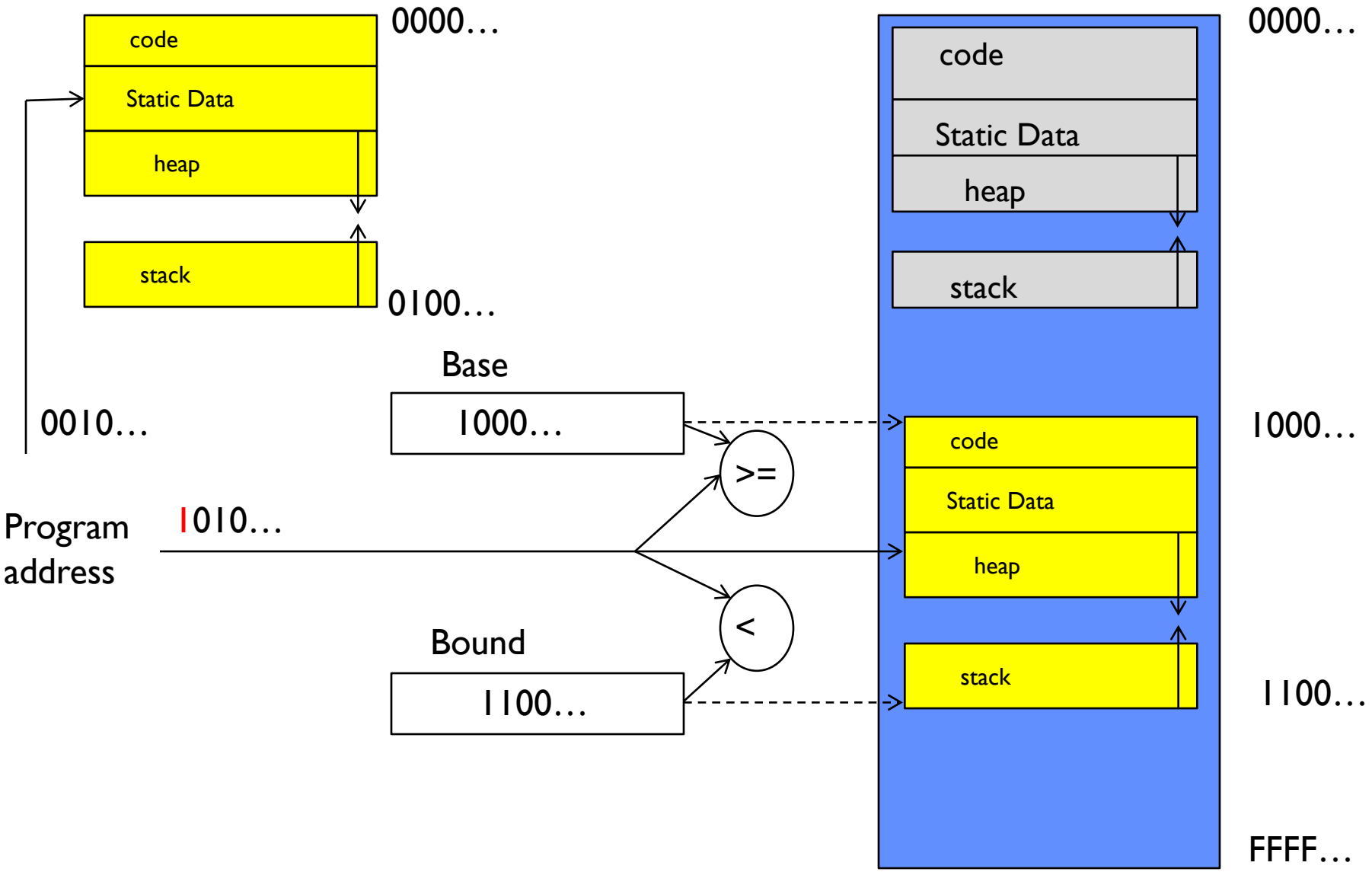

Simple Protection: Base and Bound (B&B)

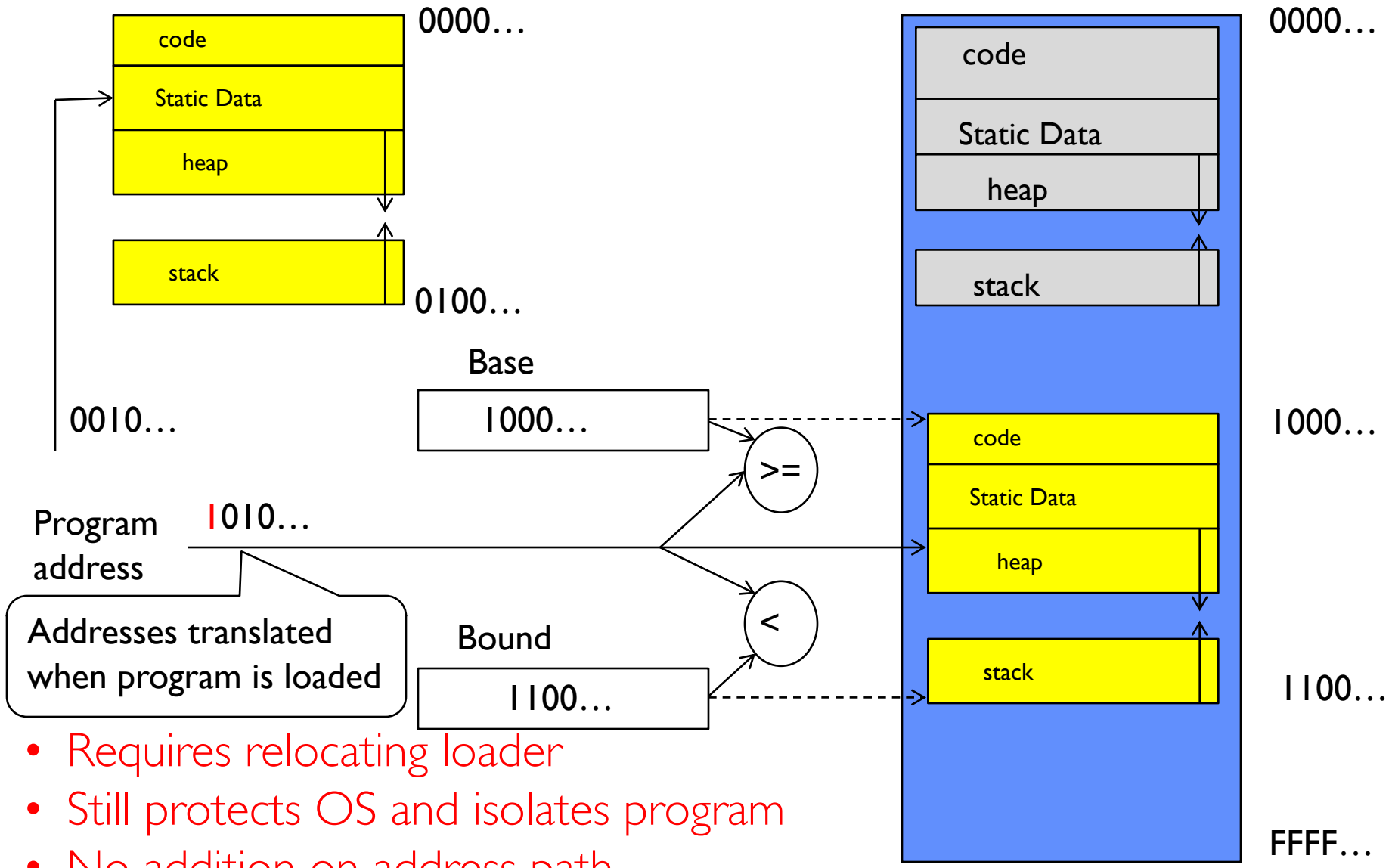

- Requires relocating loader
- Still protects OS and isolates program
- No addition on address path

Another idea: Address Space Translation

- Program operates in an address space that is distinct from the physical memory space of the machine

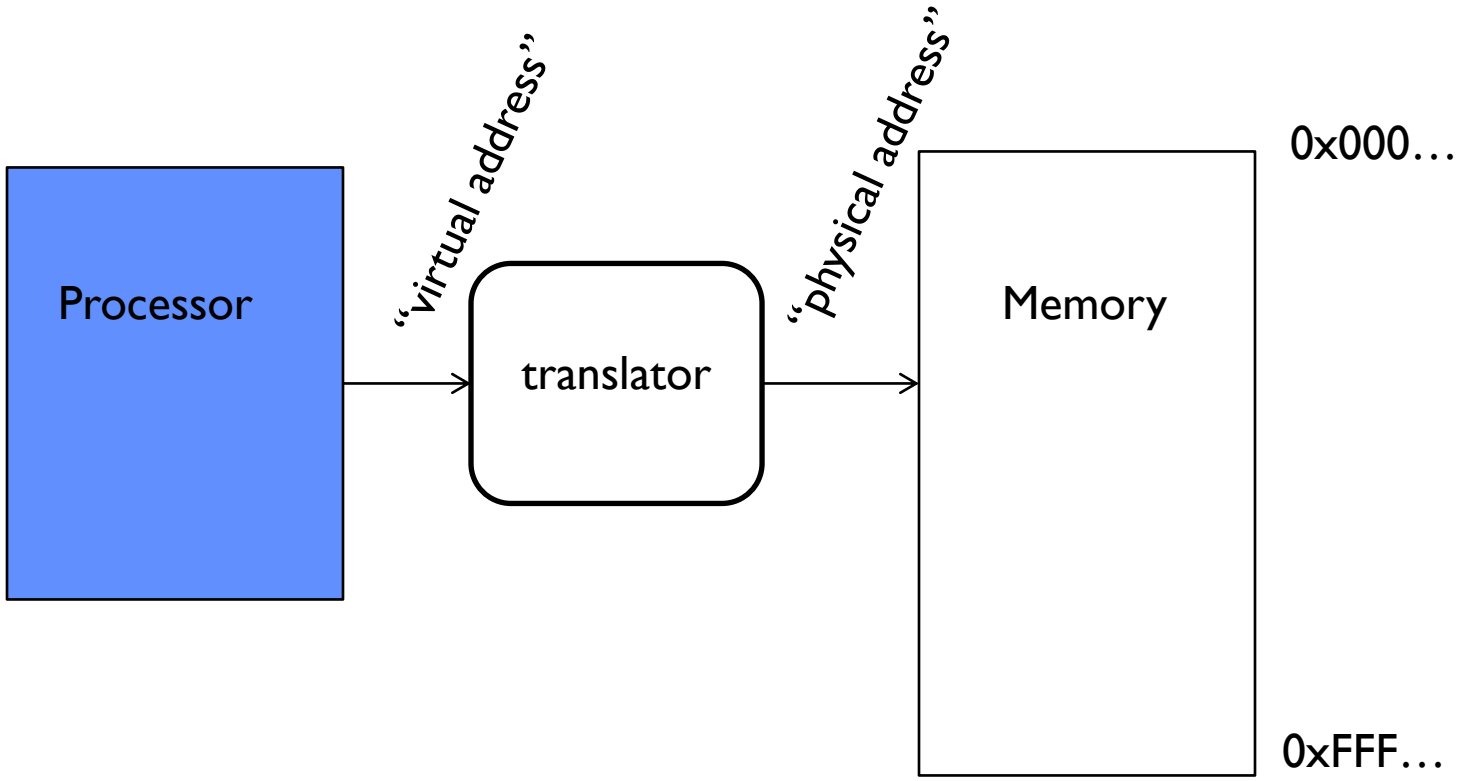

A simple address translation with Base and Bound

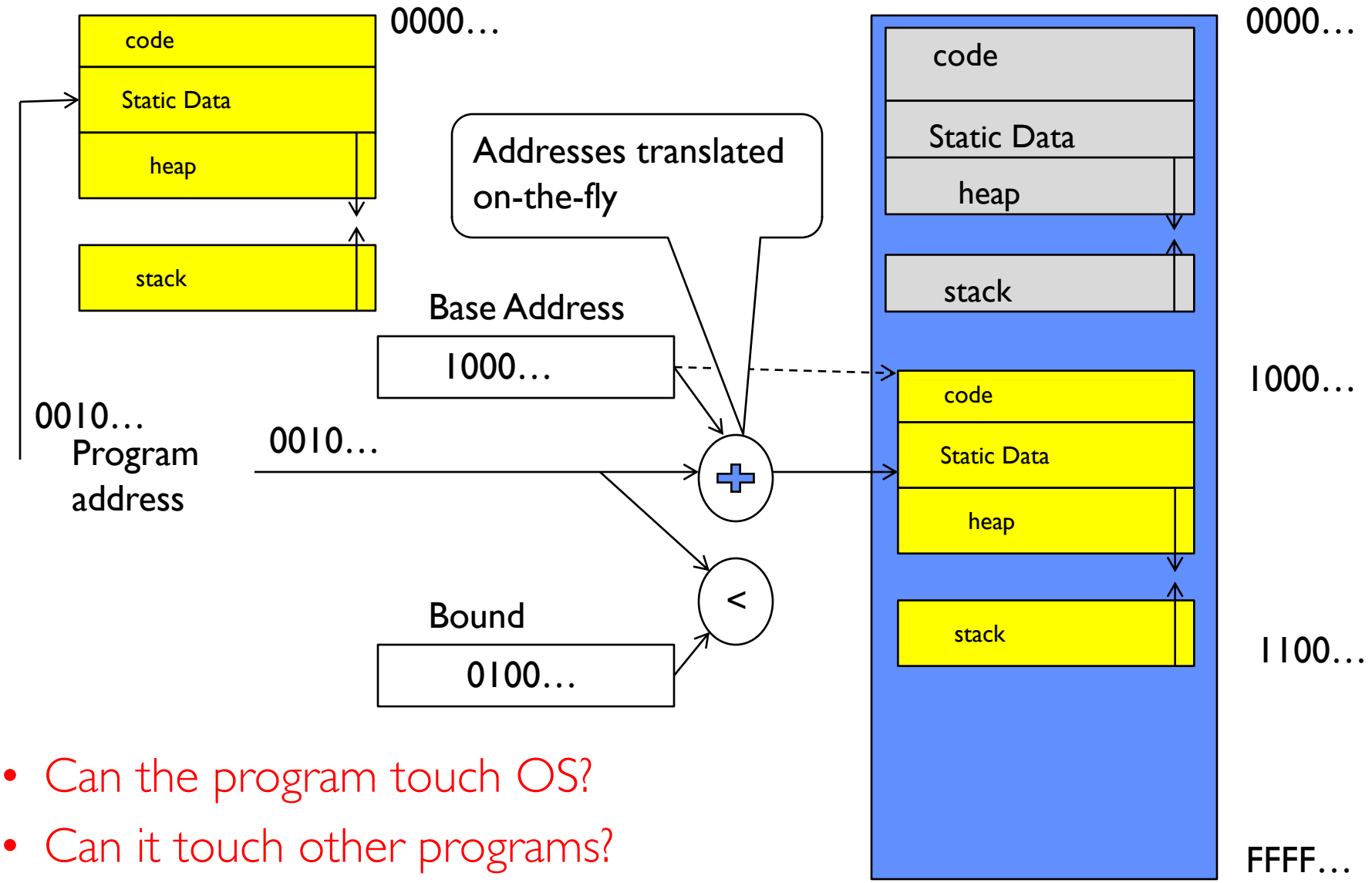

- Can the program touch OS?
- Can it touch other programs?

Tying it together: Simple B&B: OS loads process

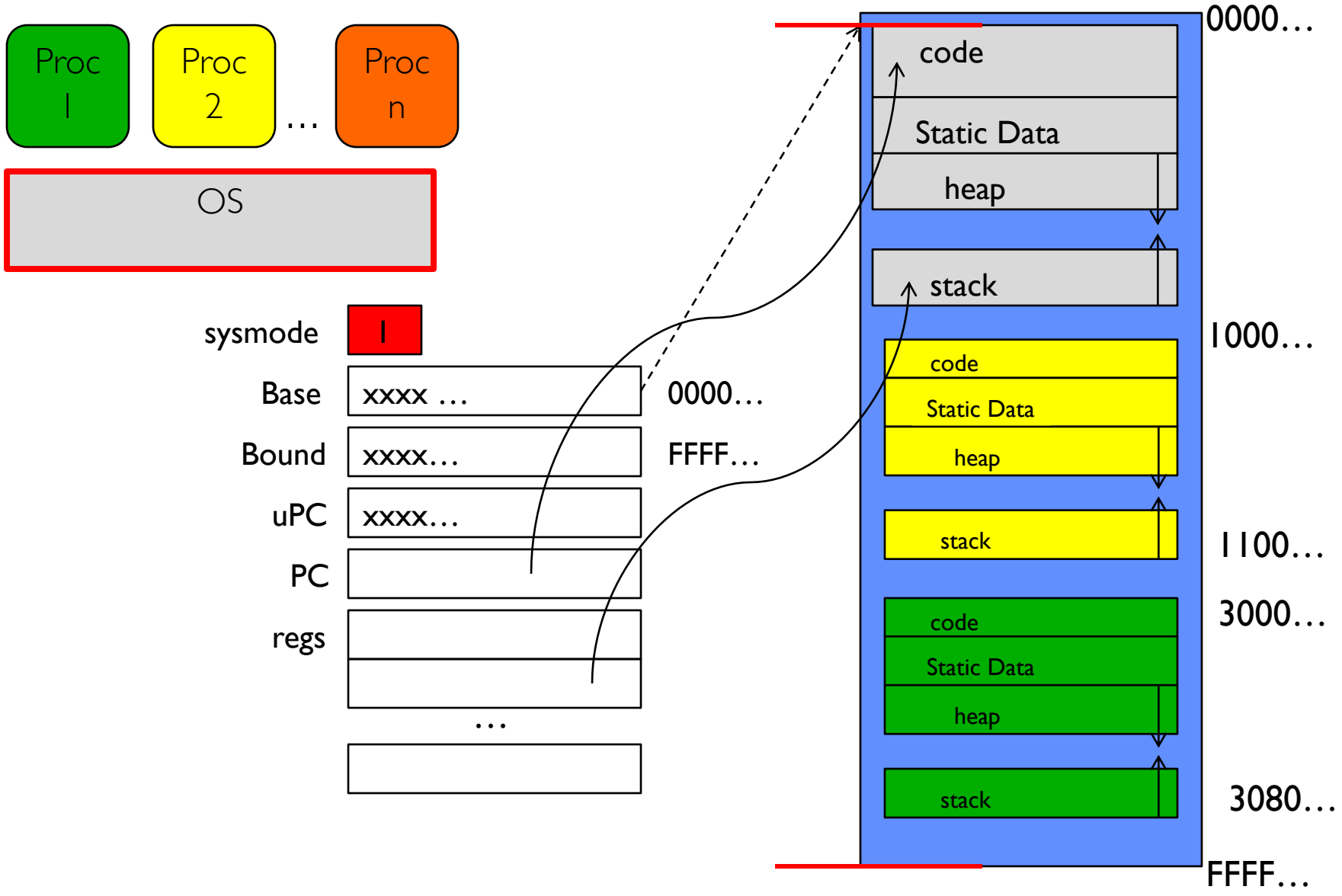

Simple B&B: OS gets ready to execute process

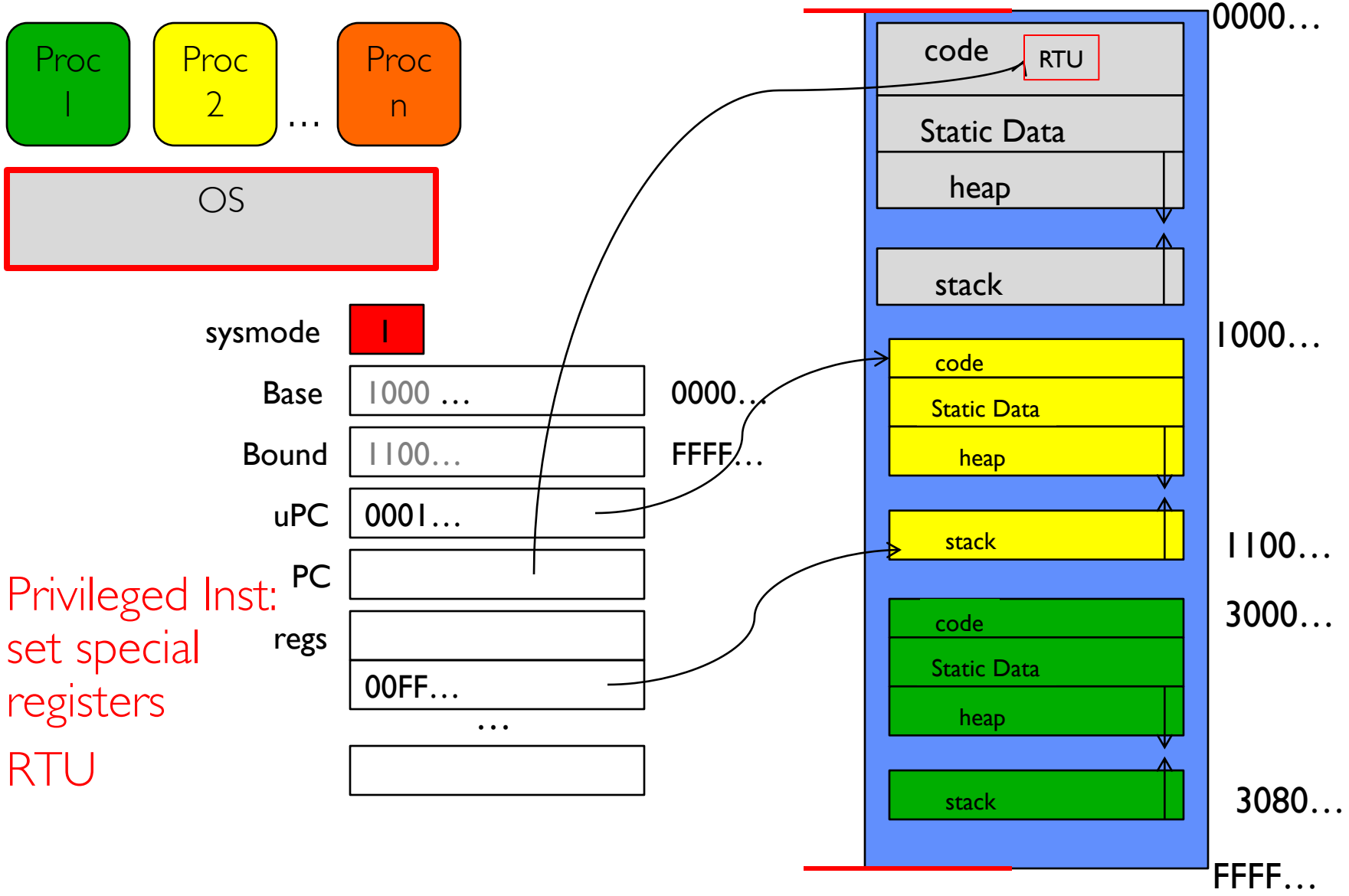

- Privileged Inst: set special registers
- RTU

Simple B&B: User Code Running

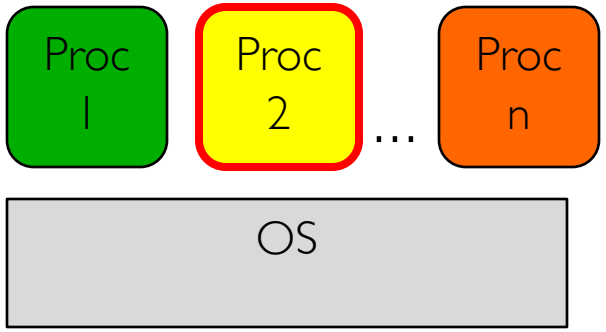

sysmode	0	
Base	1000 …	0000…
Bound	1100…	FFFF…
uPC	xxxx…	
PC	0001…	
regs		
	00FF…	
	…	

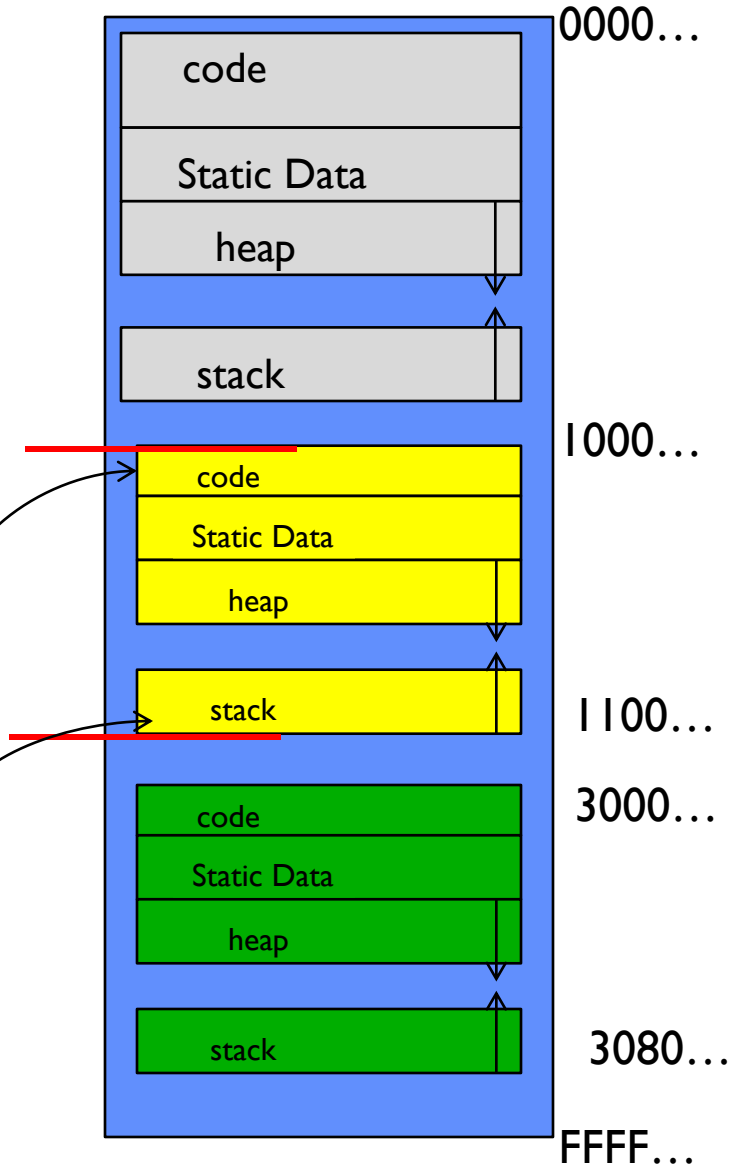

- How does kernel switch between processes?
- First question: How to return to system?

3 types of Mode Transfer

- Syscall
  - Process requests a system service, e.g., exit
  - Like a function call, but "outside" the process
  - Does not have the address of the system function to call
  - Like a Remote Procedure Call (RPC) – for later
  - Marshall the syscall id and args in registers and exec syscall
- Interrupt
  - External asynchronous event triggers context switch
  - e. g., Timer, I/O device
  - Independent of user process
- Trap or Exception
  - Internal synchronous event in process triggers context switch
  - e.g., Protection violation (segmentation fault), Divide by zero, …
- All 3 are an UNPROGRAMMED CONTROL TRANSFER
  - Where does it go?

How do we get the system target address of the "unprogrammed control transfer?"

Interrupt Vector

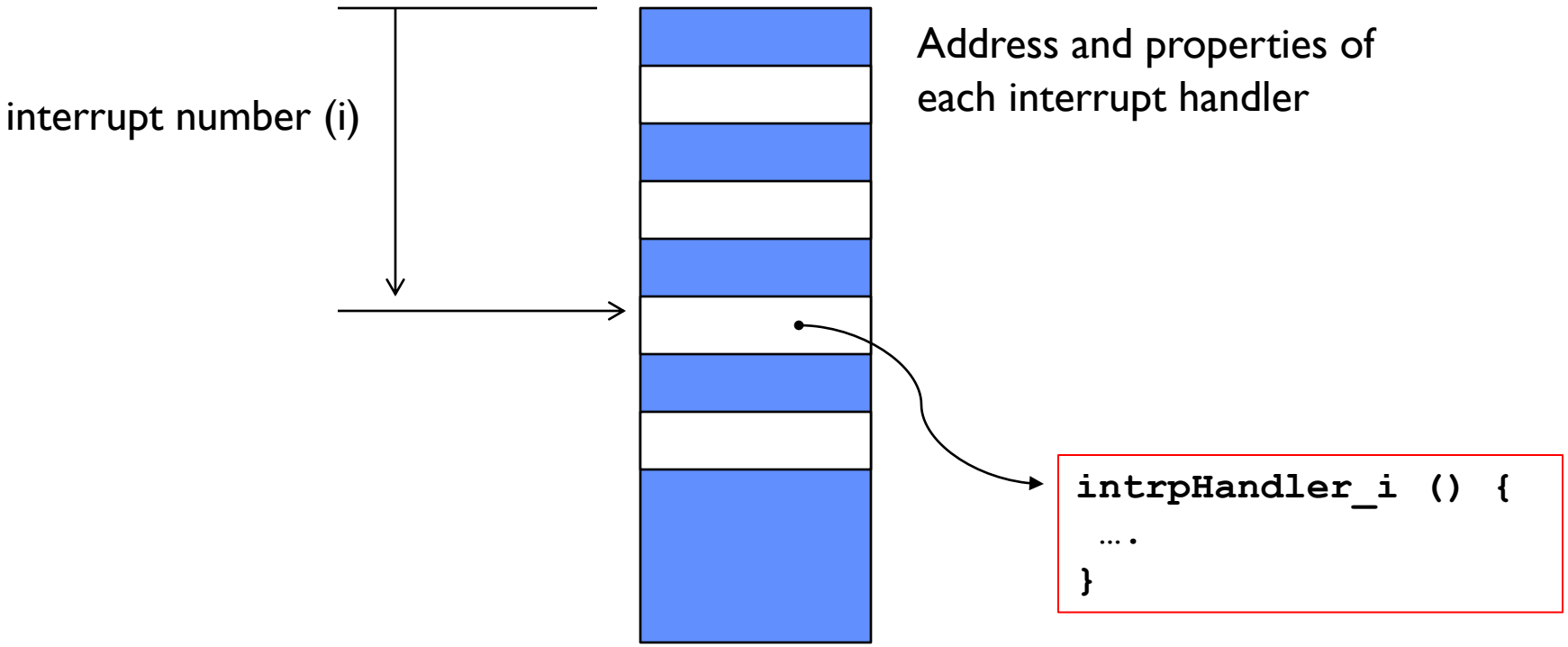

- Where else do you see this dispatch pattern?

Simple B&B: User => Kernel

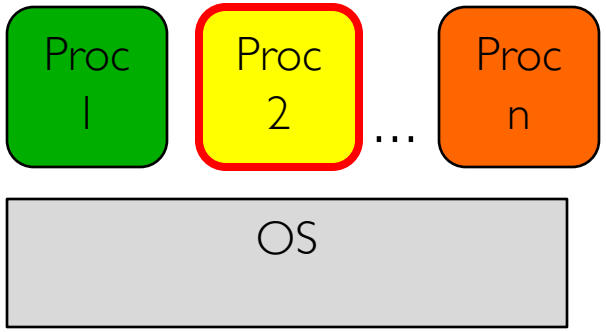

sysmode	0	
Base	1000 …	0000…
Bound	1100…	FFFF…
uPC	xxxx…	
PC	0000 1234	
regs		
	00FF…	
	…	

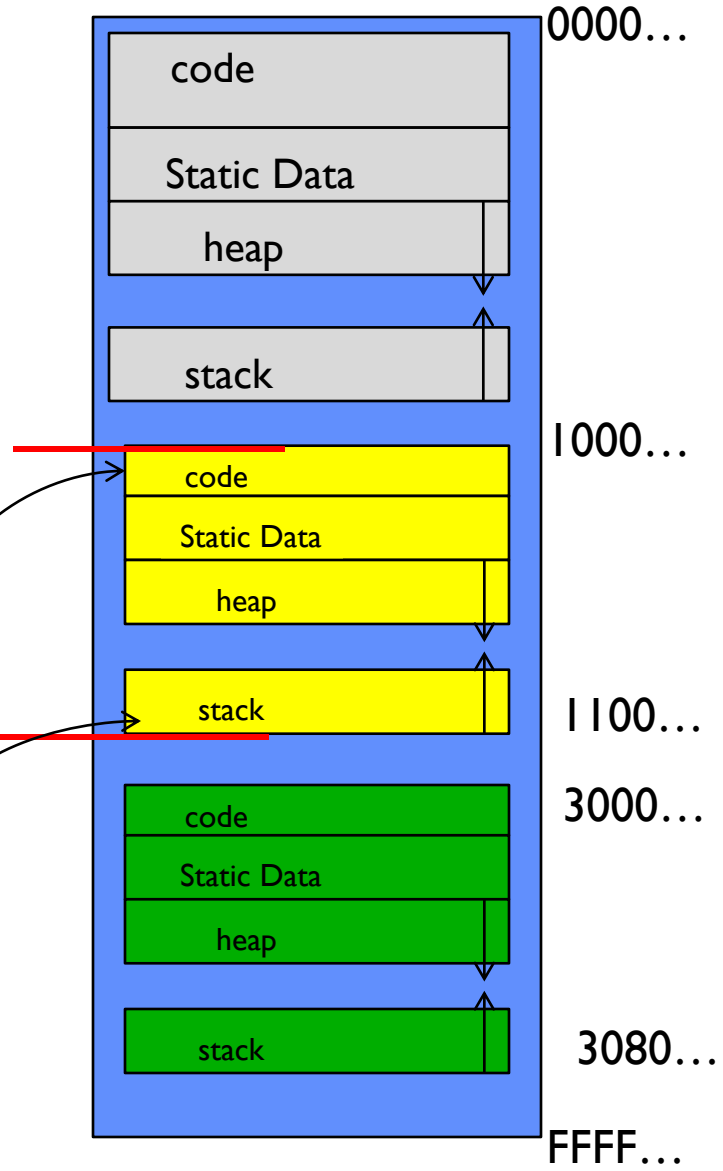

- How to return to system?

Simple B&B: Interrupt

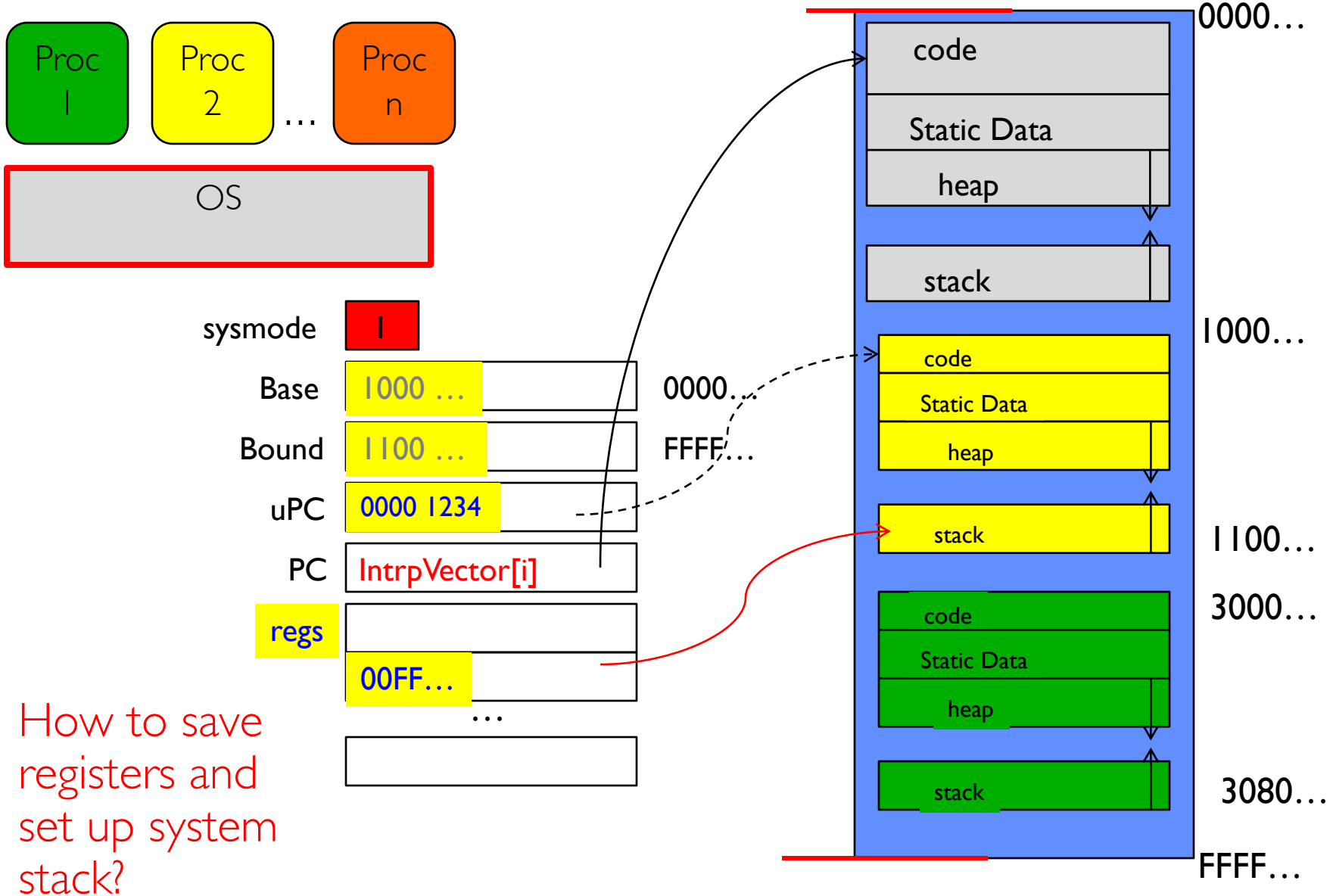

- How to save registers and set up system stack?

Simple B&B: Switch User Process

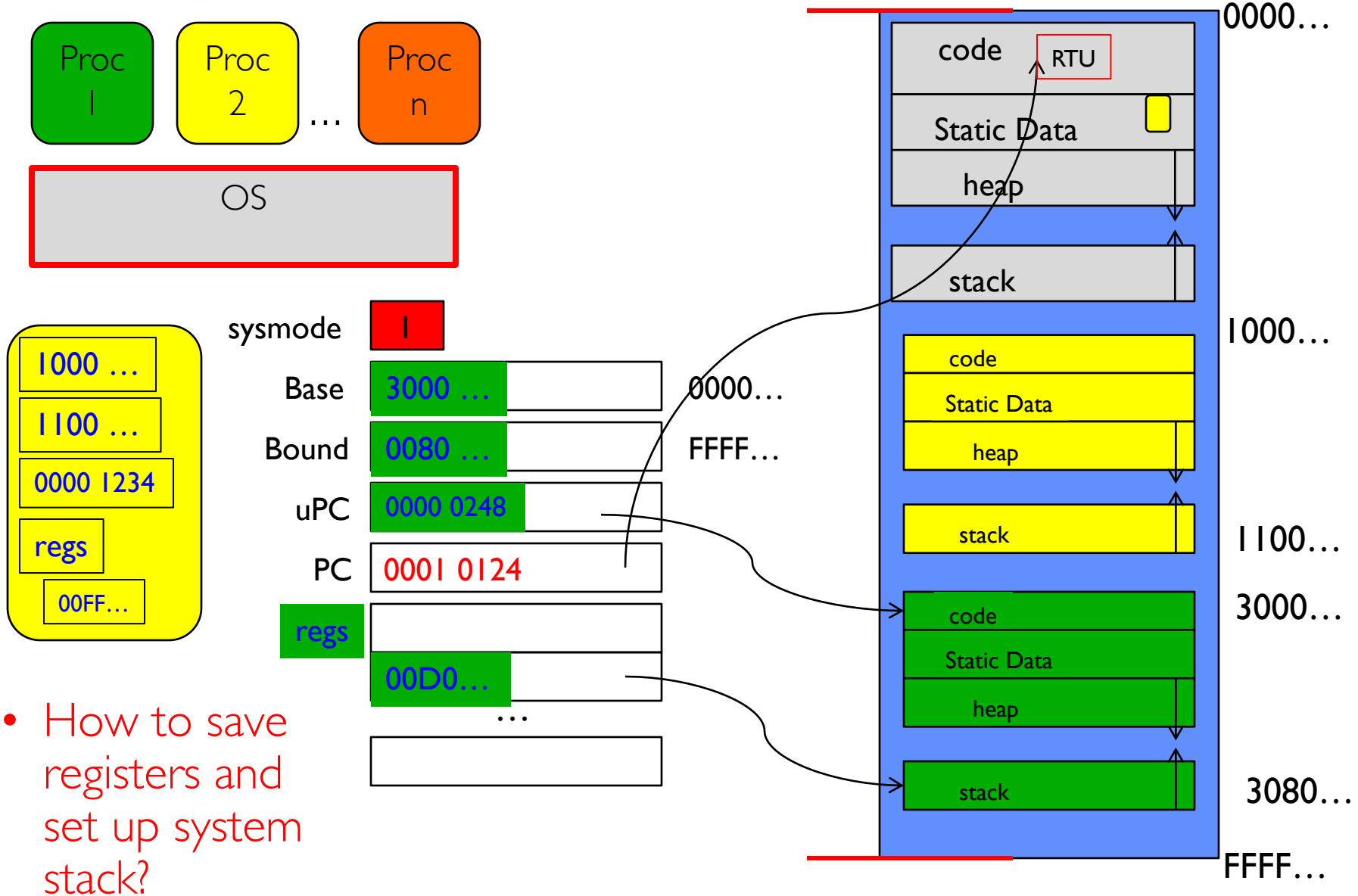

- How to save registers and set up system stack?

Simple B&B: "resume"

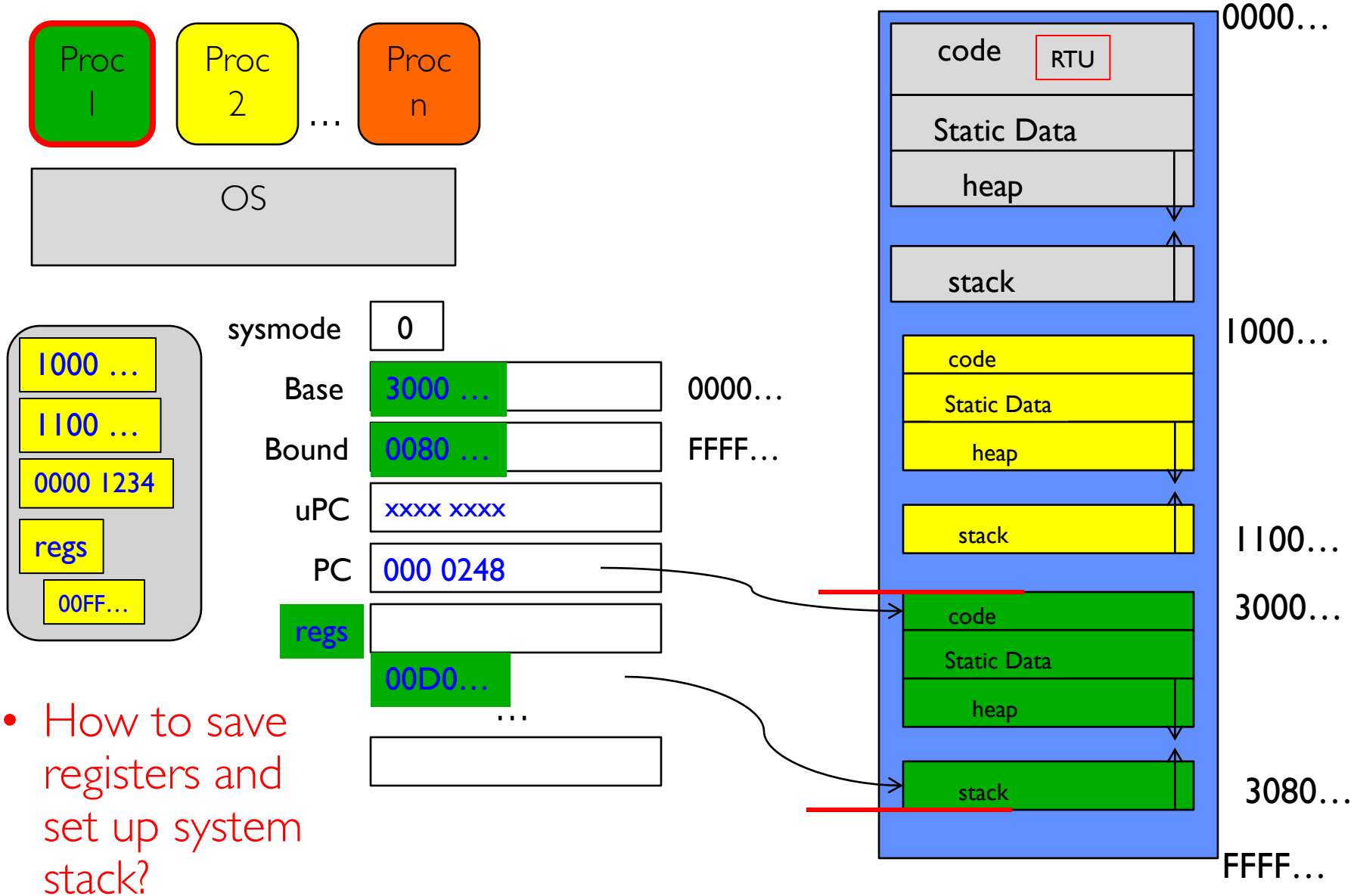

- How to save registers and set up system stack?

Conclusion: Four fundamental OS concepts

- Thread
  - Single unique execution context
  - Program Counter, Registers, Execution Flags, Stack
- Address Space with Translation
  - Programs execute in an *address space* that is distinct from the memory space of the physical machine
- Process
  - An instance of an executing program is *a process consisting of an address space and one or more threads of control*
- Dual Mode operation/Protection
  - Only the "system" has the ability to access certain resources
  - The OS and the hardware are protected from user programs and user programs are isolated from one another by *controlling the translation* from program virtual addresses to machine physical addresses

Administrivia

- Ion's office hours: Mondays 12-1pm via zoom
  - No office hours Wednesday 9/6
- Drop deadline: Friday 9/3
- Group sign up form will be out after drop deadline
  - Work on finding groups ASAP: 4 people in a group!
  - Try to attend either same section or 2 sections by same TA
- Avoid private Piazza posts – others have same question