Basic Electronics

Jonathan Bachrach

EECS UC Berkeley

September 20, 2016

Last Time

- Basic JITPCB

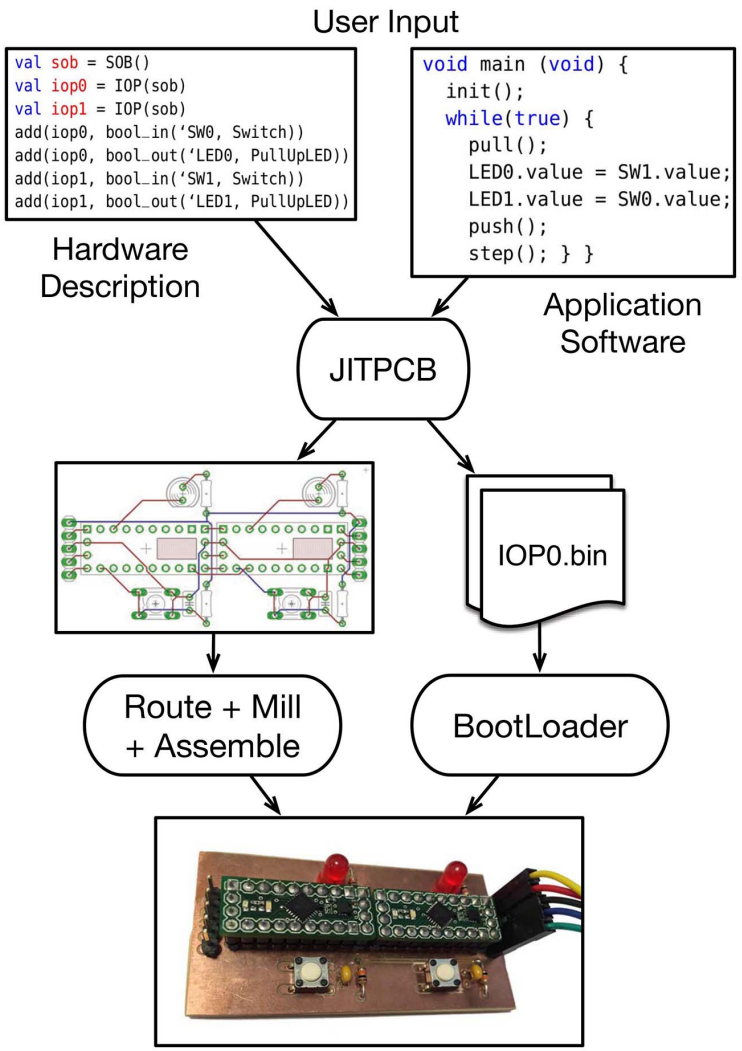

Today

- Basic Electronics

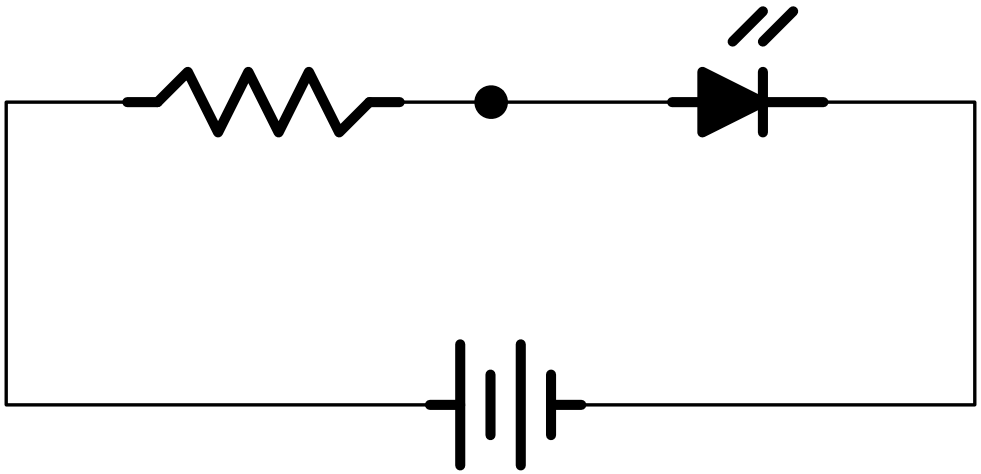

Circuit

- Loop of conductive material
- Graph of electrical *components*
- Edges are *wires*
- Vertices are components
- Points on edges between on components are called *nodes*

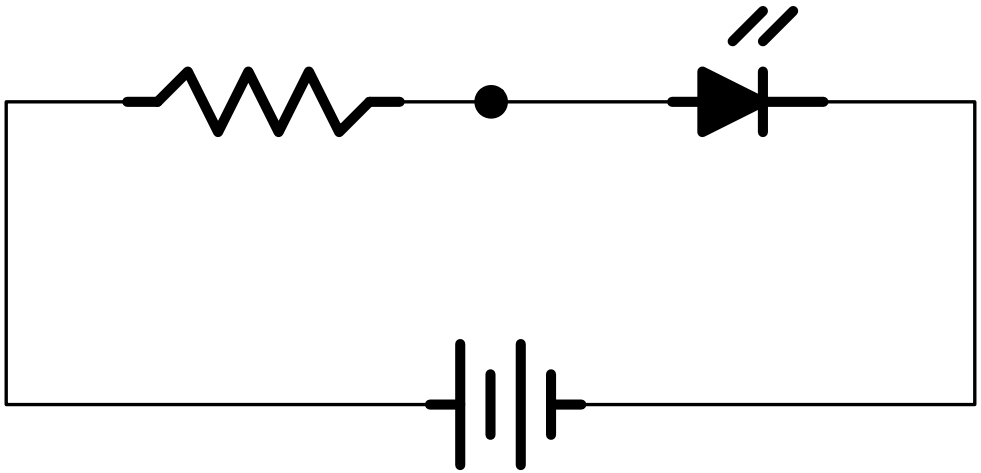

Short Circuit

- Loop from power source to itself
- Beware as dangerous in heat and fire
- Use circuit breaker to prevent damage

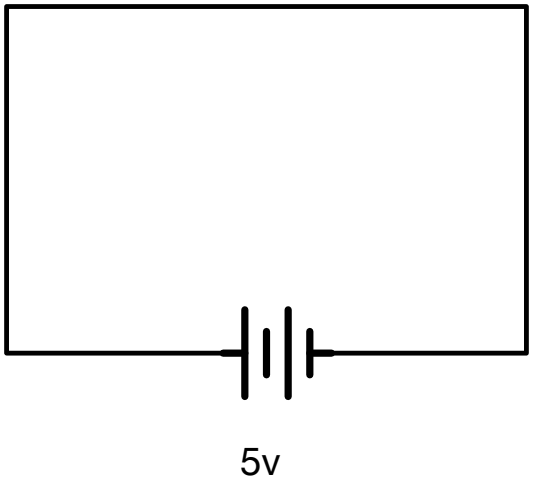

Open Circuit

- Break in loop
- No circuit at all
- Broken circuit
- Can detect with multimeter

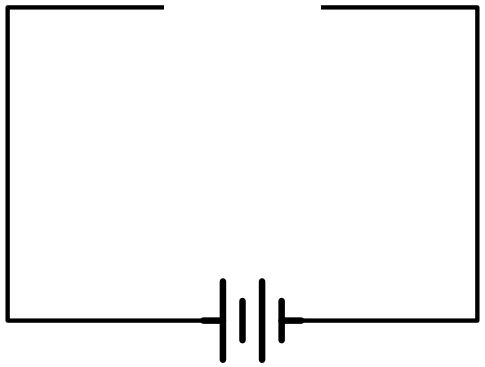

Charge

- Electrons moving between atoms
- Atoms have equal number of protons and electrons
- Some materials have more and freer electrons
- Mobility of electrons is related to conductivity
- Outer electrons are valence electrons and are easy to free

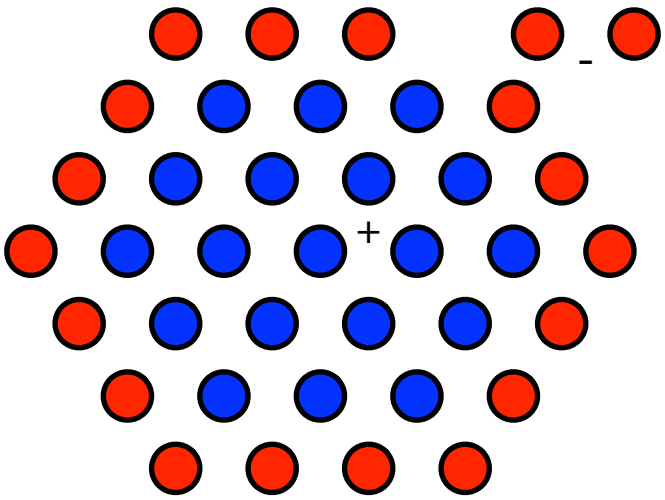

Electrostatic Force

- Like charge repels and different charge attracts
- Amount of force depends on how far they are from each other
- Basis for electric current
- Also causes lightning and sparks

Electronics

- Network of components that transform electricity
- Basics are electrons moving through conductive material
- Information processing and power delivery

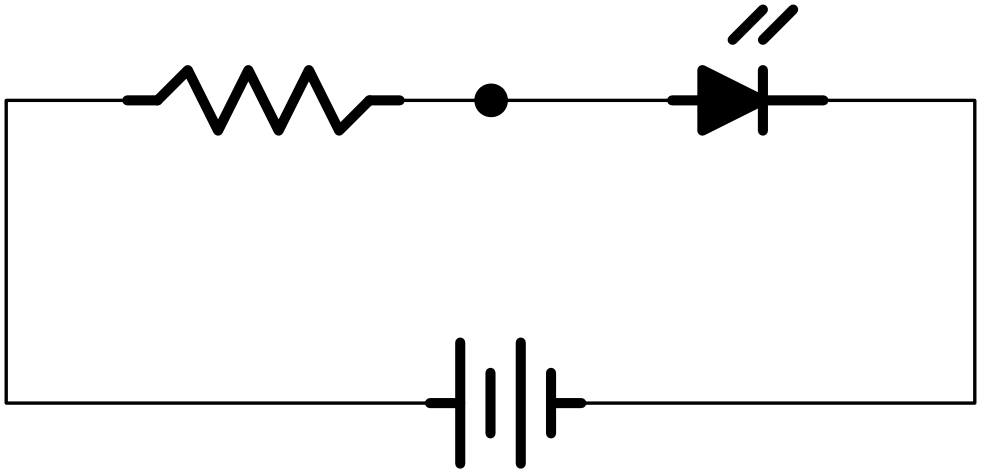

Basic Principles of Electricity

- **Voltage** is difference in charge between two points
- **Current** is rate at which current is flowing at a point
- **Resistance** is degree to which a material slows down current

Current

- Current is flow of electric charge through material
- Usually carried by negatively charged particles called electrons
- Like water flowing down pipes w/ water as charge + flow as current
- Rate at which electric charge flows through a point in circuit
- Needs a closed loop to flow
- Flow from high potential energy to low
- Represented by I or i in equations
- Measured in Amperes or amps for short
- 1 Amp = 1 Coulomb / sec passing point in circuit, where
- 1 Coulomb = $6.241 * 10^{18}$ electrons

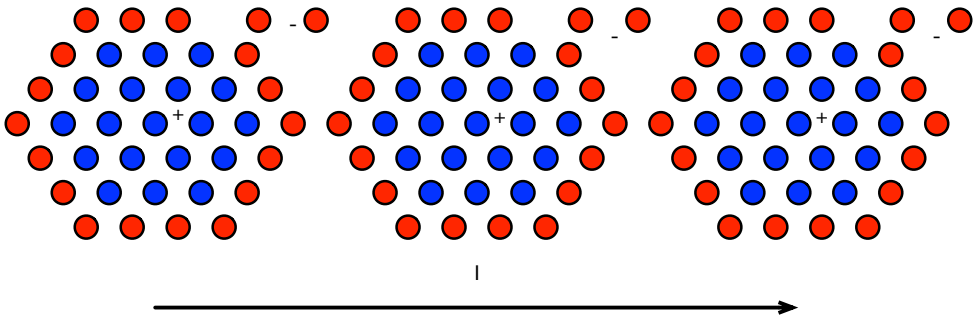

Current Facts

- Fork and joins in circuits divide or sum current flow like pipes
- Unlike voltage don't need to consume only what it needs
- Too little or much current can cause circuit to fail
- Good to use power supply that provides more current than you need

$$I1 + I2 + I3 = I4 + I5$$

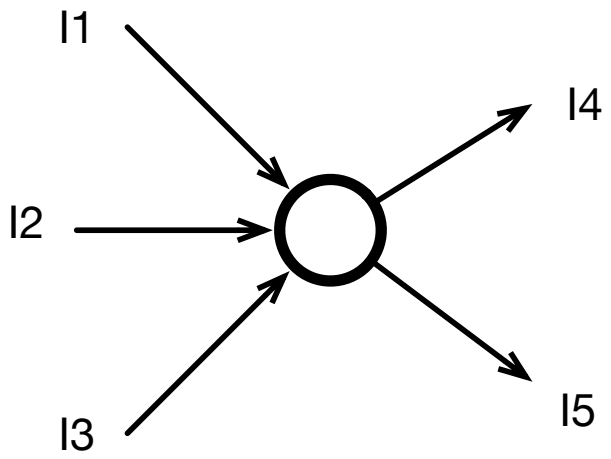

Voltage

- Difference in electronic charge between two points
- Makes current flow
- Like water pressure in pipes
- Need two points to define voltage
  - No absolute voltages only relative ones
  - Difference in electric potential energy between two points
  - Reference is called “ground” and is set to zero volts
- Represented by V in equations
- Measured in terms of energy per unit charge called Volts

Voltage Facts

- All available voltage will be used in a circuit
- Can increase voltage by putting multiple power sources in series
- 5V is common for embedded electronics
- Operating voltage is desired voltage value circuit wants
- Often circuits can run with higher voltage up to some limit
- Components can be damaged with too little or too much voltage
- Voltage regulator takes range of voltage inputs and produces steady voltage output
- Circuits can have multiple voltage inputs

Resistance

- Ability to resist the flow of electrical charge
- Materials with high resistance are often used as insulators
- Like size of pipes in water pipes analogy
- Can regulate flow by increasing or decreasing resistance
- Proportion factor R, is known as the resistance
- Resistance has units of ohms (Ω)
- If voltage across the element is held constant, then increasing the resistance will limit the current going through the element

Ohm's Law

- Describes relationship between voltage, current and resistance
- Says current is directly proportion to voltage

$$V = IR$$

Calculate Current from Voltage and Resistance

- Calculate current through 50 ohm resistor using 5V

$$I = V/R = 5.0v/50\Omega = 0.1amps = 100mA$$

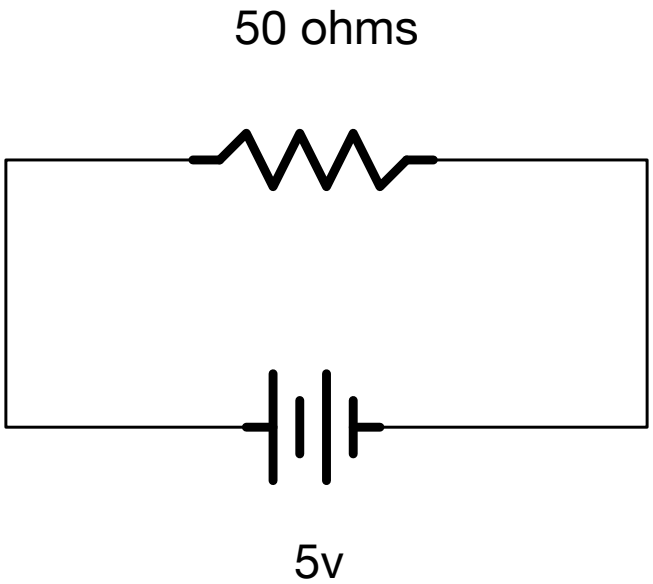

I-V Curves

- Common way to characterize electrical elements is plotting current by voltage
- Can develop eequations that relate current and voltage
- Simplest I-V curve is for a resistor: $V = IR$ (Ohm's law)
- Inverse of the slope, R, is known as the resistance

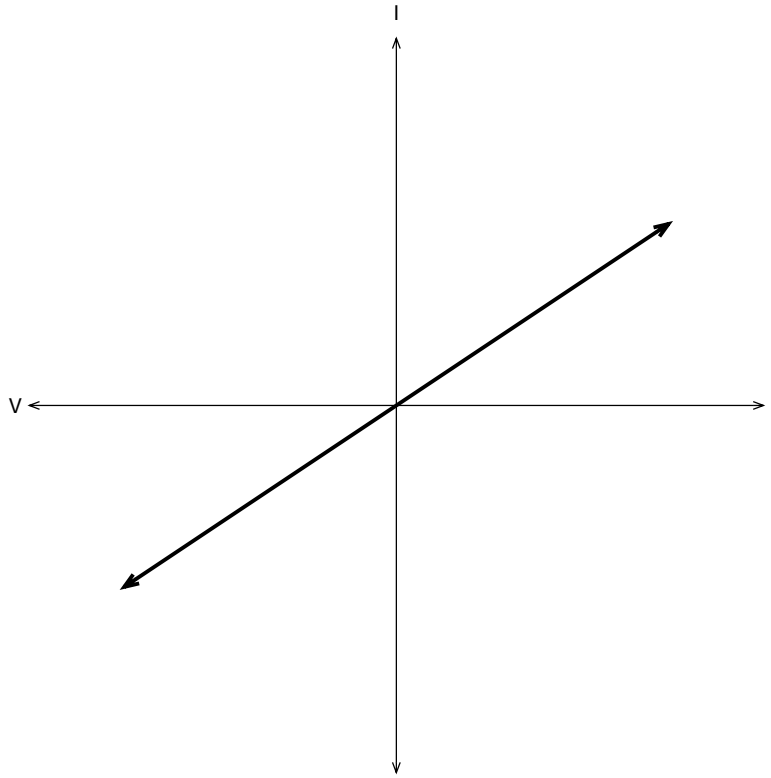

Kirchoff Laws

- Basically conservation of energy
- Sum of voltages in circuit loop adds to zero
- Sum of currents going in equal sum of currents going out

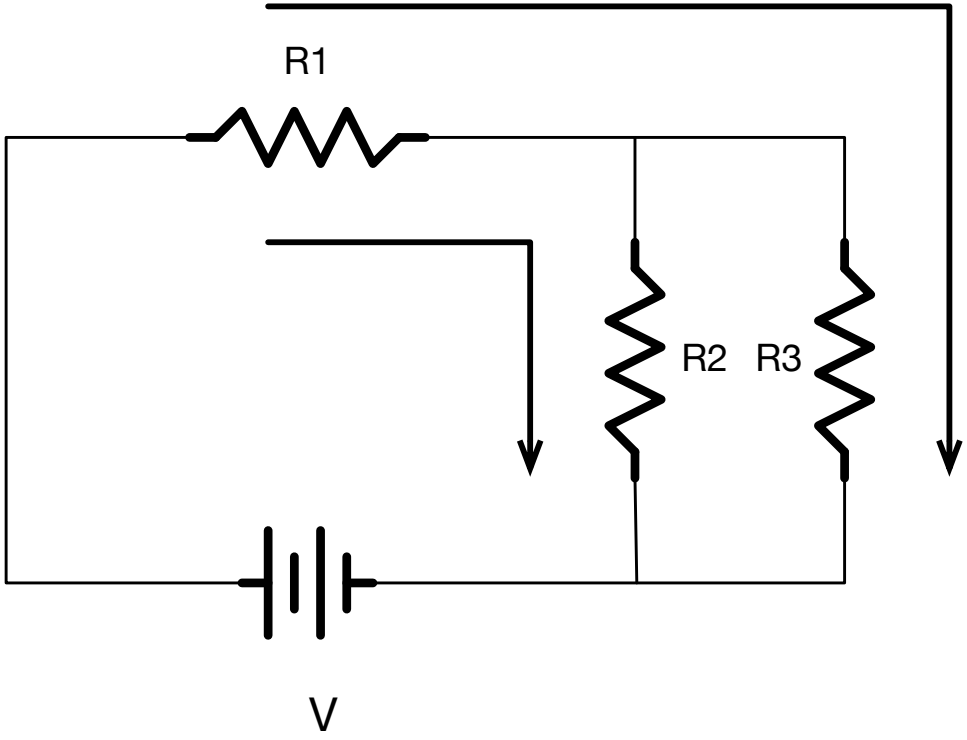

- Node is point in circuit between components

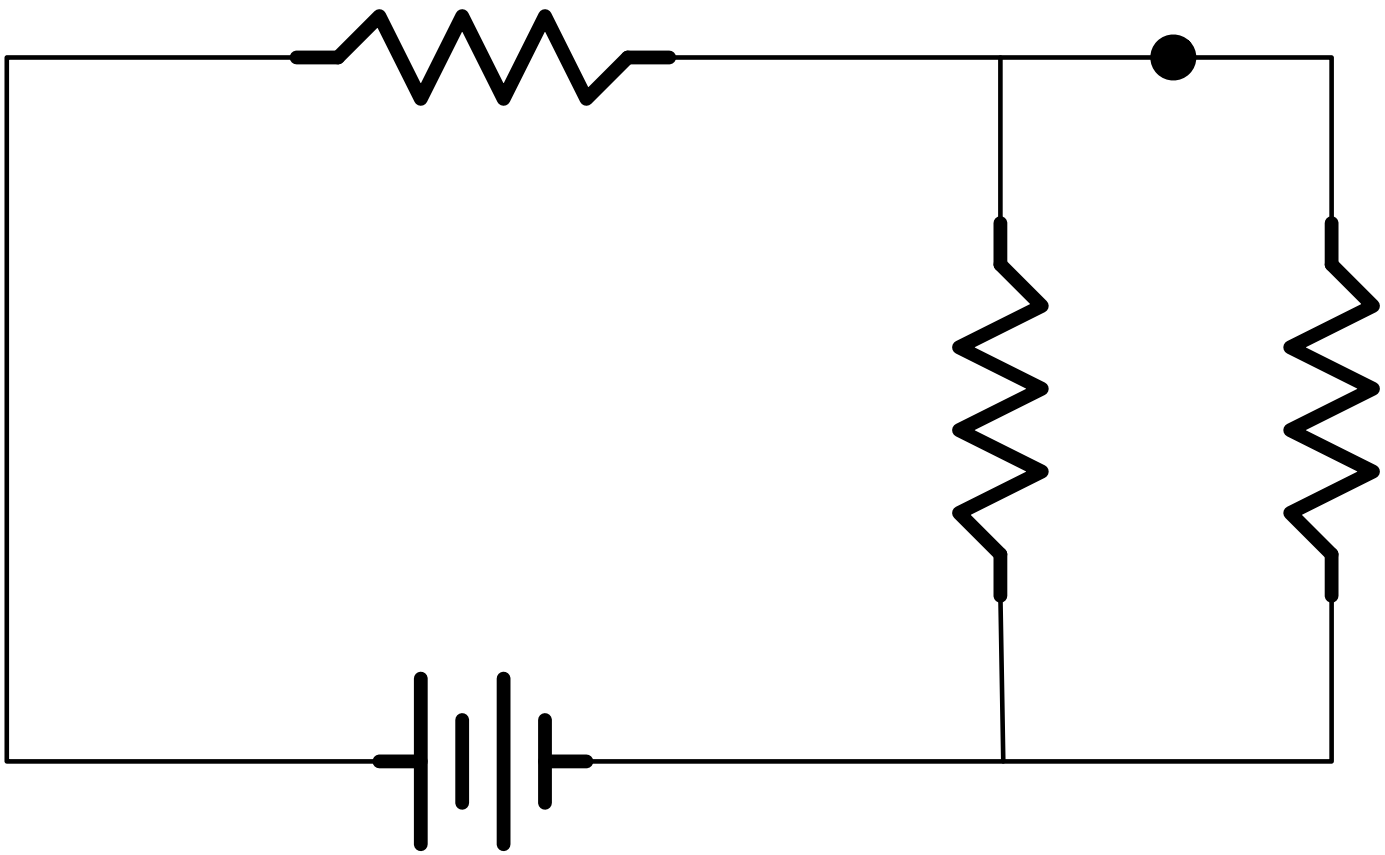

Series Circuit

- Components share one node

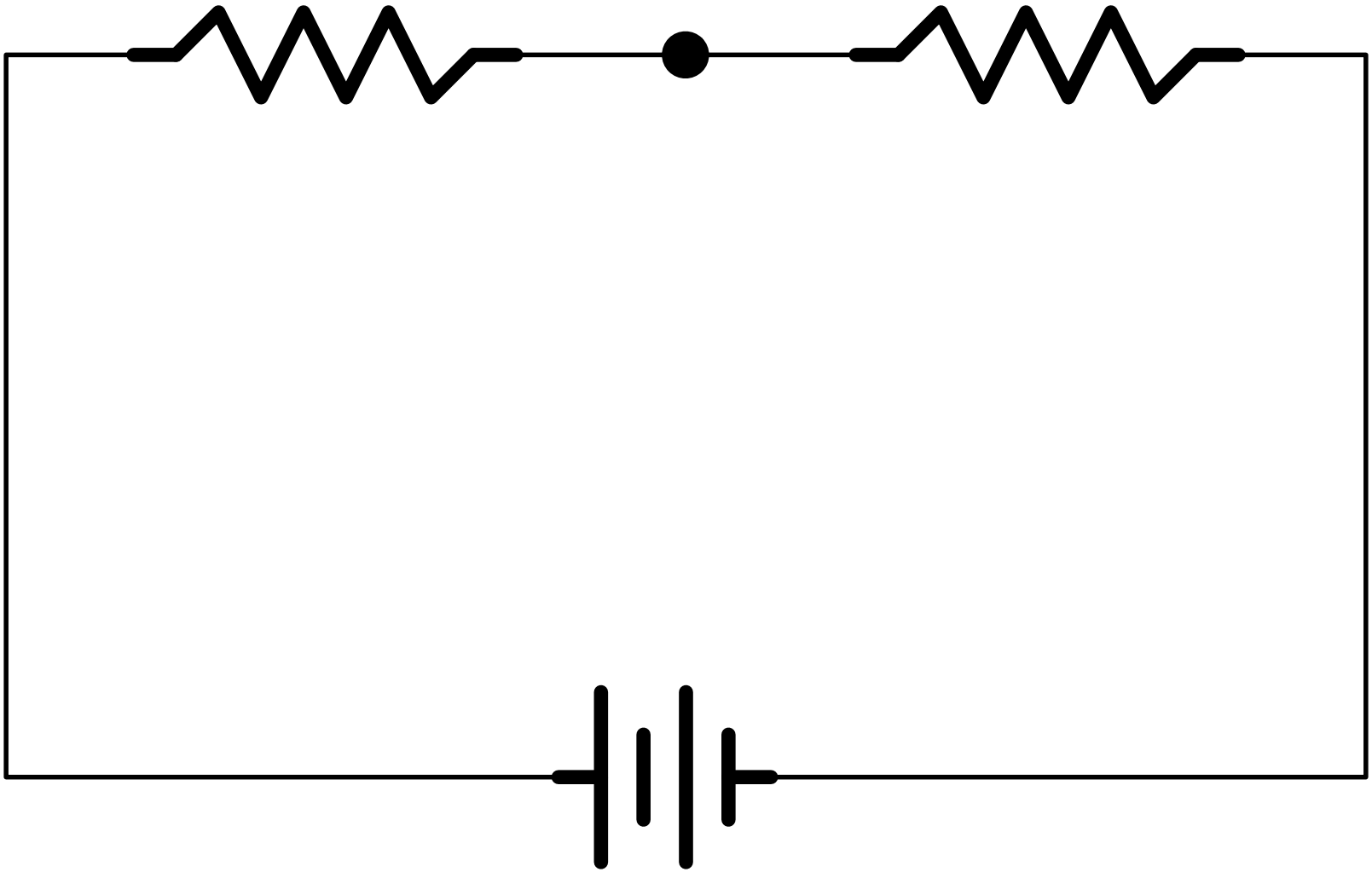

Parallel Circuit

- Components share two nodes

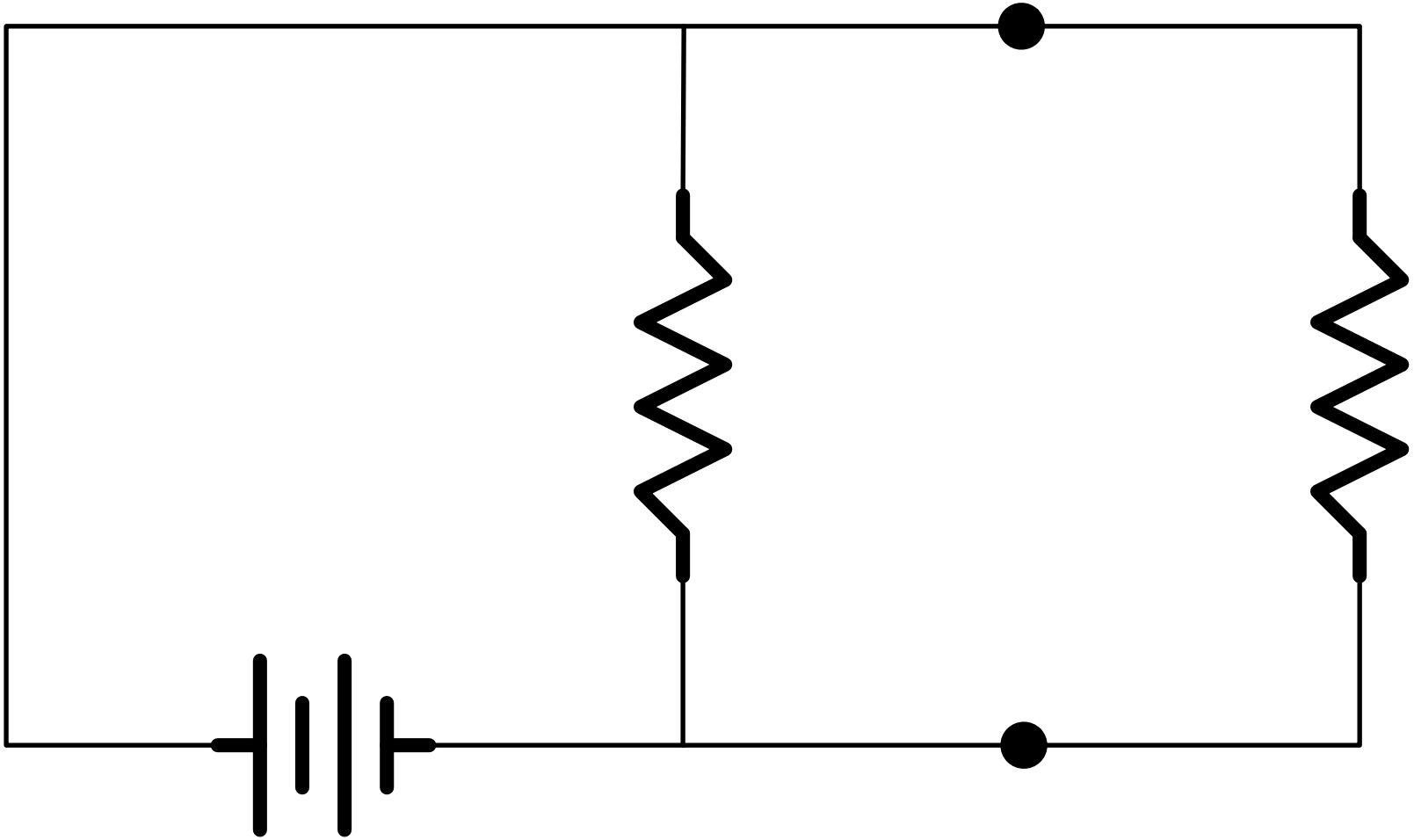

Equivalent Series Circuit

- Two resistors in series
- Harder for current to flow

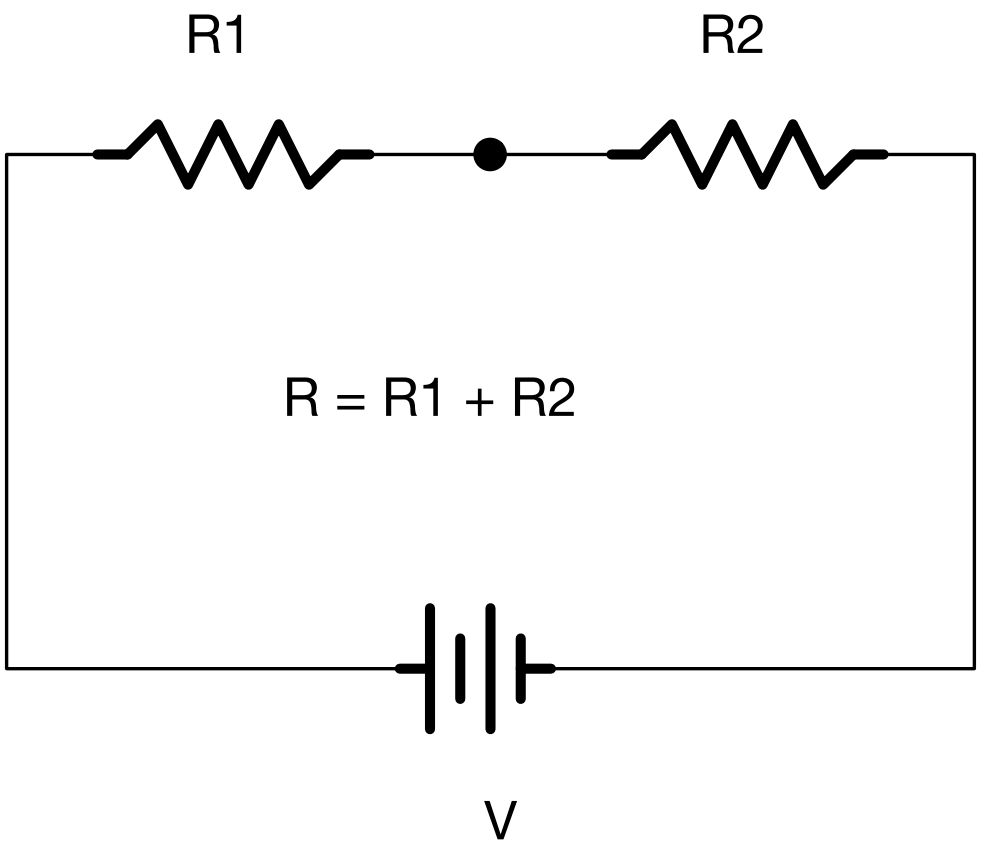

Equivalent Parallel Circuit

- Two paths but same voltage
- Draws more current

$$R = \frac{R1 * R2}{R1 + R2}$$

1/R = 1/R1 + 1/R2

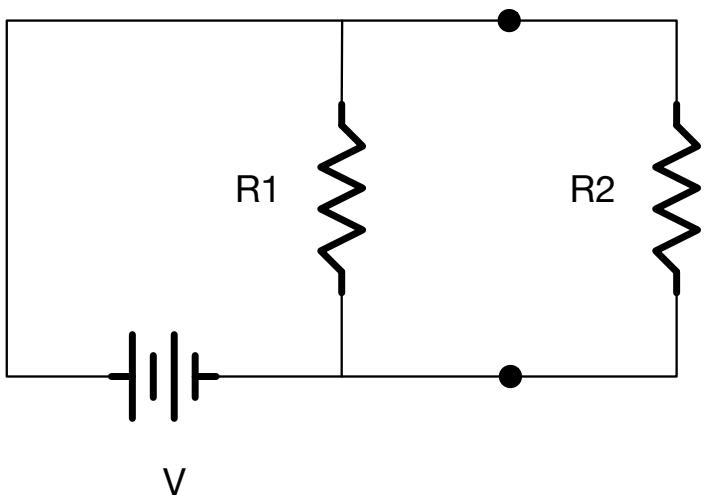

Voltage Divider Circuit

- Two resistors in series with output in middle
- Used as potentiometer
- Used to produce lower voltage (only low power though)

$$V_{in} = I * (R_1 + R_2)$$

$$V_{out} = I * (R_2)$$

$$V_{out} = V_{in} * \frac{R2}{R1 + R2}$$

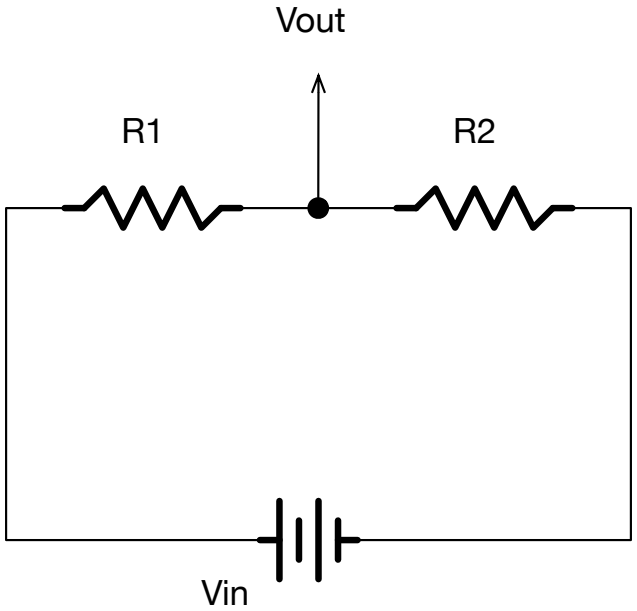

Energy and Power

- Components either consume or produce electric energy
- Energy in Joules
- Voltage is measure of energy that unit charge will dissipate when flowing through device
- Current is number of couloumbs that flow through device in 1 sec
- Power is rate at which energy is dissipated
- Power (P) = joules per second = watts (W) = volts * amps
- $P = VI$
- $P = V^2/R$
- $P = I^2R$

Power Ratings of Resistors

- Some resistors are built to handle larger power drops
- Can calculate power drop based on equations
- Calculate current through resistor: $I = V/R = \frac{5V}{100\Omega} = 0.05A$
- Calculate power: $P = IV = 0.05A * 5V = 0.25W$
- Also $P = V^2/R = I^2R$

Powering Circuits

- Add voltages in series same current
- Add currents in parallel same voltage

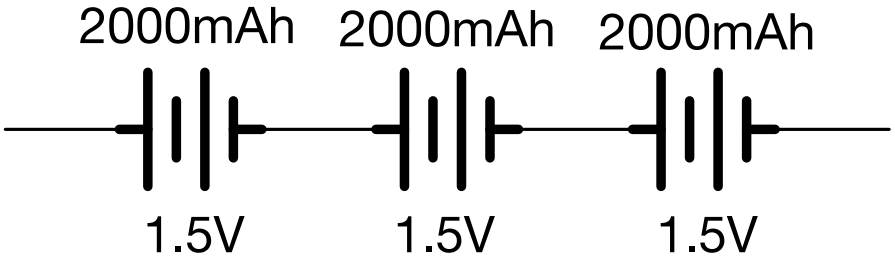

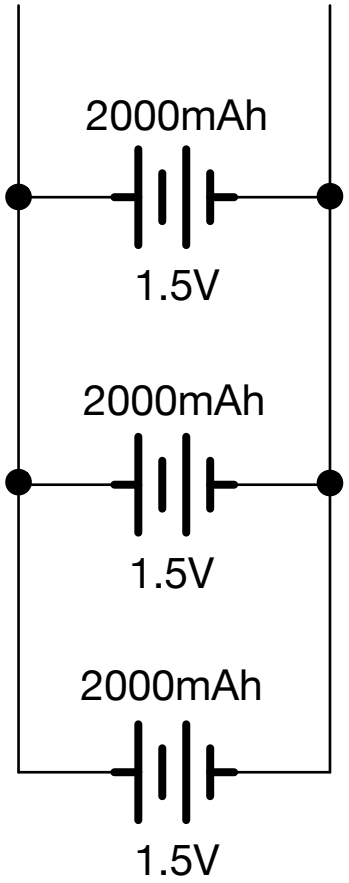

Calculating Power Needs

- Calculate or measure current draw in circuit
- Look up battery capacity in Amp Hours
- Divide capacity by current draw
- Be conservative with capacity

Components

- resistor
- potentiometer
- capacitor
- switch
- diode
- led
- transistor

Resistors

- Slow down current – like rocks in river
- Follow Ohm's law, $V = IR$
- Variable resistors adjusted by force, temperature and knob called potentiometers

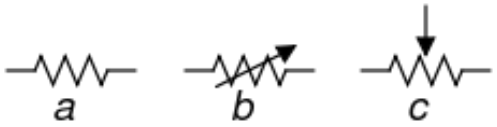

Afrank99

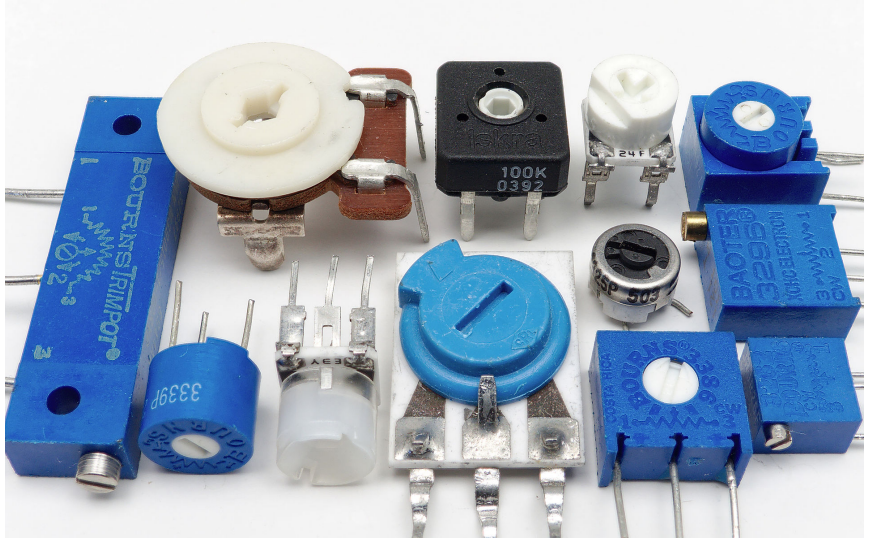

Junkyardsparkle

Different Resistance Values

- Fixed set of values and their powers of 10
- Values 10, 12, 15, 18, 22, 27, 33, 39, 47, 56, 68, and 82
- Color on them codes their value and their accuracy
- Accuracy as deviation like +-1, +-5, +-10
- Can create exact values by adding resistors in series
- Resistors in parallel produce $\frac{r1*r2}{r1+r2}$

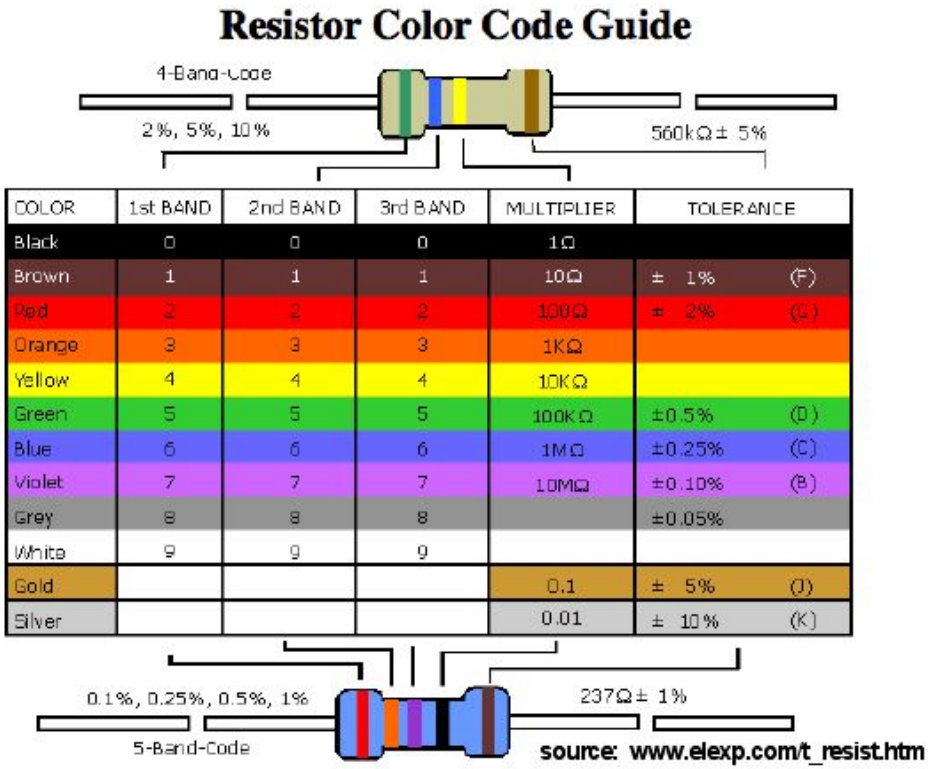

COLOR	1st BAND	2nd BAND	3rd BAND	MULTIPLIER	TOLERANCE	
Black	0	0	0	1Ω		
Brown	1	1	1	10Ω	± 1%	(F)
Red	2	2	2	100Ω	± 2%	(G)
Orange	3	3	3	1KΩ		
Yellow	4	4	4	10KΩ		
Green	5	5	5	100KΩ	±0.5%	(D)
Blue	6	6	6	1MΩ	±0.25%	(C)
Violet	7	7	7	10MΩ	±0.10%	(B)
Grey	8	8	8		±0.05%	
White	9	9	9			
Gold				0.1	± 5%	(J)
Silver				0.01	± 10%	(K)

Pull-up Resistor

- Pulls value up to 5V in default state
- When button depressed input goes to ground
- Value determines how much current flows when pressed
- R2 determines R1 so that Vin is high enough (10x)

$$V_{out} = V_{in}\frac{R2}{R1 + R2} = 5 * \frac{10R}{R + 10R} = 5 * \frac{10}{1 + 10} \approx 5 * 0.9$$

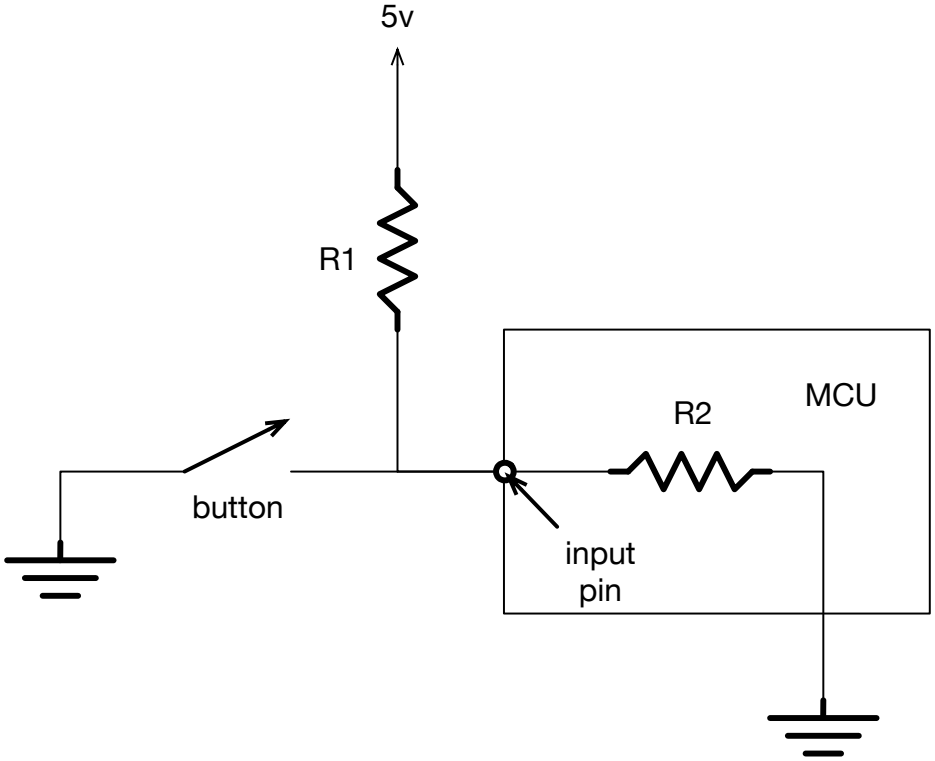

Capacitors

- Two metal plates separated by space
- Essentially they keep voltage constant
- Like a small rechargeable battery
- Measured in farads, F, most common ones in micro farad range
- Non-polarized ones which are weaker and usually ceramic
- Polarized ones are stronger and you need to hook up correctly or they might explode
- Capacitance values add in parallel $c1 + c2$
- Capacitance values inversely add in series $\frac{c1 * c2}{c1 + c2}$

Eric Schrader

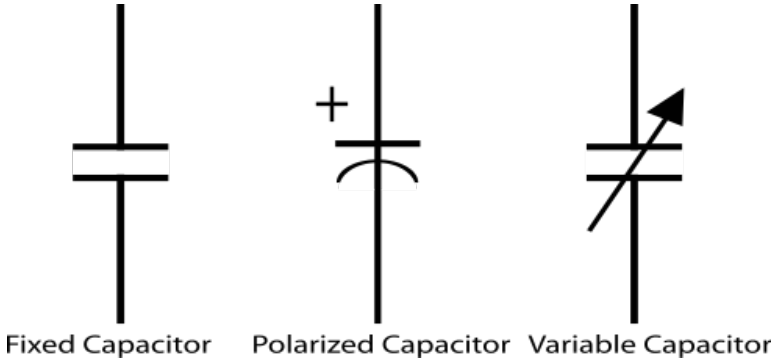

Jwratner1

Uses of Capacitors

- Filter out voltage changes for remove noise
- Decoupling capacitors near ICs
- Debouncing buttons
- Energy storage

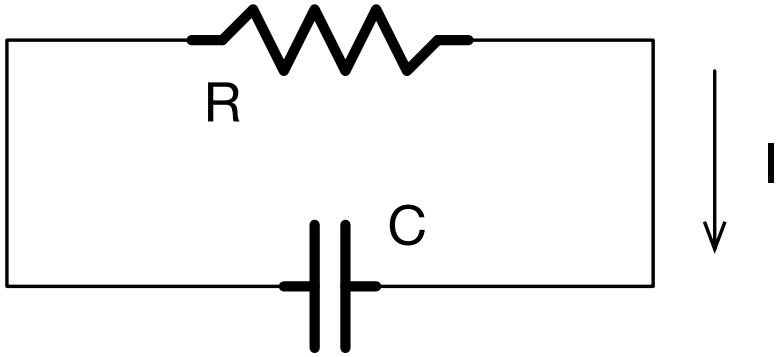

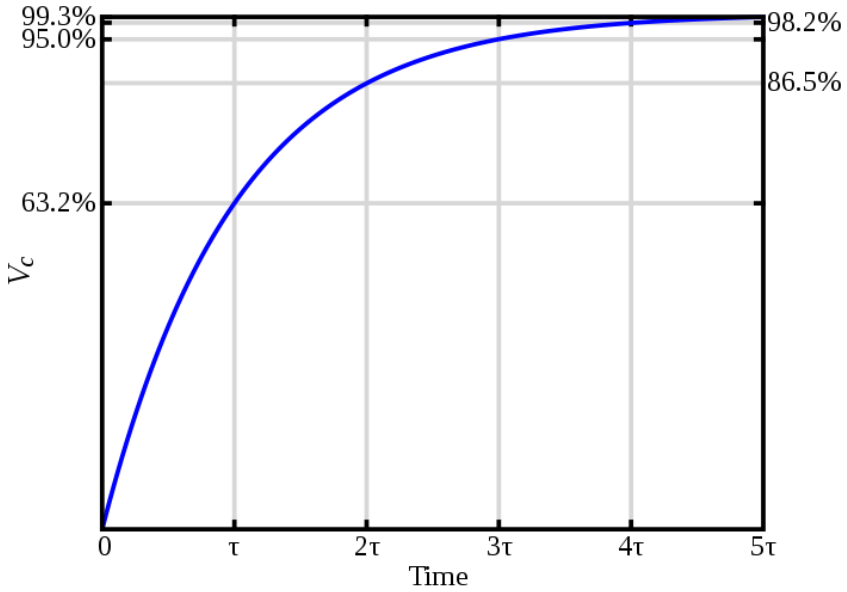

Ktims

Capacitor Safety

- Beware as capacitors hold onto charge and can be dangerous when high voltage

Philippe Mertens

Diodes

- Make sure that current goes only one way
- Avoid reverse voltage or voltage spikes
- The current follows the arrows direction
- LEDs are actually diodes (also laser diodes)
- Have non zero voltage drop
- Breakdown voltage is reverse voltage when diode fails

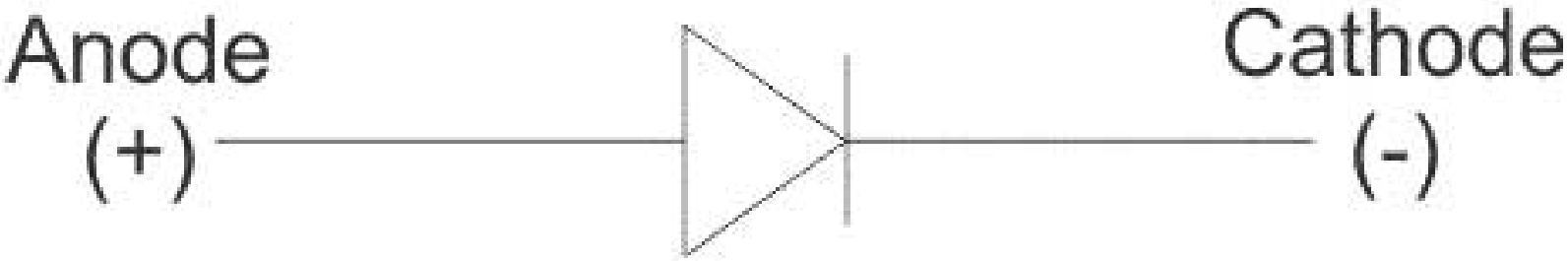

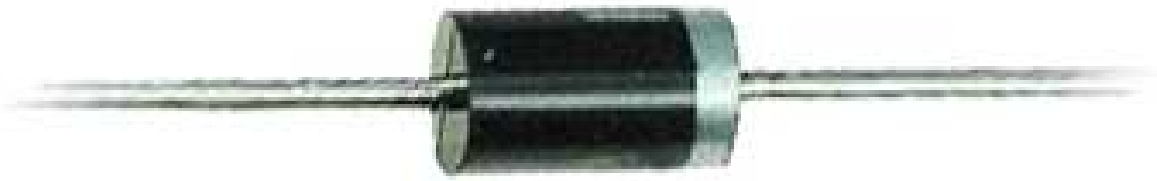

Diodes IV Curve

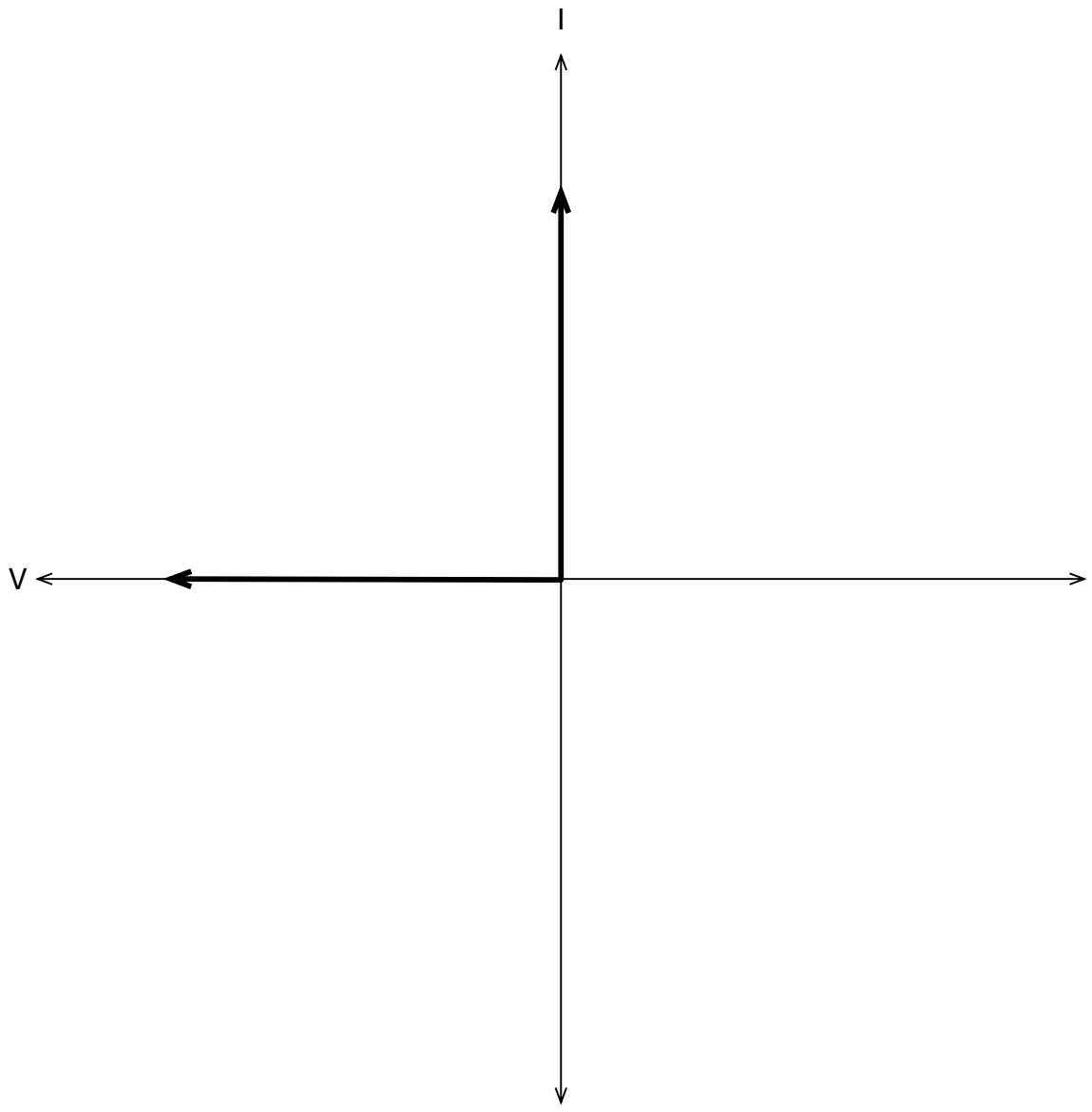

Real Diode IV Curve

Diode Uses

- Used to prevent voltage spikes and reverse voltages
- Example: Protect against batteries inserted incorrectly
- Example: Prevent voltage spikes from solenoids + motors
- Can rectify signal
- Example: change AC to DC

LEDs

- Have voltage drop
- Have current operating range
- Pins can source 20mA
- Can use multiple pins to source more current

piccolo namek

Transistors

-

- Electrical switches controlled by a voltage applied to third terminal
- Base is switch control, collector is in, and emittor is out
- Can switch moderate power components with low voltage signal
- Threshold voltage controls switch
- NMOS turns on when above threshold
- PMOS turns on when below threshold

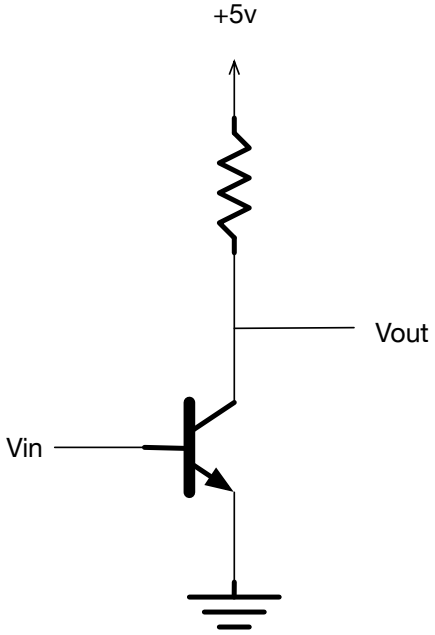

Transistor Uses

- Using transistor for switching higher voltage higher current
- First example is a higher power LED
- Second example is a high voltage motor

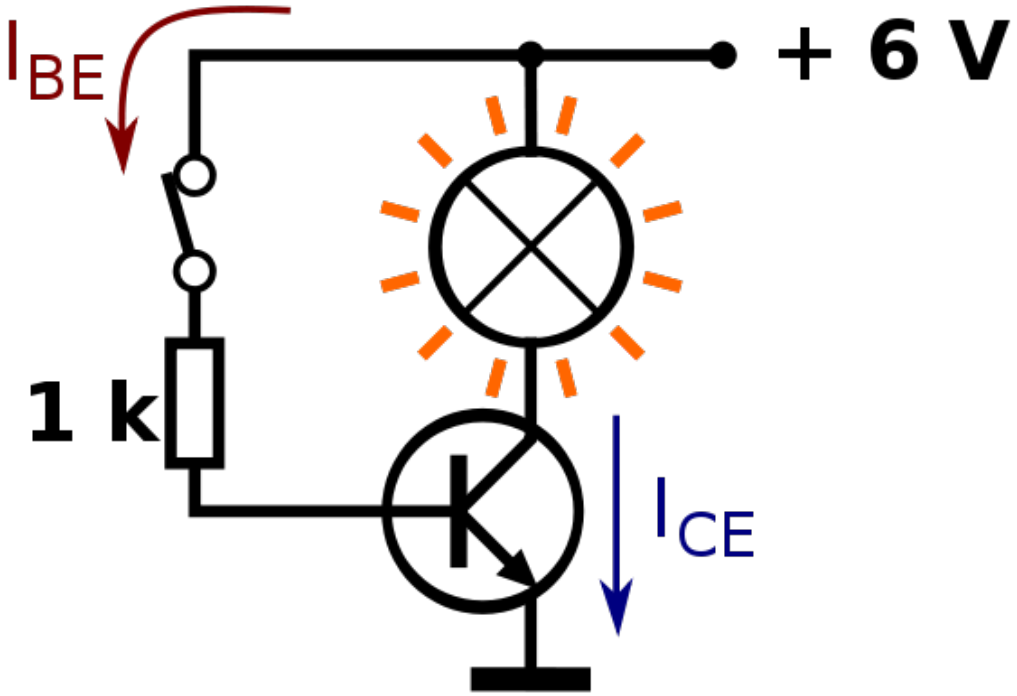

Physical Switches

- Either Normally Closed (NC) or Normally Open (NO)
- Pole is a set of contacts or independent circuits
- Throw determines number of positions it can be in
- SPST is single pole single throw
- DPST is double pole single throw

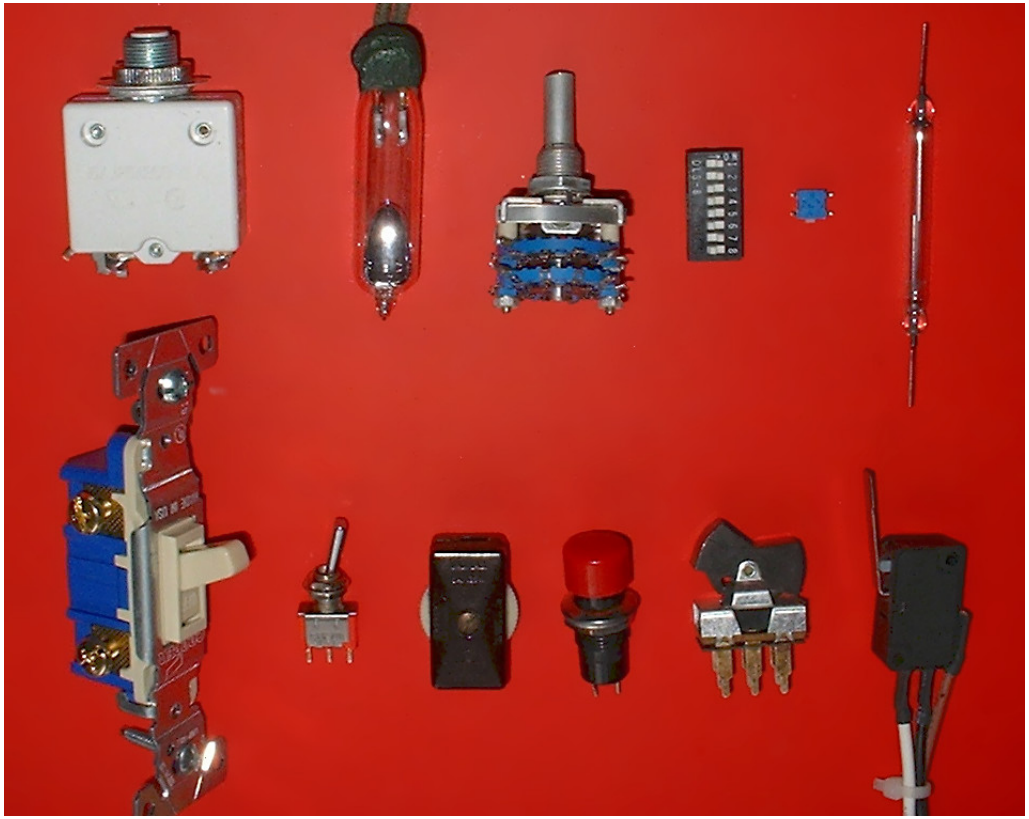

Example Switches

SPST	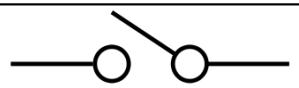
SPDT	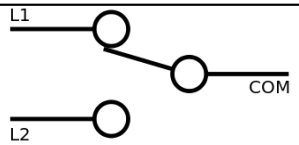
DPST	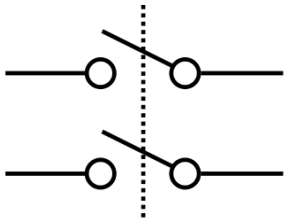
DPDT	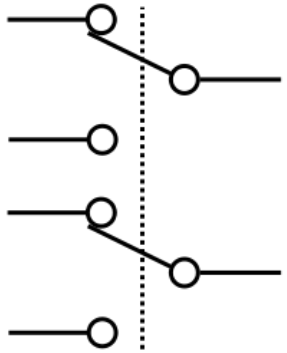

lainf

Multimeters and Measurements

- Multimeters can measure resistance, voltage, current and continuity
- Continuity determines if two points are connected – mode with beep
- Resistance can be measured in unpowered circuit using Ω setting
- Voltage can be measured in powered circuit by putting probes in parallel with circuit
- Current can be measured in series
- Make sure not to exceed current limits of multimeter
- Debug using continuity and voltage checks to compare against circuit diagram

Multimeter Usage

mode	function
dc volts	measure voltage between probes
dc current	measure current flowing through probes
resistance	measures resistance bteween probes
continuity	checks if probed points are electrically connected
diodes	measures voltage drop across a diode – continuity mode

Reading Datasheet

- Datasheet is like user manual for component
- Find through vendor webpage or googling part number + datasheet
- Reading pinout to find out what pins do and where they are
- Top left is pin 1
- Electrical parameters say max supply voltage (Vss is ground) and input current, temperature
- Exceeding limits will break component

ELECTRICAL CHARACTERISTICS (T_{amb} = 25 °C, unless otherwise specified)

PARAMETER	TEST CONDITION	SYMBOL	MIN.	TYP.	MAX.	UNIT
Forward voltage	I_F = 10 mA	V_F			1000	mV
Reverse current	V_R = 20 V	I_R			25	nA
	V_R = 20 V, T_j = 150 °C	I_R			50	µA
	V_R = 75 V	I_R			5	µA
Breakdown voltage	I_R = 100 µA, t_p/T = 0.01, t_p = 0.3 ms	$V_{(BR)}$	100			V
Diode capacitance	V_R = 0 V, f = 1 MHz, V_{HF} = 50 mV	C_D			4	pF
Rectification effiency	V_{HF} = 2 V, f = 100 MHz	η_r	45			%
Reverse recovery time	$I_F = I_R$ = 10 mA, i_R = 1 mA	t_{rr}			8	ns
	I_F = 10 mA, V_R = 6 V, i_R = 0.1 x I_R, R_L = 100 Ω	t_{rr}			4	ns

ABSOLUTE MAXIMUM RATINGS (T_{amb} = 25 °C, unless otherwise specified)

PARAMETER	TEST CONDITION	SYMBOL	VALUE	UNIT
Repetitive peak reverse voltage		V_{RRM}	100	V
Reverse voltage		V_R	75	V
Peak forward surge current	t_p = 1 µs	I_{FSM}	2	A
Repetitive peak forward current		I_{FRM}	500	mA
Forward continuous current		I_F	300	mA
Average forward current	V_R = 0	$I_{F(AV)}$	150	mA
Power dissipation	l = 4 mm, T_L = 45 °C	P_{tot}	440	mW
	l = 4 mm, $T_L \leq$ 25 °C	P_{tot}	500	mW

Sizing Resistor for LED

- Voltage drop across LED say 1.7V
- Need certain current to drive LED and too much will destroy it
- Want to match voltage drop by taking up remainder by resistor
- Calculate using Ohm's law:
  $R = V/I = (5V - 1.7V)/0.2A = 3.3V/0.2A = 66\Omega$
- Pins can drive up to 20mA
- Use transistors for more

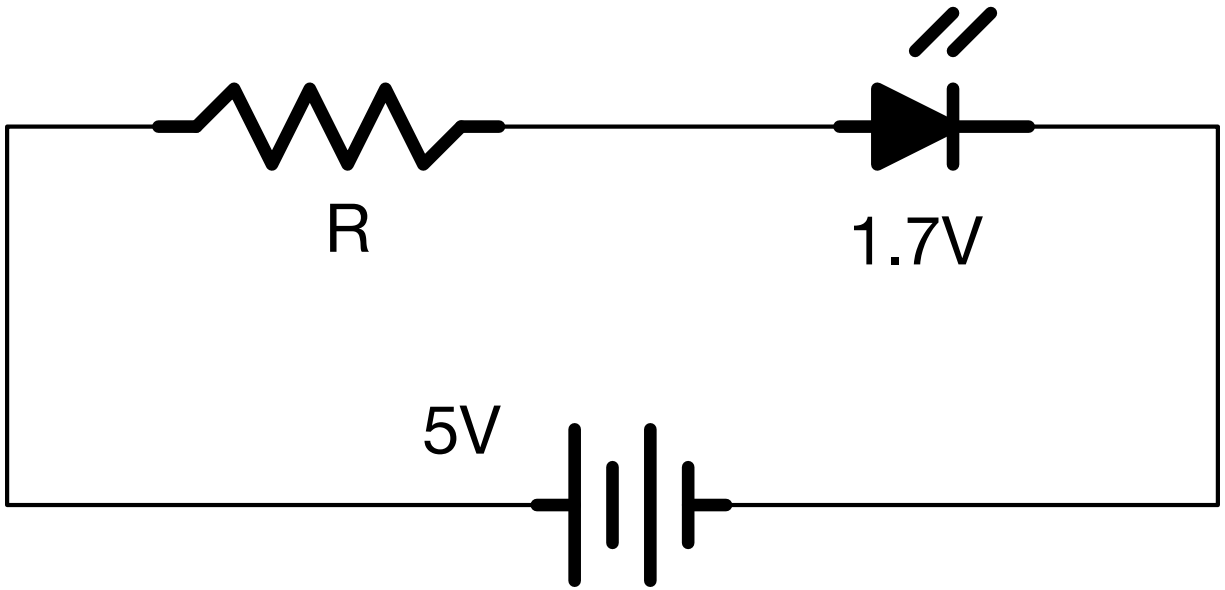

Potentiometer Usage

- Want non-zero range of resistor values for reasonable currents but
- Potentiometer goes to zero
- What circuit handles this?

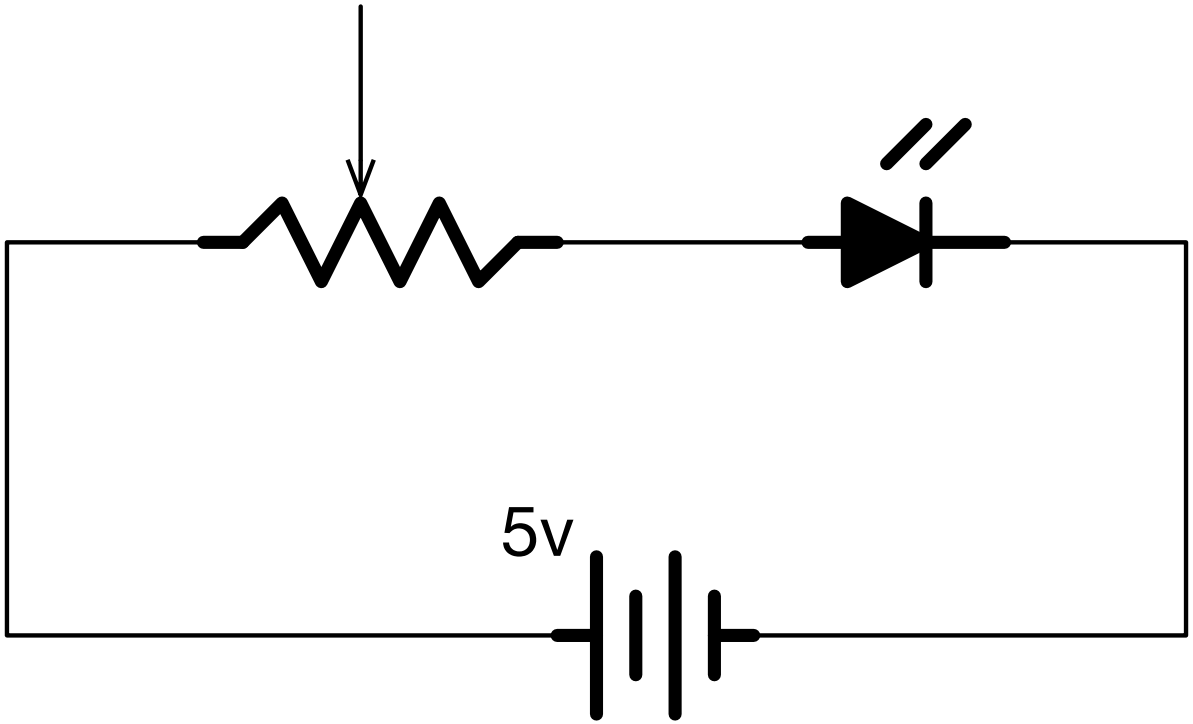

Electrical Safey

- Current is what kills you not voltage
- Current above 15 to 100mA AC is lethal
- Still can get burned without getting electrocuted
- Shut off things that shocked person before giving first aid
- Don't allow yourself to become connection between a live wire and ground especially through heart
- Circuits can be damaged by too much current or voltage
  - electrostatic discharge (ESD) will damage or destroy sensitive circuit components
  - polarized components may explode if reversed

Logistics

- Milling lab due Thursday
- Soldering lab out Thursday

Next Time

- Communication Protocols
- JITPCB Circuit Design

References

- Calsol – basic electronics lab
- `learn.sparkfun.com`