inst.eecs.berkeley.edu/~cs61c

CS61C : Machine Structures

Lecture #21
State Elements: Circuits that Remember

2008-3-14

Scott Beamer, Guest Lecturer

3.14159265358979323
84626433832795028841971693993751058209
74944592307816406286208998628034825342117067982148086513282306647093
84460955058223172535940812848111745028410270193852110555964462294895

www.piday.org

Beamer, Spring 2008 © UCB

Review

- ISA is very important abstraction layer
  - Contract between HW and SW
- Clocks control pulse of our circuits
- Voltages are analog, quantized to 0/1
- Circuit delays are fact of life
- Two types of circuits:
  - Stateless Combinational Logic (&,|,~)
  - State circuits (e.g., registers)

Beamer, Spring 2008 © UCB

Uses for State Elements

1. As a place to store values for some indeterminate amount of time:
   - Register files (like $1-$31 on the MIPS)
   - Memory (caches, and main memory)
2. Help control the flow of information between combinational logic blocks.
   - State elements are used to hold up the movement of information at the inputs to combinational logic blocks and allow for orderly passage.

Beamer, Spring 2008 © UCB

Accumulator Example

Why do we need to control the flow of information?

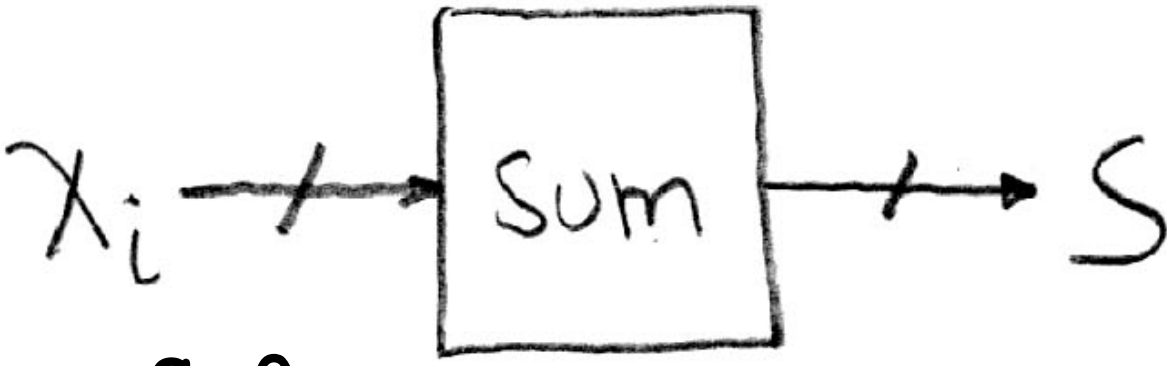

Want:

```
S=0;
for (i=0;i<n;i++)
    S = S + Xi
```

Assume:

- Each X value is applied in succession, one per cycle.
- After n cycles the sum is present on S.

Beamer, Spring 2008 © UCB

First try…Does this work?

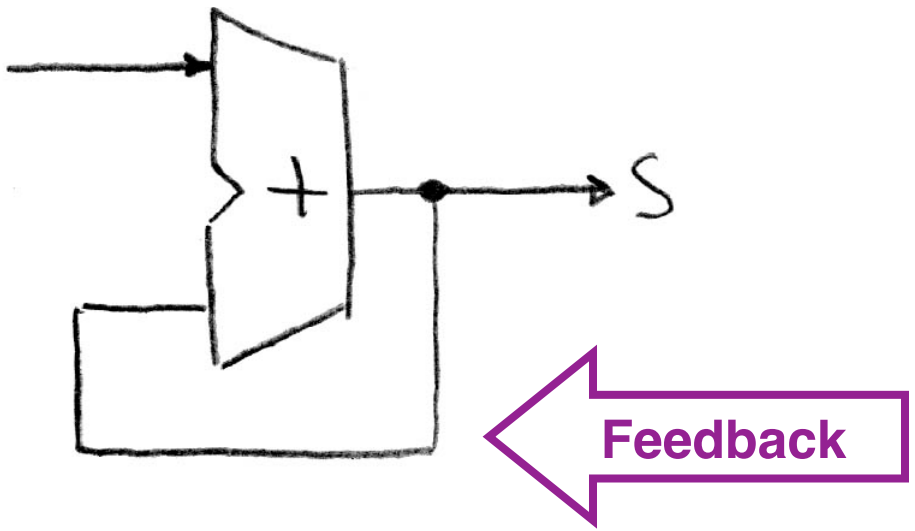

Nope!

Reason #1… What is there to control the next iteration of the '`for`' loop?

Reason #2… How do we say: '`S=0`'?

Beamer, Spring 2008 © UCB

Second try…How about this?

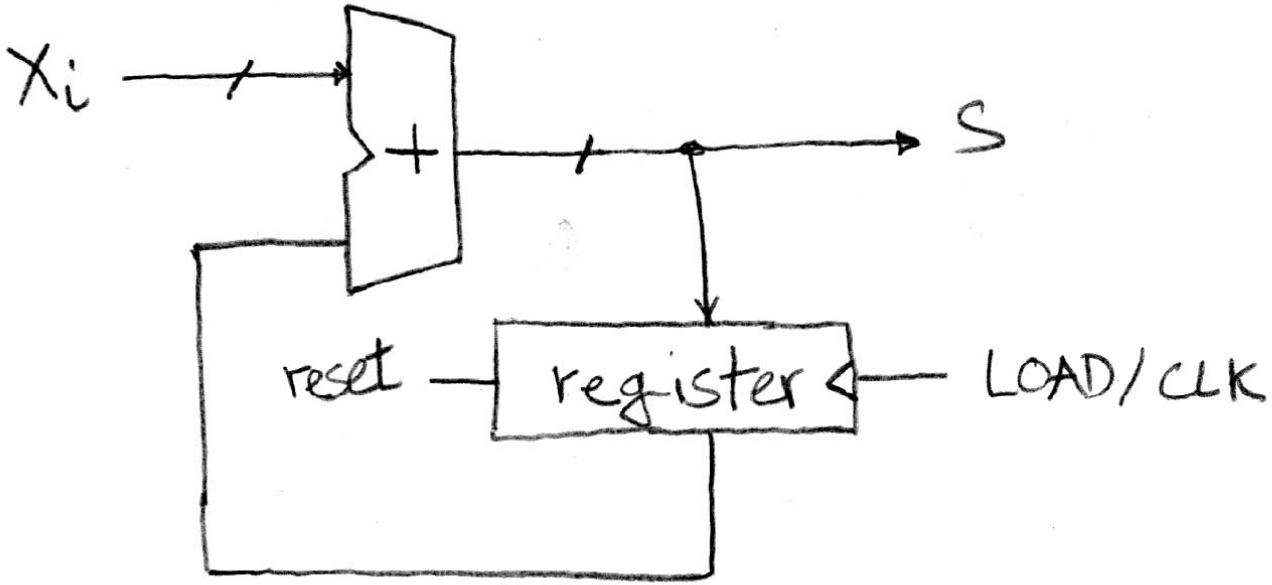

Rough timing…

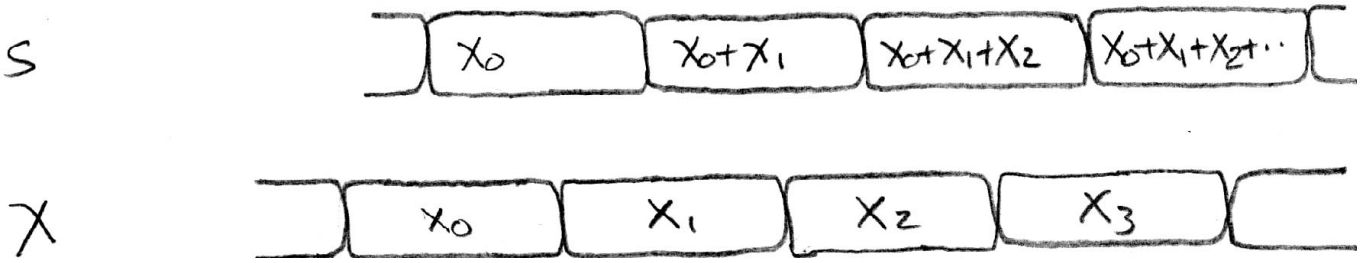

Register is used to hold up the transfer of data to adder.

Beamer, Spring 2008 © UCB

Register Details…What's inside?

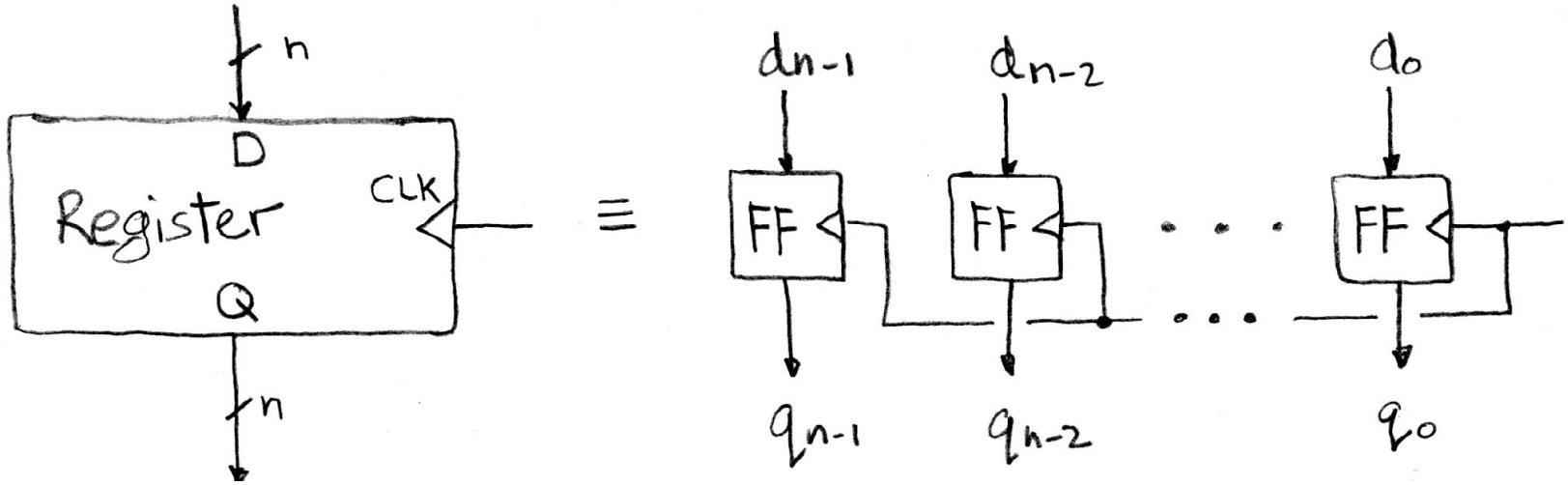

- n instances of a "Flip-Flop"
- Flip-flop name because the output flips and flops between and 0,1
- D is "data", Q is "output"
- Also called "d-type Flip-Flop"

Beamer, Spring 2008 © UCB

What's the timing of a Flip-flop? (1/2)

- **Edge-triggered d-type flip-flop**
  - **This one is "positive edge-triggered"**

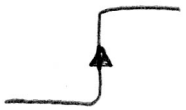

- **"On the rising edge of the clock, the input d is sampled and transferred to the output. At all other times, the input d is ignored."**
- **Example waveforms:**

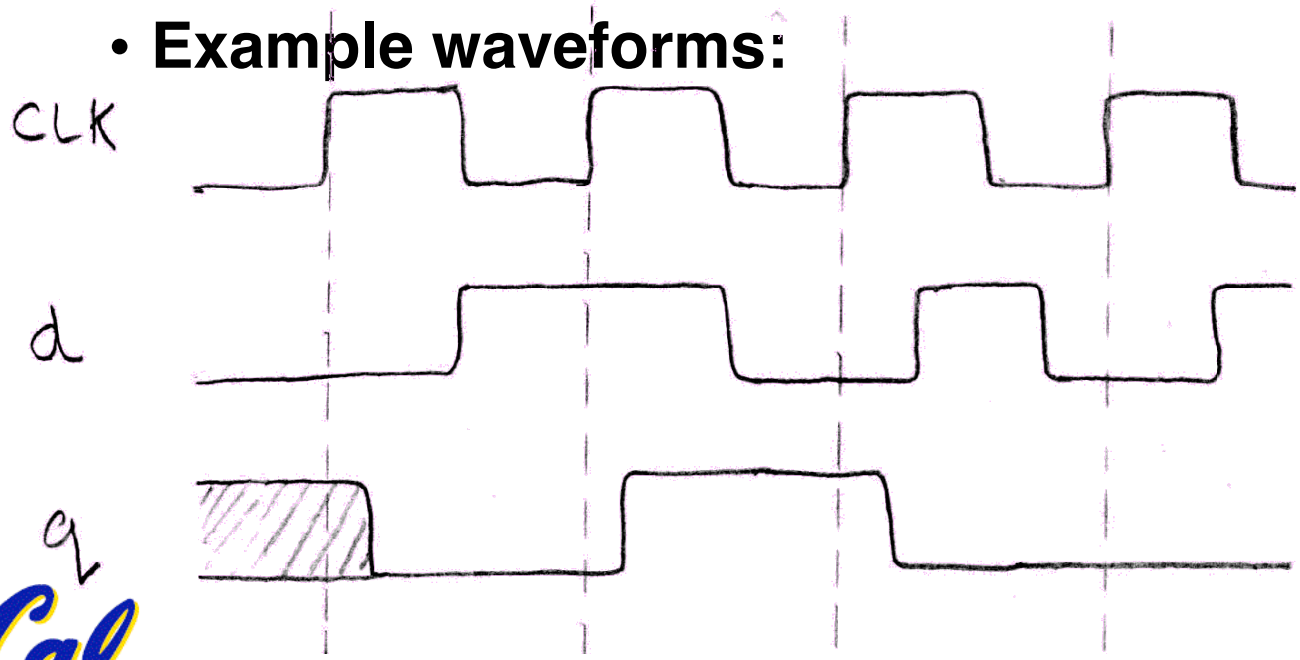

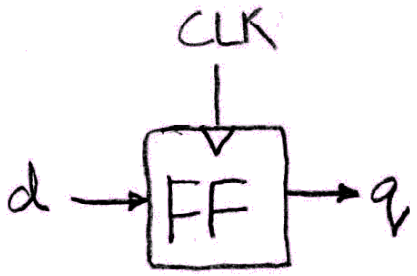

Beamer, Spring 2008 © UCB

What's the timing of a Flip-flop? (2/2)

- **Edge-triggered d-type flip-flop**
  - **This one is "positive edge-triggered"**

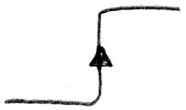

- **"On the rising edge of the clock, the input d is sampled and transferred to the output. At all other times, the input d is ignored."**
- **Example waveforms (more detail):**

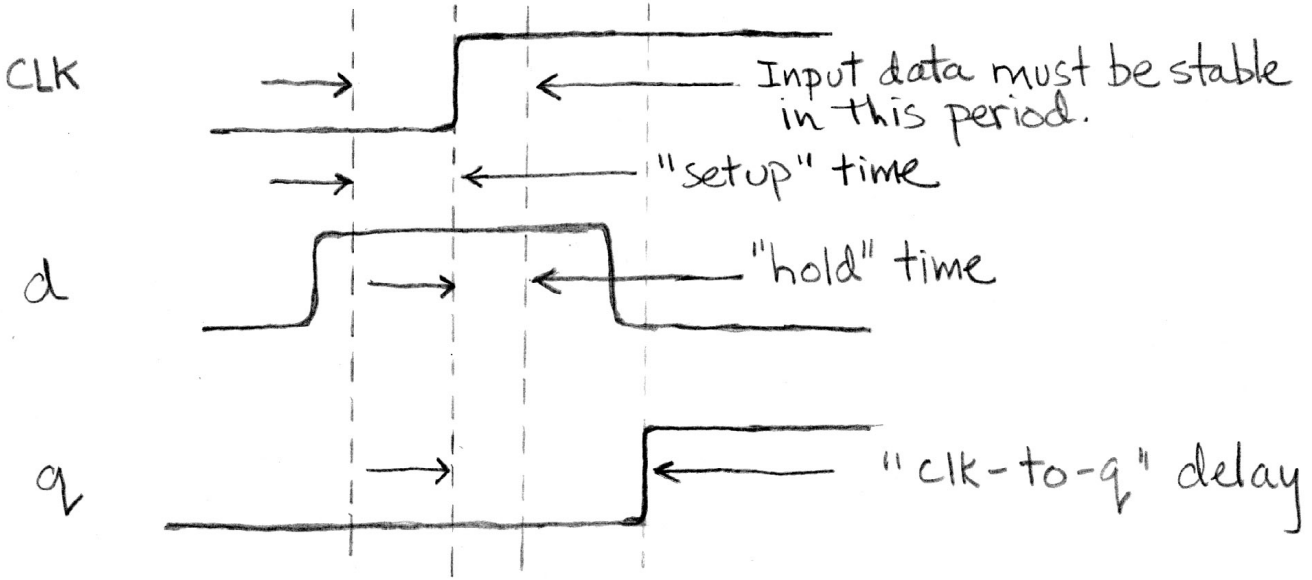

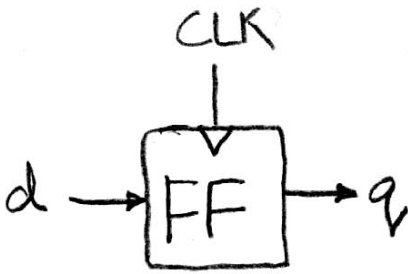

Beamer, Spring 2008 © UCB

Accumulator Revisited (proper timing 1/2)

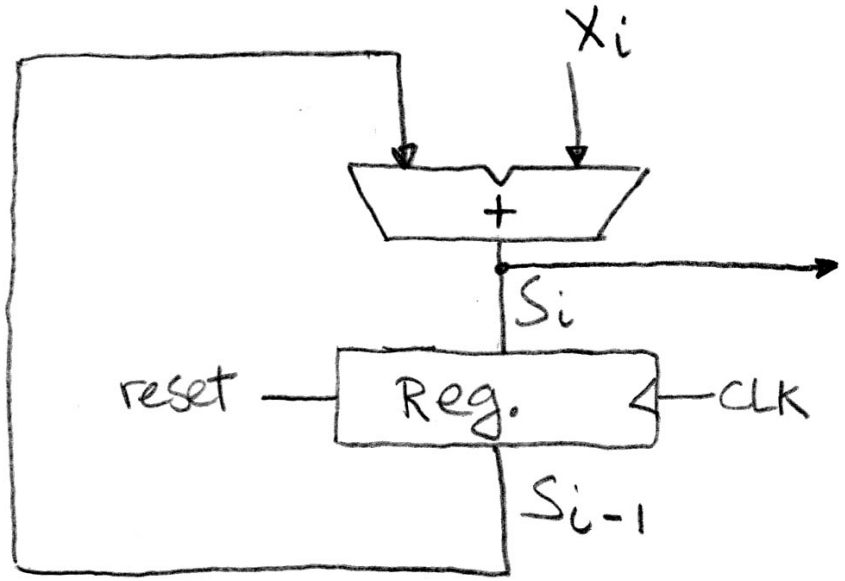

- Reset input to register is used to force it to all zeros (takes priority over D input).
- S_{i-1} holds the result of the ith-1 iteration.
- Analyze circuit timing starting at the output of the register.

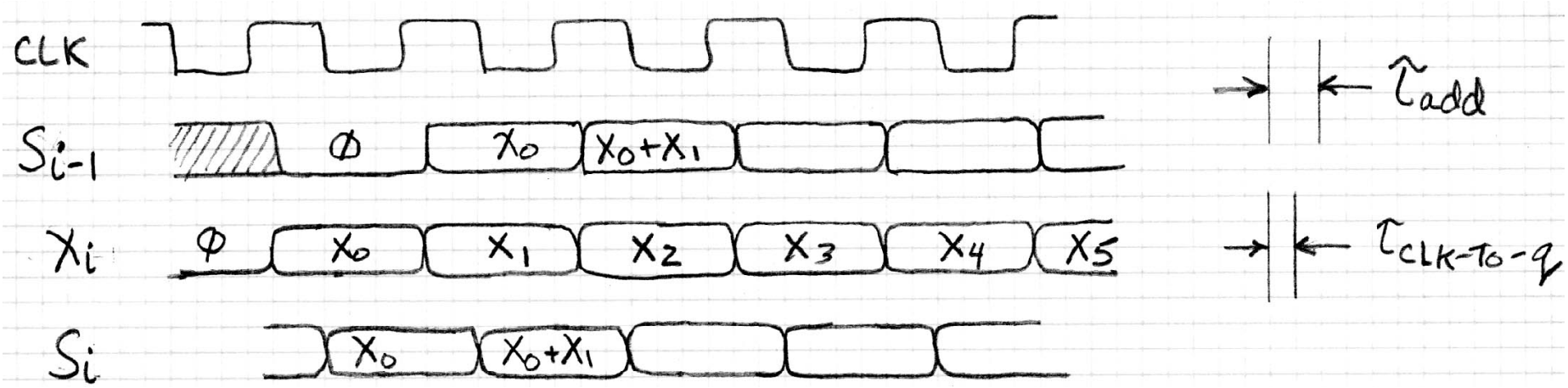

Beamer, Spring 2008 © UCB

Accumulator Revisited (proper timing 2/2)

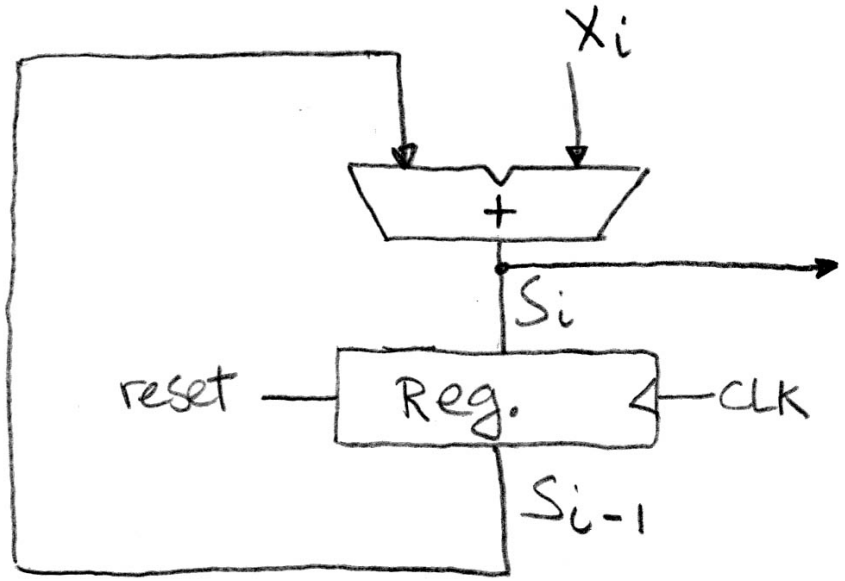

- reset signal shown.
- Also, in practice X might not arrive to the adder at the same time as S_{i-1}
- S_i temporarily is wrong, but register always captures correct value.
- In good circuits, instability never happens around rising edge of clk.

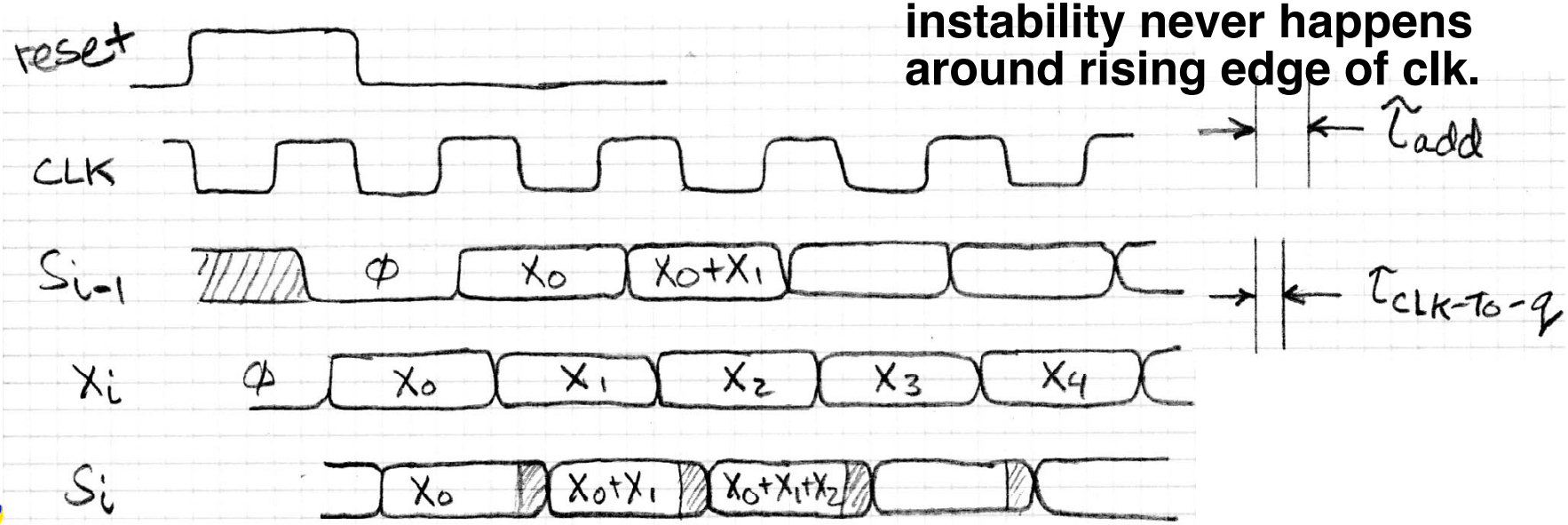

Beamer, Spring 2008 © UCB

Maximum Clock Frequency

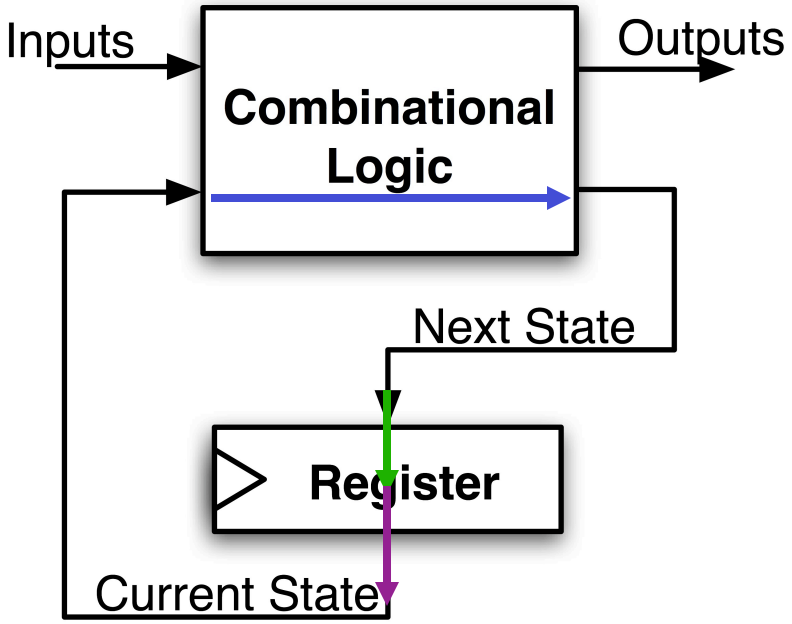

- What is the maximum frequency of this circuit?

Max Delay = Setup Time + CLK-to-Q Delay + CL Delay

Beamer, Spring 2008 © UCB

Pipelining to improve performance (1/2)

Extra Register are often added to help speed up the clock rate.

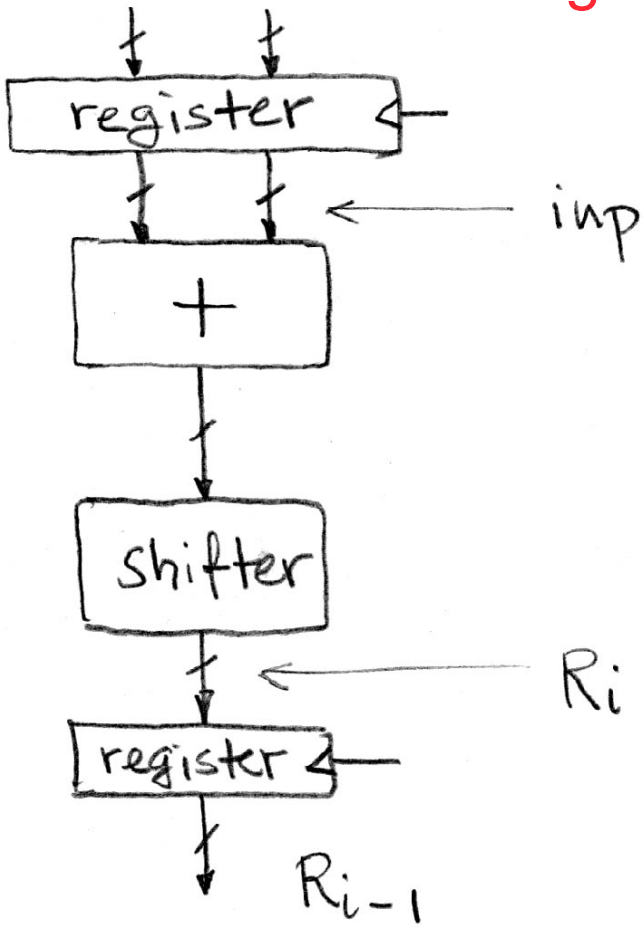

Timing…

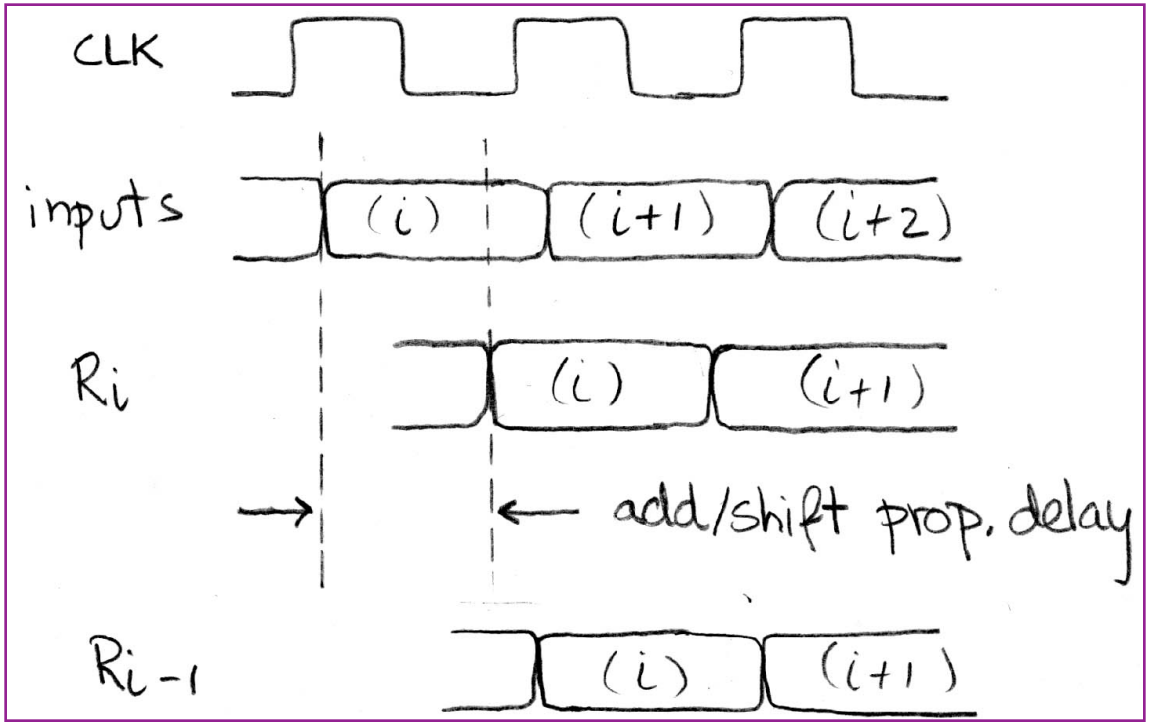

Note: delay of 1 clock cycle from input to output.
Clock period limited by propagation delay of adder/shifter.

Beamer, Spring 2008 © UCB

Pipelining to improve performance (2/2)

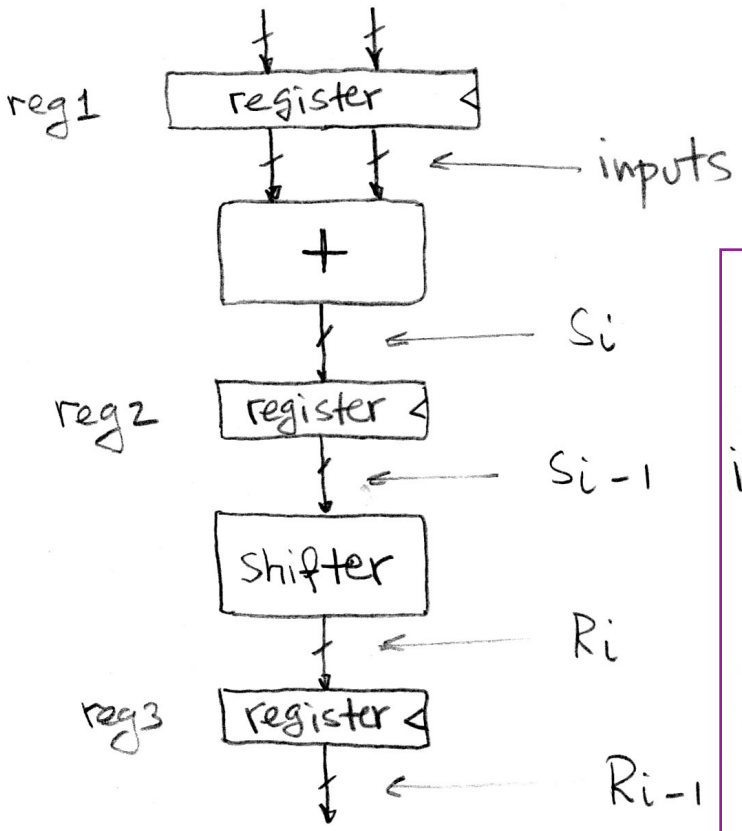

- Insertion of register allows higher clock frequency.
- More outputs per second.

Timing…

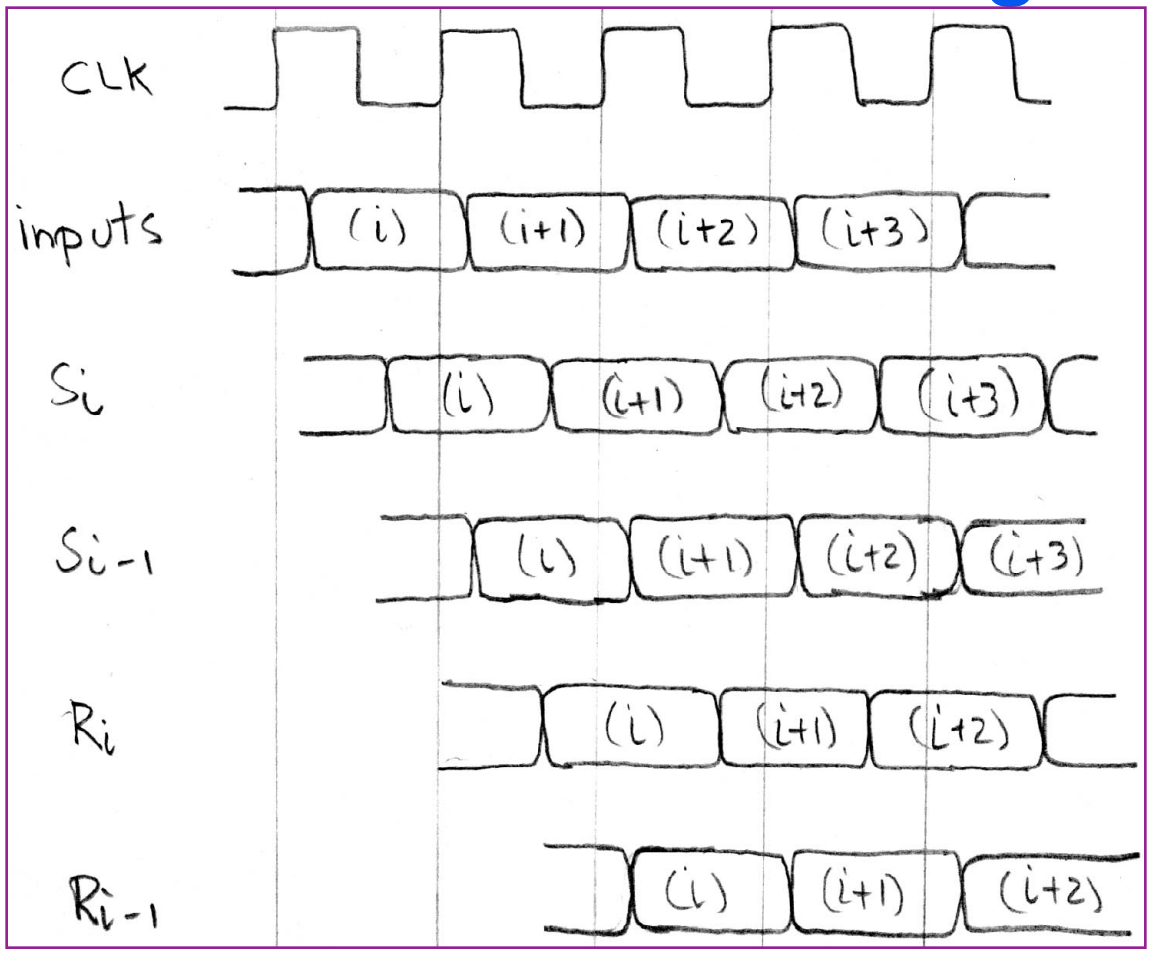

Beamer, Spring 2008 © UCB

Recap of Timing Terms

- **Clock (CLK)** - steady square wave that synchronizes system
- **Setup Time** - when the input must be stable before the rising edge of the CLK
- **Hold Time** - when the input must be stable after the rising edge of the CLK
- **"CLK-to-Q" Delay** - how long it takes the output to change, measured from the rising edge
- **Flip-flop** - one bit of state that samples every rising edge of the CLK
- **Register** - several bits of state that samples on rising edge of CLK or on LOAD

Beamer, Spring 2008 © UCB

Finite State Machines (FSM) Introduction

- You have seen FSMs in other classes.
- Same basic idea.
- The function can be represented with a "state transition diagram".
- With combinational logic and registers, any FSM can be implemented in hardware.

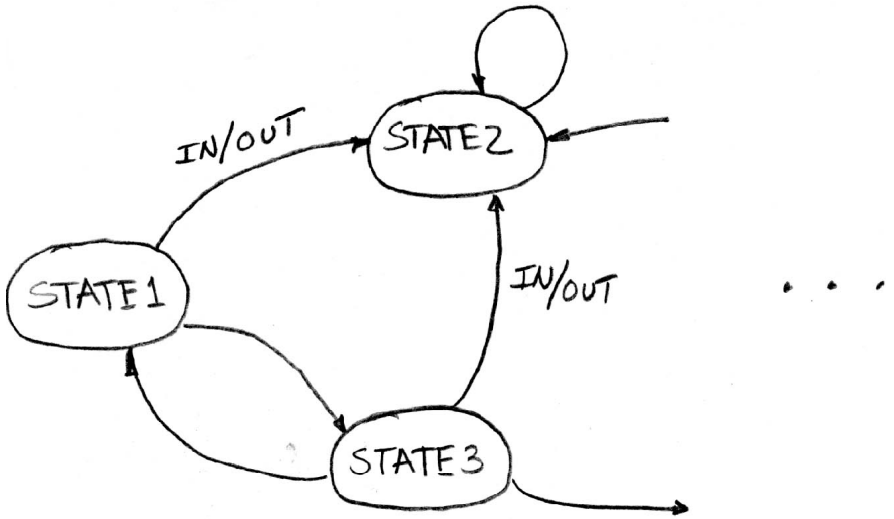

Beamer, Spring 2008 © UCB

Finite State Machine Example: 3 ones…

FSM to detect the occurrence of 3 consecutive 1's in the input.

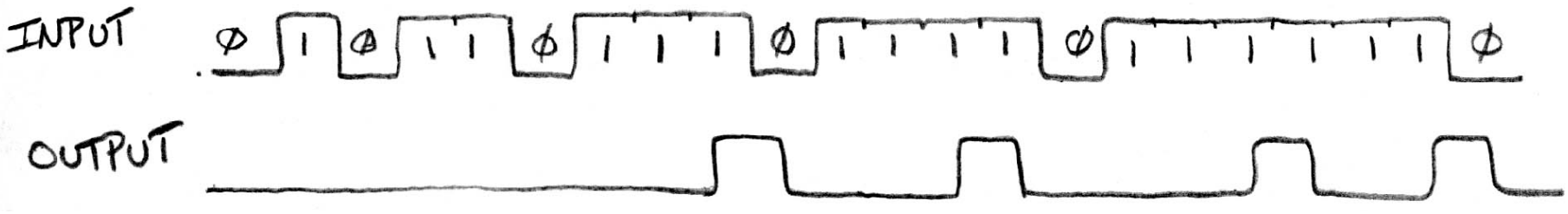

Draw the FSM…

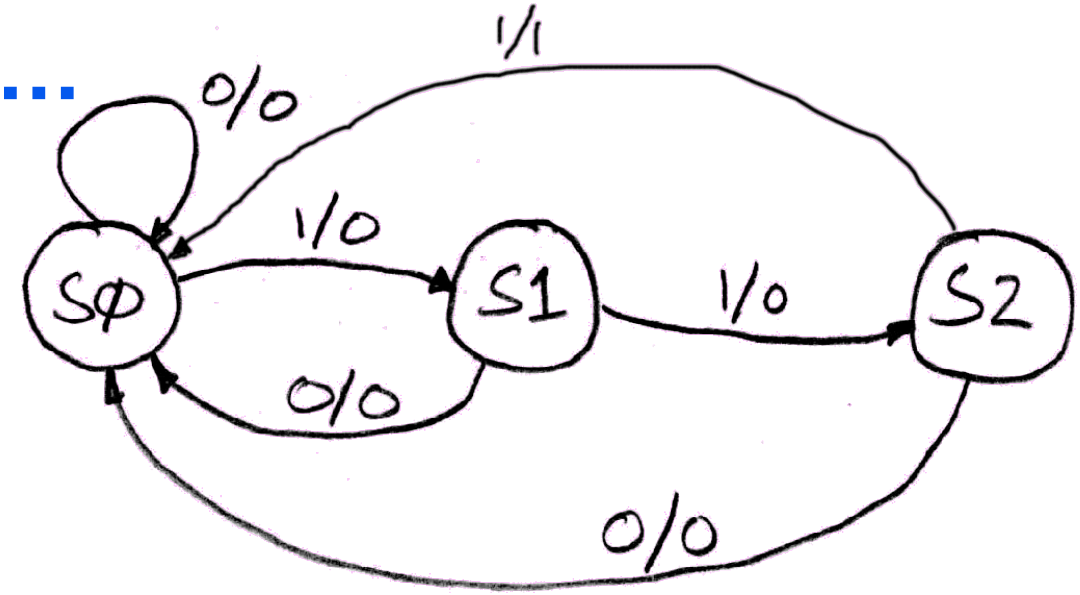

Assume state transitions are controlled by the clock:
on each clock cycle the machine checks the inputs and moves to a new state and produces a new output…

Beamer, Spring 2008 © UCB

Hardware Implementation of FSM

… Therefore a register is needed to hold the a representation of which state the machine is in. Use a unique bit pattern for each state.

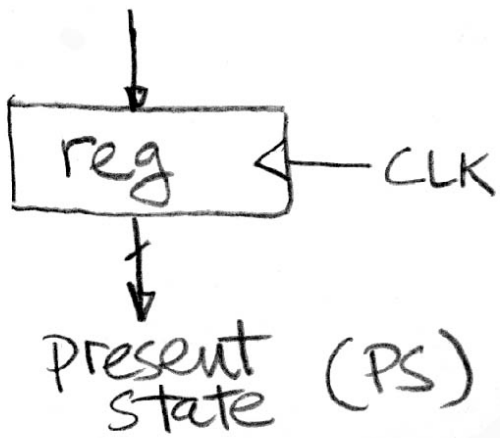

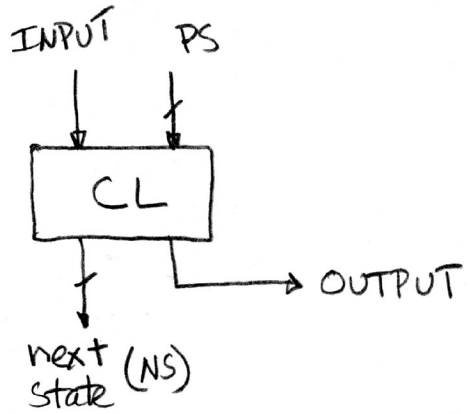

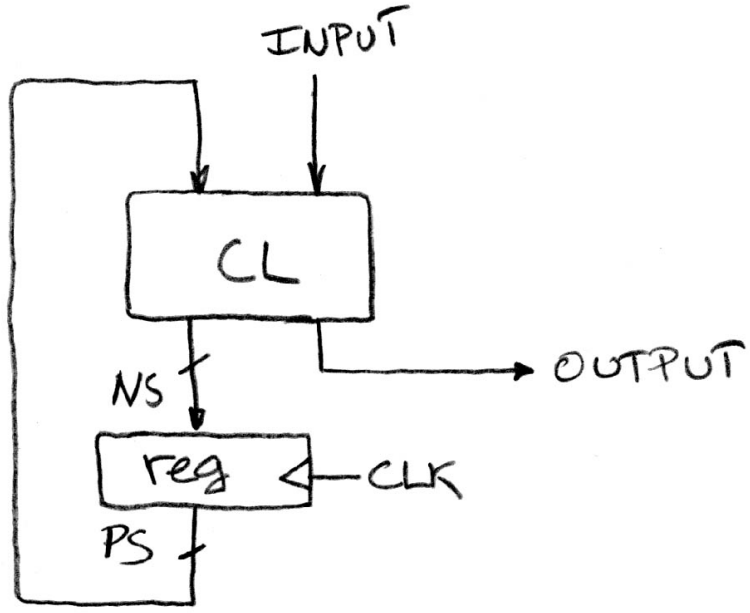

Combinational logic circuit is used to implement a function maps from *present state and input* to *next state and output.*

Beamer, Spring 2008 © UCB

Hardware for FSM: Combinational Logic

Next lecture we will discuss the detailed implementation, but for now can look at its functional specification, truth table form.

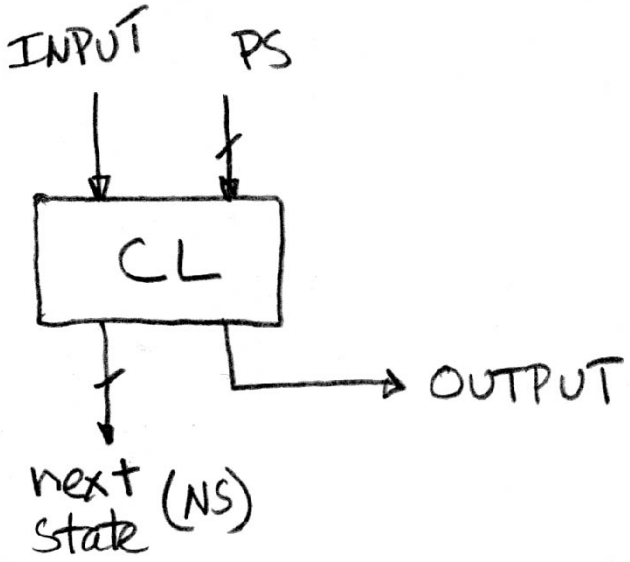

Truth table…

PS	Input	NS	Output
00	0	00	0
00	1	01	0
01	0	00	0
01	1	10	0
10	0	00	0
10	1	00	1

Beamer, Spring 2008 © UCB

General Model for Synchronous Systems

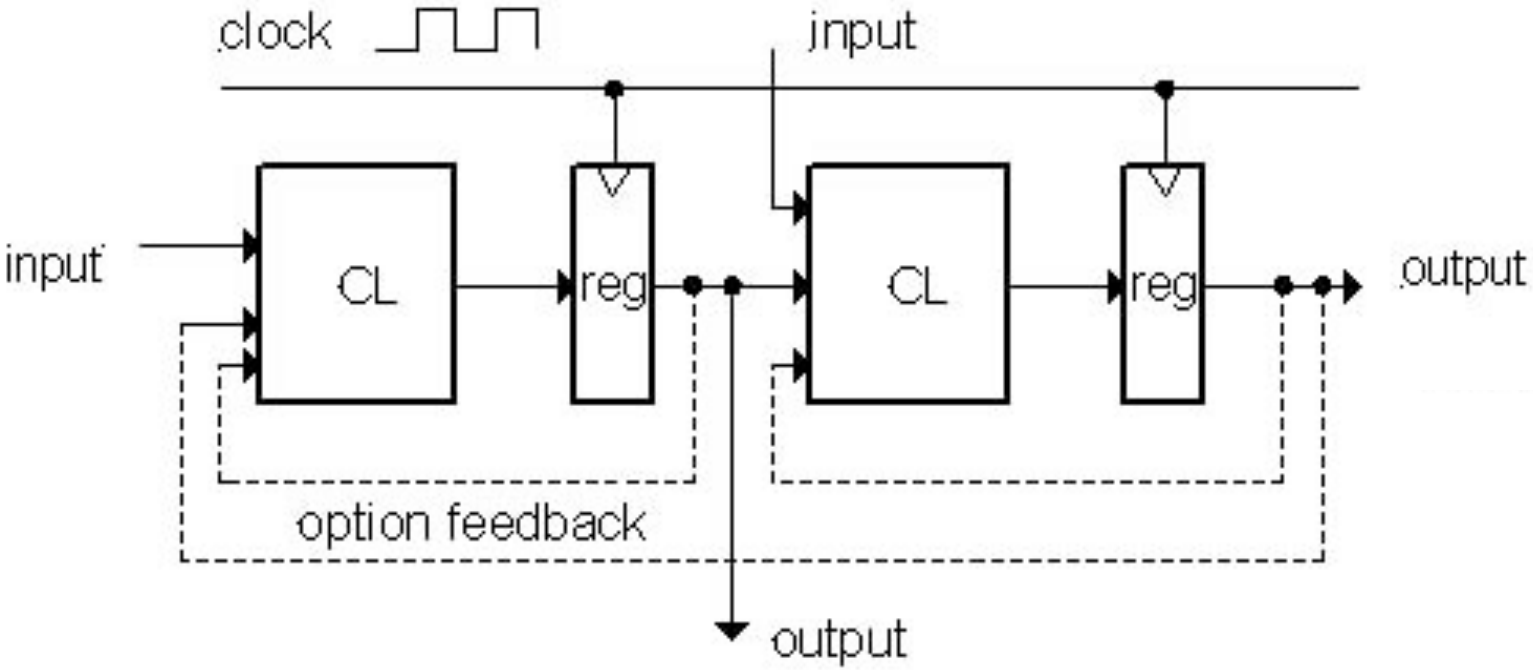

- Collection of CL blocks separated by registers.
- Registers may be back-to-back and CL blocks may be back-to-back.
- Feedback is optional.
- Clock signal(s) connects only to clock input of registers.

Beamer, Spring 2008 © UCB

Peer Instruction

A. HW feedback akin to SW recursion

B. The minimum period of a usable synchronous circuit is at least the CLK-to-Q delay

C. You can build a FSM to signal when an equal number of 0s and 1s has appeared in the input.

	ABC
1:	FFF
2:	FFT
3:	FTF
4:	FTT
5:	TFF
6:	TFT
7:	TTF
8:	TTT

"And In conclusion…"

- State elements are used to:
  - Build memories
  - Control the flow of information between other state elements and combinational logic
- D-flip-flops used to build registers
- Clocks tell us when D-flip-flops change
  - Setup and Hold times important
- We pipeline long-delay CL for faster clock
- Finite State Machines extremely useful
  - You'll see them again (150,152) & 164

Beamer, Spring 2008 © UCB