CS 61C: Great Ideas in Computer Architecture *Introduction to C, Part II*

Instructor:
David A. Patterson
http://inst.eecs.Berkeley.edu/~cs61c/sp12

Agenda

- Arrays
- Pointer arithmetic
- Administrivia
- Arrays vs. pointers
- Technology Break
- Pointer Problems
- Criticisms of C
- Summary

New-School Machine Structures (It's a bit more complicated!)

Software | *Hardware*

- Parallel Requests
  Assigned to computer
  e.g., Search "Katz"
- Parallel Threads
  Assigned to core
  e.g., Lookup, Ads
- Parallel Instructions
  >1 instruction @ one time
  e.g., 5 pipelined instructions
- Parallel Data
  >1 data item @ one time
  e.g., Add of 4 pairs of words
- Hardware descriptions
  All gates @ one time
- Programming Languages

Harness Parallelism & Achieve High Performance

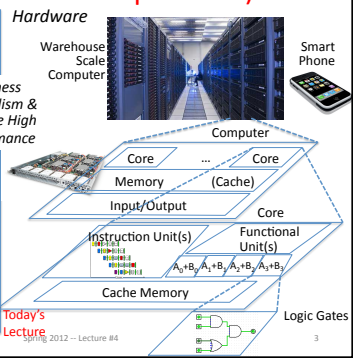

Today's Lecture

Big Idea #1: Levels of Representation/ Interpretation

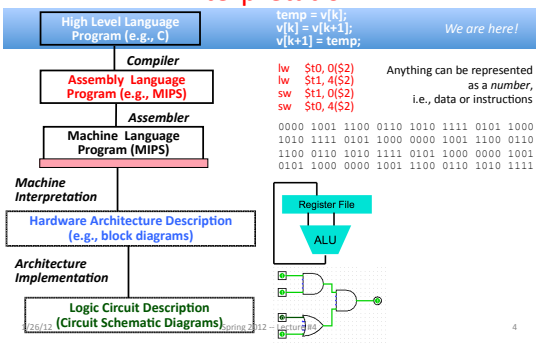

Review

- All data is in memory
  - Each memory location has an address to use to refer to it and a value stored in it
- Pointer is a C version (abstraction) of a data address
  - `*` "follows" a pointer to its value
  - `&` gets the address of a value
- C is an efficient language, but leaves safety to the programmer
  - Array bounds not checked
  - Variables not automatically initialized
  - Use pointers with care: they are a common source of bugs in programs

Arrays (1/5)

- Declaration:
  `int ar[2];`
  declares a 2-element integer array: just a block of memory

  `int ar[] = {795, 635};`
  declares and initializes a 2-element integer array

- Accessing elements:
  `ar[num]`
  returns the numth element

Arrays (2/5)

- Arrays are (almost) identical to pointers
  - `char *string` and `char string[]` are nearly identical declarations
  - Differ in subtle ways: incrementing, declaration of filled arrays
  - End of C string marking by 0 in last character
- *Key Concept*: Array variable is a "pointer" to the first (0th) element

C Strings

- String in C is just an array of characters

```
char string[] = "abc";
```

- How do you tell how long a string is?
  - Last character is followed by a 0 byte (aka "null terminator")

```
int strlen(char s[])
{
    int n = 0;
    while (s[n] != 0) n++;
    return n;
}
```


Arrays (3/5)

- Consequences:
  - `ar` is an array variable, but looks like a pointer
  - `ar[0]` is the same as `*ar`
  - `ar[2]` is the same as `*(ar+2)`
  - We can use pointer arithmetic to conveniently access arrays
- Declared arrays are only allocated while the scope is valid

```
char *foo() {
    char string[32]; ...;
    return string;
}
```

is incorrect ***and very very bad***

Arrays (4/5)

- Array size *n*; want to access from *0* to *n-1*, so you should use counter AND utilize a variable for declaration & incrementation
  - Bad pattern

```
int i, ar[10];
for(i = 0; i < 10; i++){ ... }
```

  - Better pattern

```
int ARRAY_SIZE = 10
int i, a[ARRAY_SIZE];
for(i = 0; i < ARRAY_SIZE; i++){ ... }
```

- SINGLE SOURCE OF TRUTH
  - You're utilizing indirection and avoiding maintaining two copies of the number 10
  - DRY: "Don't Repeat Yourself"

Arrays (5/5)

- Pitfall: An array in C does not know its own length, and its bounds are not checked!
  - Consequence: We can accidentally access off the end of an array
  - Consequence: We must pass the array *and its size* to any procedure that is going to manipulate it
- Segmentation faults and bus errors:
  - These are VERY difficult to find; be careful! (You'll learn how to debug these in lab)

Array Summary

- Array indexing is syntactic sugar for pointers
- `a[i]` is treated as `*(a+i)`
- E.g., three equivalent ways to zero an array:
  - `for (i=0; i < size; i++) a[i] = 0;`
  - `for (i=0; i < size; i++) *(a+i) = 0;`
  - `for (p=a; p < a+size; p++) *p = 0;`

What is TRUE about this function?

```
void foo(char *s, char *t)
{ while (*s)
      s++;
  while (*s++ = *t++)
      ;
}
```

- It has syntax errors
- No syntax errors; it changes characters in string `t` to next character in the string `s`
- No syntax errors; it copies a string at address `t` to the string at address `s`
- No syntax errors; it appends the string at address `t` to the end of the string at address `s`

Question: Which statement is FALSE regarding C and Java?

- Arrays in C are just pointers to the 0-th element
- As Java was derived from C, it has the same control flow constructs
- Like Java, in C you can check the length of an array (`a.length` gives no. elements in `a`)
- C has pointers but Java does not allow you to manipulate pointers or memory addresses of any kind

Pointer Arithmetic

pointer + number *pointer – number*

E.g., *pointer* + `1` adds 1 something to a pointer

```
char   *p;
char    a;
char    b;

p = &a;
p += 1;
```

```
int   *p;
int    a;
int    b;

p = &a;
p += 1;
```

In each, p now points to b (Assuming compiler doesn't reorder variables in memory)

Adds `1*sizeof(char)` to the memory address

Adds `1*sizeof(int)` to the memory address

Pointer arithmetic should be used cautiously

Arrays and Pointers

- Array ≈ pointer to the initial (0th) array element

  `a[i]` ≡ `*(a+i)`

- An array is passed to a function as a pointer
  - The array size is lost!
- Usually bad style to interchange arrays and pointers
  - Avoid pointer arithmetic!

Passing arrays:

Really `int *array` Must explicitly pass the size

```
int
foo(int array[],
    unsigned int size)
{
   … array[size - 1] …
}

int
main(void)
{
   int a[10], b[5];
   … foo(a, 10)… foo(b, 5) …
}
```


Arrays and Pointers

```
int
foo(int array[],
    unsigned int size)
{
   …
   printf("%d\n", sizeof(array));
}

int
main(void)
{
   int a[10], b[5];
   … foo(a, 10)… foo(b, 5) …
   printf("%d\n", sizeof(a));
}
```

What does this print? **8**

… because `array` is really a pointer (and a pointer is architecture dependent, but likely to be 8 on modern machines!)

What does this print? **40**

Arrays and Pointers

```
int  i;
int  array[10];

for (i = 0; i < 10; i++)
{
  array[i] = …;
}
```

```
int *p;
int  array[10];

for (p = array; p < &array[10]; p++)
{
  *p = …;
}
```

These code sequences have the same effect!

Administrivia

- CS61c is relentless!
  - This week: Lab #2, HW #2
  - Lab #2, Amazon EC2
  - HW #2 will soon be posted
- TA Scott Beamer guest lecture 1/31
- Due to conflicts with CS188, will start midtem at 6:40; ends at 9:40
- Wonderful to see the valuable discussion and help going on in Piazza!

Get to Know Your Professor

- Started it last semester, and was popular on the surveys
- More than lecture automatons?

David Patter

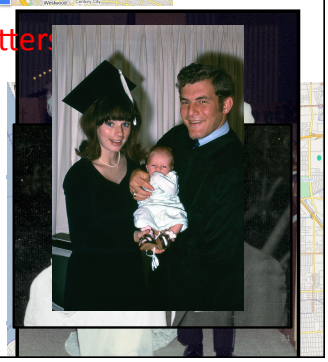

- Oldest of large family (4 kids)
- Married High School Sweetheart at 19
- UCLA BA Math @ 21
  - 1st college graduate
- Father at 21
  - 2nd child in grad school
- UCLA PhD @ 29
- Joined Cal in 1977

Agenda

- Arrays
- Administrivia
- Pointer arithmetic
- Arrays vs. pointers
- Technology Break
- Pointer Problems
- Criticisms of C
- Summary

Pointer Arithmetic (1/2)

- Since a pointer is just a memory address, we can add to it to step through an array
- `p+1` correctly computes a ptr to the next array element automatically depending on `sizeof (type)`
- `*p++` vs. `(*p)++` ?

```
x = *p++   ⇒  x = *p;  p =  p + 1;
x = (*p)++ ⇒  x = *p; *p = *p + 1;
```

This is a C syntax/semantics thing

- What if we have an array of large structs (objects)?
  - C takes care of it in the same way it handles arrays

Pointer Arithmetic (2/2)

- Every addition or subtraction to a pointer steps the number of bytes of thing it is declared to point to
  - This is why type-casting can get you into trouble
  - 1 byte for a char, 4 bytes for an int, etc.
- Following are equivalent:

```
int get(int array[], int n)
{
    return  (array[n]);
  // OR...
    return *(array + n);
}
```

If the first printf outputs 100 5 5 10, what will the next two printf output?

- 101 10 5 10
  101 11 5 11
- 104 10 5 10
  104 11 5 11
- 101 <other> 5 10
  101 <3-others>
- Error message

```
int main(void){
   int A[] = {5,10};
   int *p = A;
   printf("%u %d %d %d\n",
          p, *p, A[0], A[1]);
   p =  p + 1;
   printf("%u %d %d %d\n",
          p, *p, A[0], A[1]);
   *p = *p + 1;
   printf("%u %d %d %d\n",
          p, *p, A[0], A[1]);
}
```

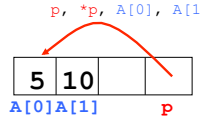

Pointers & Allocation (1/2)

- After declaring a pointer:
  - `int *ptr;`
- `ptr` doesn't actually point to anything yet (points somewhere, but don't know where). We can either:
  - Make it point to something that already exists, *or*
  - Allocate room in memory for something new that it will point to …

Pointers & Allocation (2/2)

- Pointing to something that already exists:
  - `int *ptr, var1, var2; var1 = 5;`
    `ptr  = &var1;  var2 = *ptr;`
- `var1` and `var2` have space implicitly allocated for them

Arrays (one element past array *must* be valid)

- Array size `n`; want to access from 0 to n-1, but test for exit by comparing to address one element past the array

```
int ar[10], *p, *q, sum = 0;
...
p = &ar[0]; q = &ar[10];
while (p != q)
   /* sum = sum + *p; p = p + 1; */
   sum += *p++;
```

Is this legal?

- C defines that one element past end of array must be a valid address, i.e., will not cause an bus error or address error

Pointer Arithmetic

- What is valid pointer arithmetic?
  - Add an integer to a pointer
  - Subtract 2 pointers (in the same array)
  - Compare pointers (<, <=, ==, !=, >, >=)
  - Compare pointer to NULL (indicates that the pointer points to nothing)
- Everything else is illegal since it makes no sense:
  - Adding two pointers
  - Multiplying pointers
  - Subtract pointer from integer

Pointer Arithmetic to Copy Memory

- We can use pointer arithmetic to "walk" through memory:

```
void copy(int *from, int *to, int n)
   {
    int i;
    for (i=0; i<n; i++) {
        *to++ = *from++;
   }
}
```

- Note we had to pass size (`n`) to `copy`

Arrays vs. Pointers

- Array name is a read-only pointer to the 0th element of the array
- Array parameter can be declared as an array or a pointer; an array argument can be passed as a pointer

```
int strlen(char s[])
{
    int n = 0;
    while (s[n] != 0)
        n++;
    return n;
}
```

```
int strlen(char *s)
{
    int n = 0;
    while (s[n] != 0)
        n++;
    return n;
}
```

Could be written:
`while (s[n])`

Which one of the pointer arithmetic operations is INVALID?

- ☐ Pointer + pointer
- ☐ Pointer – integer
- ☐ Integer + pointer
- ☐ **Pointer – pointer**

Which one of the pointer comparisons is INVALID?

- ☐ Compare pointer to pointer
- ☐ Compare pointer to integer
- ☐ Compare pointer to 0
- ☐ **Compare pointer to NULL**

Pointers and Functions (1/2)

- What if the thing you want changed is a *pointer*?
- What gets printed?

```
void IncrementPtr(int  *p)
{    p =  p + 1;    }

int A[3] = {50, 60, 70};
int *q = A;
IncrementPtr(q);
printf("*q = %d\n", *q);
```

*q = 50

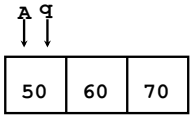

Pointers and Functions (2/2)

- Solution! Pass a *pointer to a pointer*, declared as `**h`
- Now what gets printed?

```
void IncrementPtr(int **h)
{    *h = *h + 1;    }

int A[3] = {50, 60, 70};
int *q = A;
IncrementPtr(&q);
printf("*q = %d\n", *q);
```

*q = 60

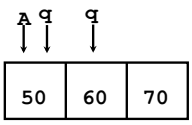

C String Standard Functions #include <string.h>

- `int strlen(char *string);`
  - Compute the length of string
- `int strcmp(char *str1, char *str2);`
  - Return 0 if `str1` and `str2` are identical (how is this different from `str1 == str2`?)
- `char *strcpy(char *dst, char *src);`
  - Copy contents of string `src` to the memory at `dst`. Caller must ensure that `dst` has enough memory to hold the data to be copied
  - Note: `dst = src` only copies pointers, not string itself

Segmentation Fault vs. Bus Error

- `http://www.hyperdictionary.com/`
- Bus Error
  - A fatal failure in the execution of a machine language instruction resulting from the processor detecting an anomalous condition on its bus. Such conditions include invalid address alignment (accessing a multi-byte number at an odd address), accessing a physical address that does not correspond to any device, or some other device-specific hardware error. A bus error triggers a processor-level exception which Unix translates into a "SIGBUS" signal which, if not caught, will terminate the current process.
- Segmentation Fault
  - An error in which a running Unix program attempts to access memory not allocated to it and terminates with a segmentation violation error and usually a core dump.

C String Problems

- Common mistake is to forget to allocate an extra byte for the null terminator
- More generally, C requires the programmer to manage memory manually (unlike Java or C++)
  - When creating a long string by concatenating several smaller strings, the programmer must insure there is enough space to store the full string!
  - What if you don't know ahead of time how big your string will be?
  - Buffer overrun security holes!

Criticisms of C - Syntax

- K&R: *C, like any other language, has its blemishes. Some of the operators have the wrong precedence; some parts of the syntax could be better.*
- Precedence: == binds more tightly than `&`, |
  - `x & 1 == 0` means `x & (1 == 0)`
    vs. `(x & 1) == 0`
- 15 levels of precedence for 45 operators
  - K&R p. 53
  - Therefore use ()

Criticisms of C - Syntax

- Difference between assignment and equality
  - `a = b` is assignment
  - `a == b` is an equality test
- One of the most common errors for beginning C programmers!
  - One pattern (when comparing with constant) is to put the var on the right!
    If you happen to use =, it won't compile!
    - `if (3 == a) { ...`

Criticisms of C - Syntax

- Syntax: confusion about = and ==
  - `if (a=b)` is true if a ≠ 0 after assignment
- Syntax: `*p++` means get value at address pointed to by `p`, then increment `p` to point to next data item
- `*--p` means decrement `p` to point to the previous data item and that value

Criticisms of C - Syntax

- Case statement (`switch`) requires proper placement of `break` to work properly
  - Will do all cases until sees a break

```
switch(ch){
  case '+': …  /* does + and - */
  case '-': … break;
  case '*': … break;
  default: …
}
```

Criticisms of C – Type casting

- Type casting - pretend that a variable declared in one type is actually of another type

```
int x, y, *p; …
y = *p; /* legal */
y = *x; /* illegal */
y = *((int *)x); /* legal! */
```


Criticisms of C - Functionality

- No runtime checking of array bounds

C in Retrospect

- *C is not a "very high level" language, nor a "big" one, and is not specialized to any particular area of application. But its absence of restrictions and its generality make it more convenient and effective for many tasks than supposedly more powerful languages.*

  – Kernighan and Ritchie
- C is close to hardware so ideal for 61C vs. Java or Python, since trying to understand hardware and performance

And in Conclusion, …

- Pointers are aliases to variables
- Pointers can be used to index into arrays
- Strings are (null terminated) arrays of characters
- Pointers are the source of many bugs in C, so handle with care
- C, like all languages, has flaws but its small and useful language for some tasks