inst.eecs.berkeley.edu/~cs61c

CS61C : Machine Structures

Lecture 26
IO Basics, Storage & Performance I

2010-08-04

Instructor Paul Pearce

HACKING THE SMART GRID →

With the rapid deployment of "Smart Grid" technology, such as the smart meters PG&E is currently deploying throughout all of Berkeley, questions are being raised as to the safety and security and such devices.

http://www.technologyreview.com/computing/25920/

Goals for today:

- Today we're going to be giving you a VERY high level overview of system input/output. The goal is not to make you experts in any one area, but simply to give you brief exposure in a number of areas.
- We'll also start talking about system performance, which we'll finish up tomorrow.
- We're going to start with:

I/O Basics

Recall : 5 components of any Computer

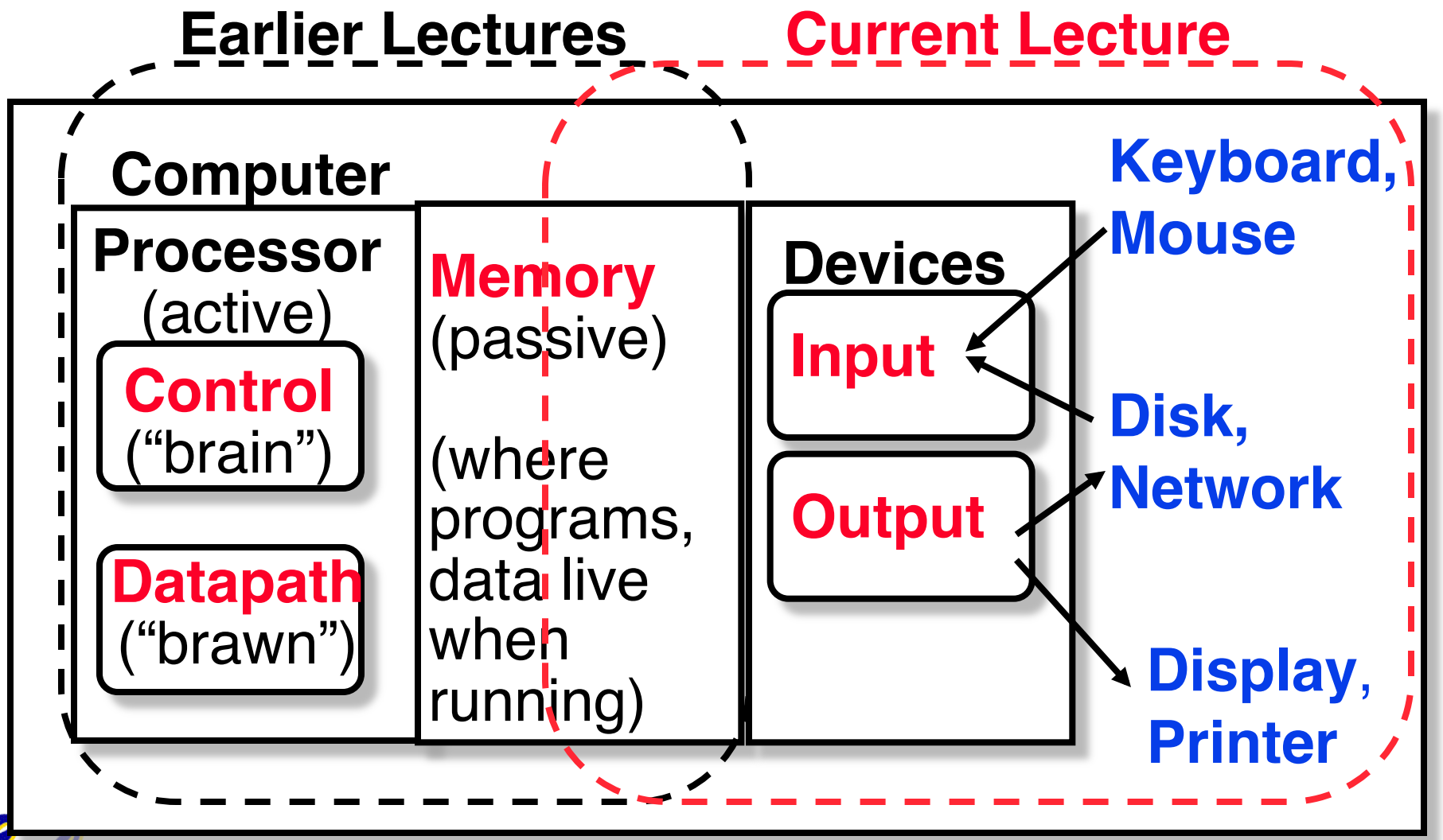

What do we need to make I/O work?

- A way to connect many types of devices to the Proc-Mem
- A way to control these devices, respond to them, and transfer data
- A way to present them to user programs so they are useful

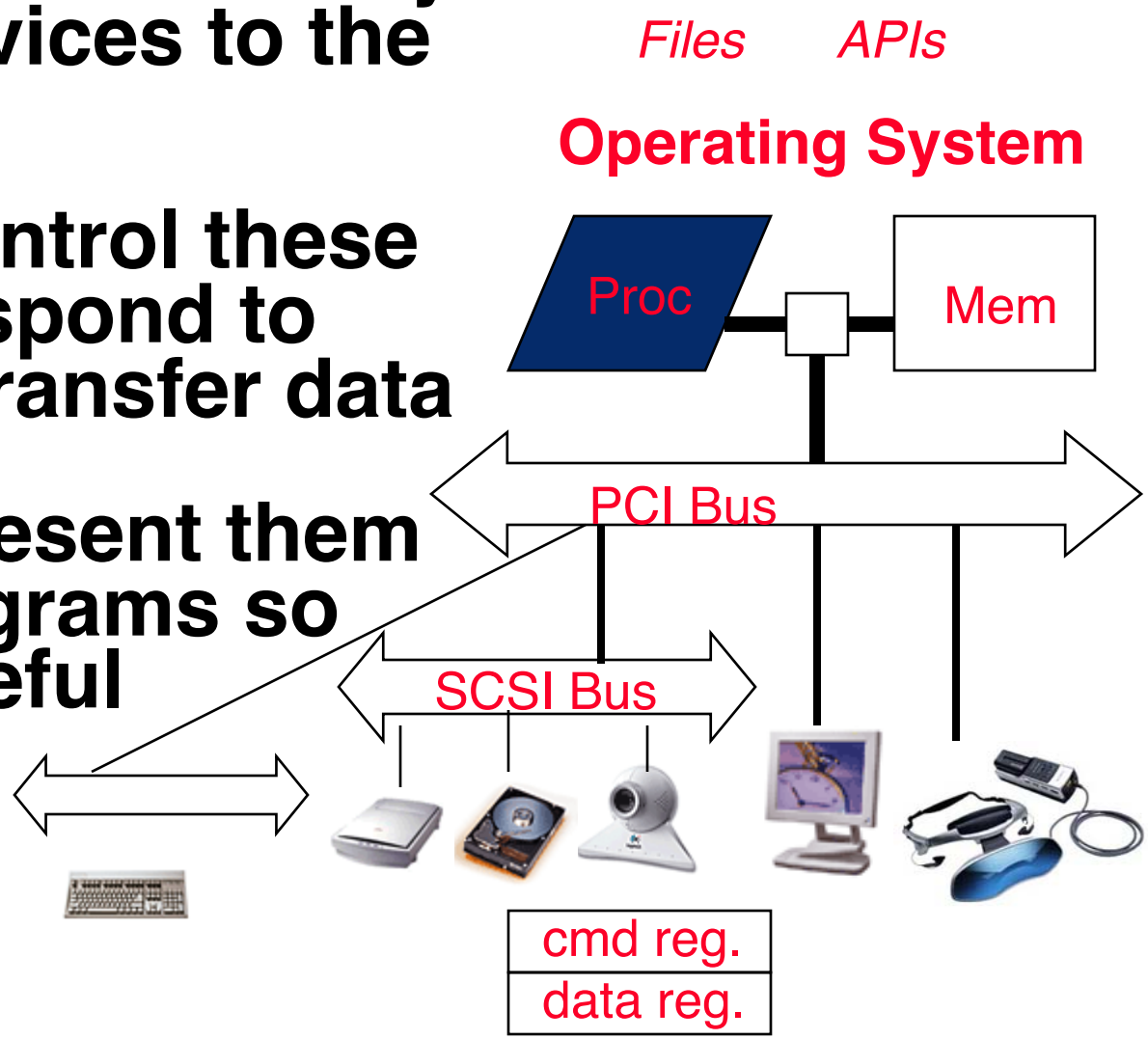

Memory Mapped I/O

- Certain addresses are not regular memory
- Instead, they correspond to registers in I/O devices

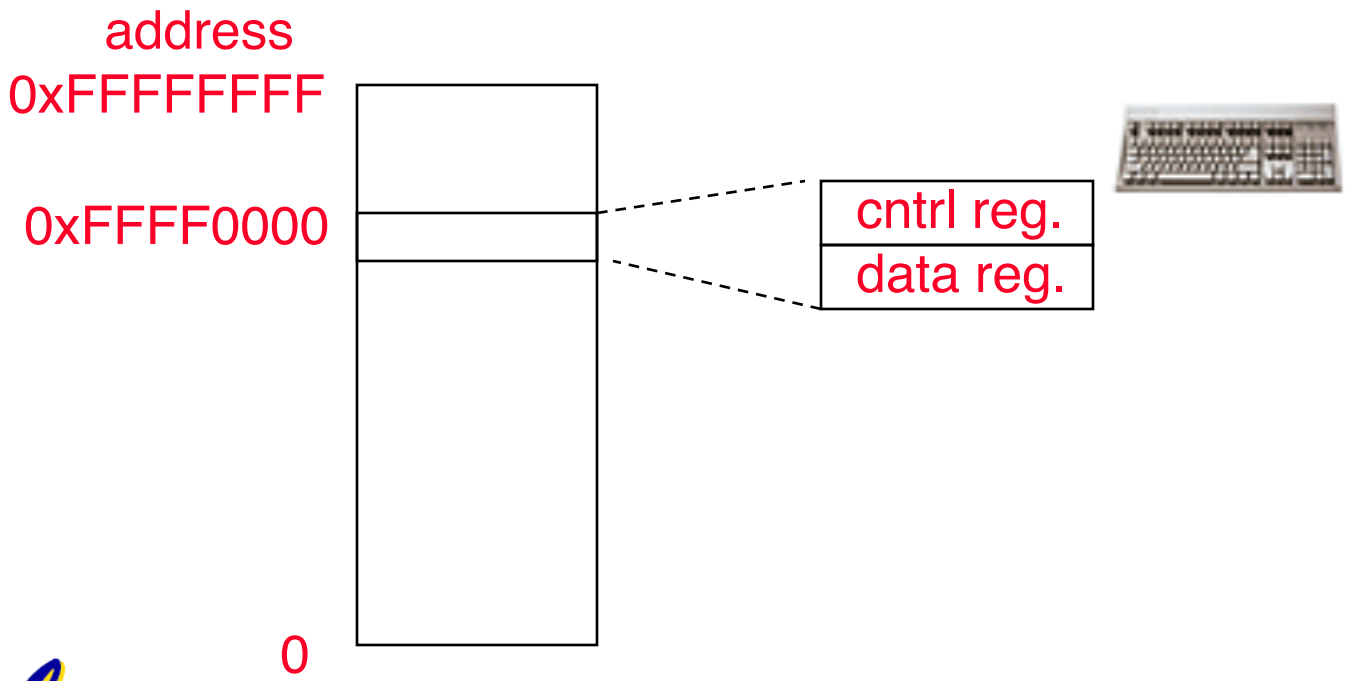

Processor Checks Status before Acting

- Path to device generally has 2 registers:
  - Control Register, says it's OK to read/write (I/O ready) [think of a flagman on a road]
  - Data Register, contains data
- Processor reads from Control Register in loop, waiting for device to set Ready bit in Control reg (0 ⇒ 1) to say its OK
- Processor then loads from (input) or writes to (output) data register
  - Load from or Store into Data Register resets Ready bit (1 ⇒ 0) of Control Register
- This is called "Polling"

What is the alternative to polling?

- Wasteful to have processor spend most of its time "spin-waiting" for I/O to be ready if events are infrequent
  - 1GHz microprocessor can execute 1 billion load or store instructions per second, or 4,000,000 KB/s data rate
  - I/O devices data rates range from 0.01 KB/s to 125,000 KB/s
  - Note: When discussing transfer rates, use 10^x
- Would like an unplanned procedure call that would be invoked only when I/O device is ready
- Solution: use exception mechanism to help I/O. Interrupt program when I/O ready, return when done with data transfer

I/O Interrupt

- An I/O interrupt is like overflow exceptions except:
  - An I/O interrupt is "asynchronous"
  - More information needs to be conveyed
- An I/O interrupt is asynchronous with respect to instruction execution:
  - I/O interrupt is not associated with any instruction, but it can happen in the middle of any given instruction
  - I/O interrupt does not prevent any instruction from completion

Interrupt-Driven Data Transfer

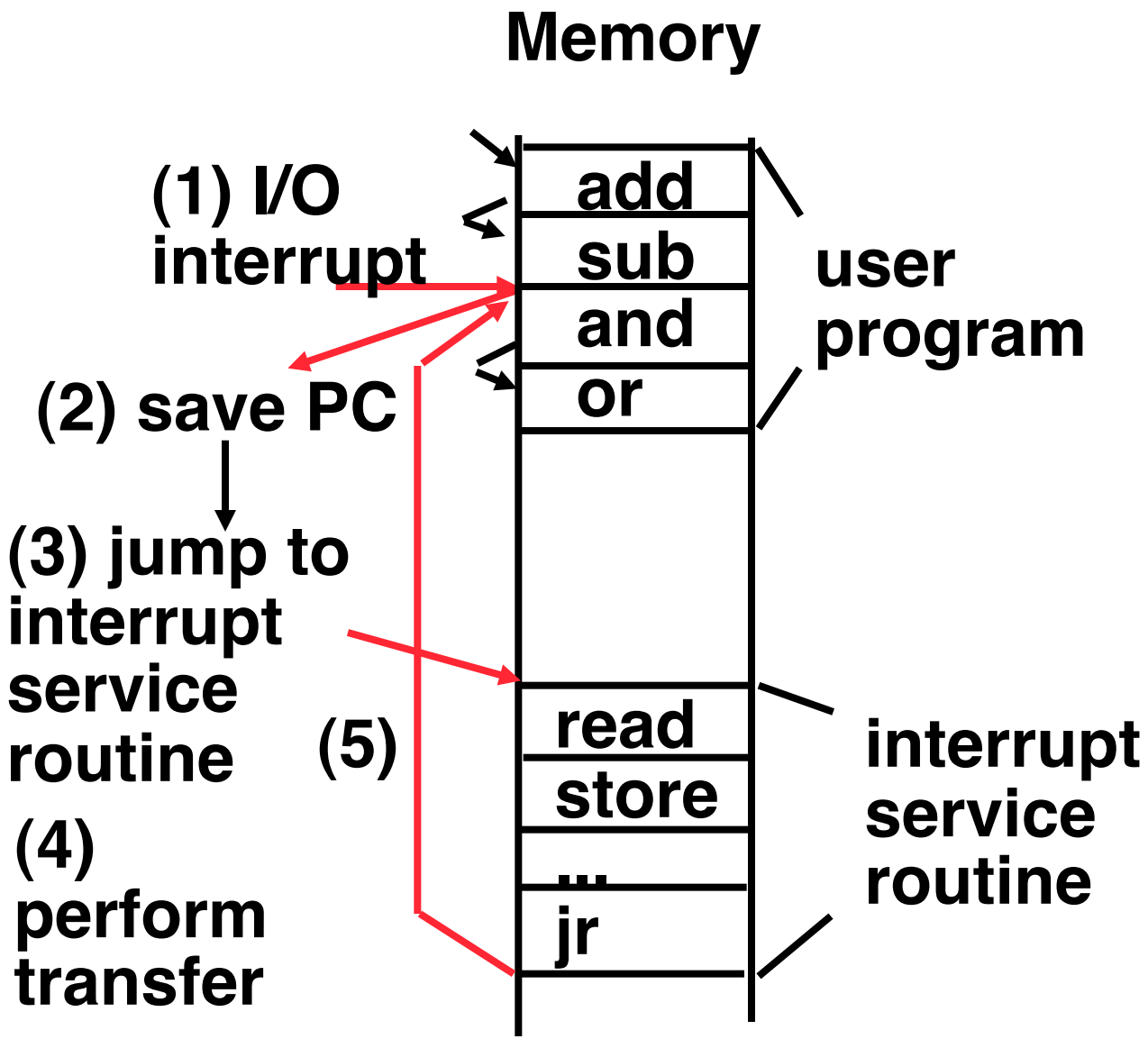

disks

Magnetic Disk – common I/O device

- A kind of computer memory
  - Information stored by magnetizing ferrite material on surface of rotating disk
- Nonvolatile storage
  - retains its value without applying power to disk.
- Two Types
  - Floppy disks – slower, less dense, removable, non-existent today
  - Hard Disk Drives (HDD) – faster, more dense, non-removable.
- Purpose in computer systems (Hard Drive):
  - Long-term, inexpensive storage for files
  - "Backup" for main-memory. Large, inexpensive, slow level in the memory hierarchy (virtual memory)

Photo of Disk Head, Arm, Actuator

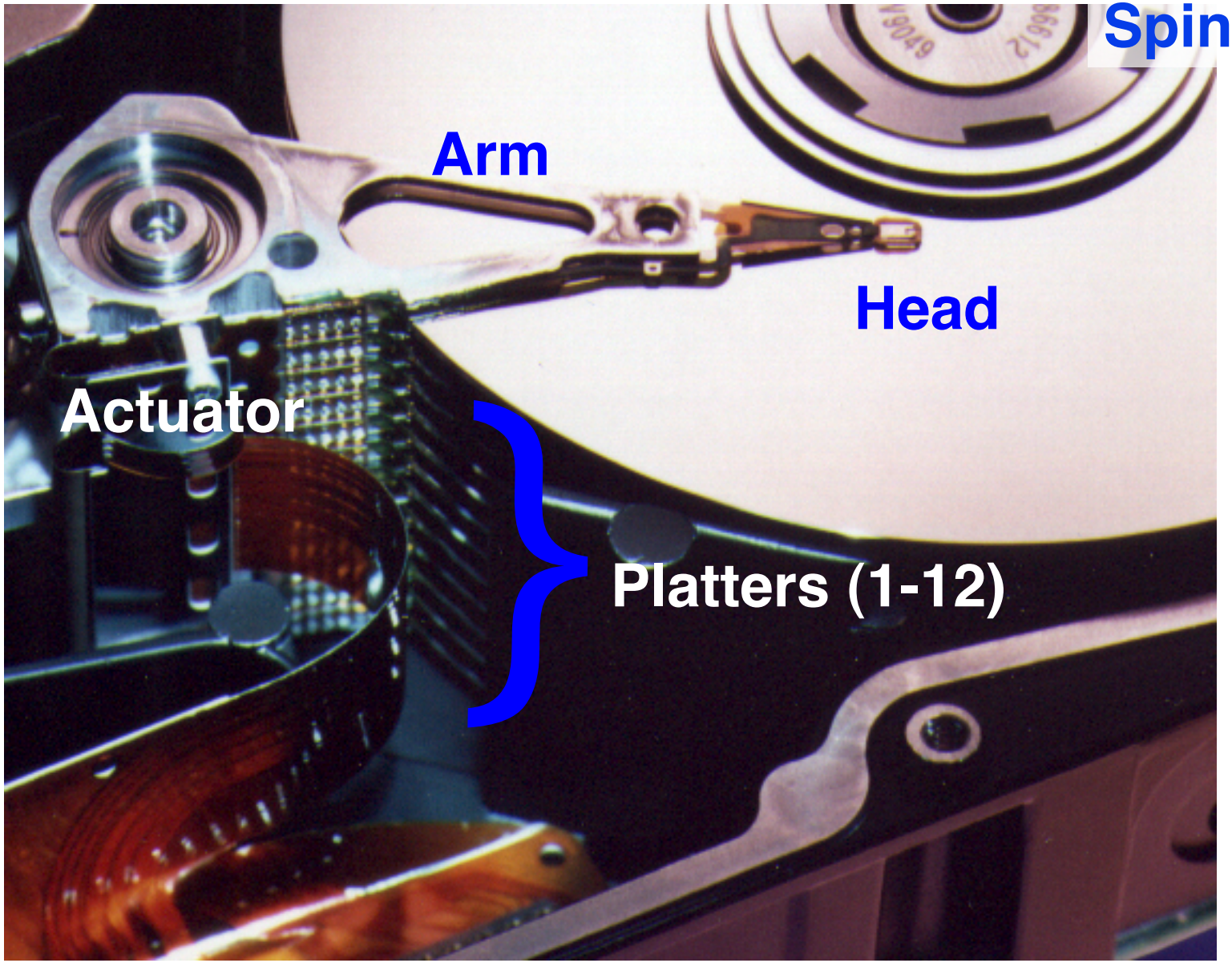

Administrivia

- Project 2 graded under way, if you haven't signed up for a slot…. You should get on that.
- Project 3 out now
  - No partners for this project!
- Grading underway for rest of the assignments. Will get them done ASAP
- Don't forget to register your iClicker
  - http://www.iclicker.com/registration/
- Final Thursday August 12th from 8am to 11am in 10 Evans.

Disk Device Terminology

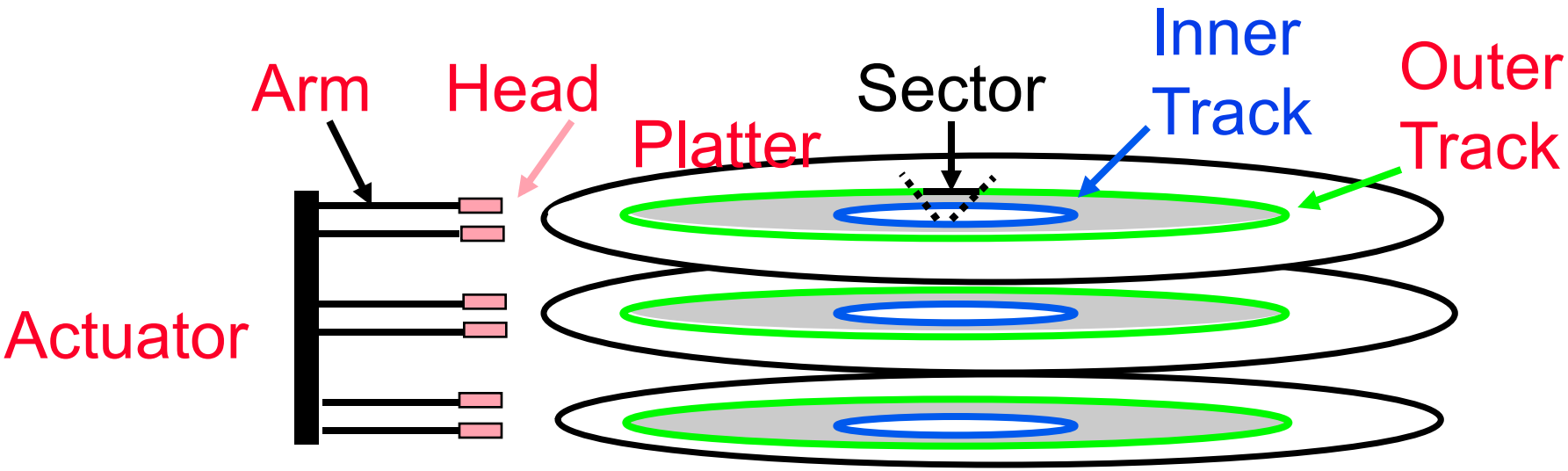

- Several platters, with information recorded magnetically on both surfaces (usually)
- Bits recorded in tracks, which in turn divided into sectors (e.g., 512 Bytes)
- Actuator moves head (end of arm) over track ("seek"), wait for sector rotate under head, then read or write

Disk Device Performance (1/2)

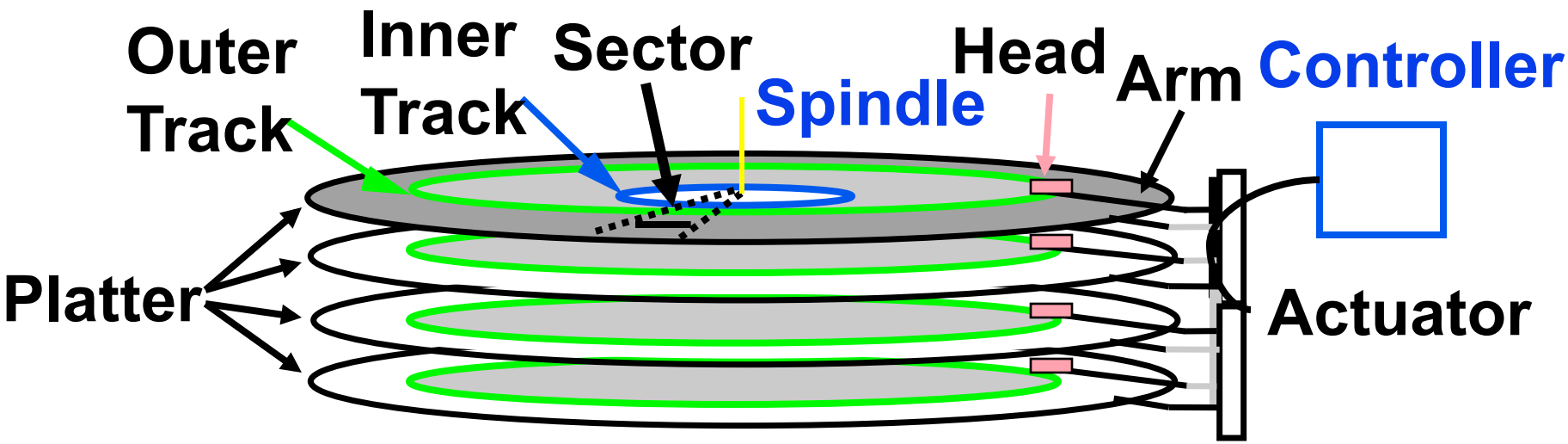

- Disk Latency = Seek Time + Rotation Time + Transfer Time + Controller Overhead
  - Seek Time? depends on no. tracks to move arm, speed of actuator
  - Rotation Time? depends on speed disk rotates, how far sector is from head
  - Transfer Time? depends on data rate (bandwidth) of disk (f(bit density,rpm)), size of request

Disk Device Performance (2/2)

- Average distance of sector from head?
- 1/2 time of a rotation
  - 7200 Revolutions Per Minute ⇒ 120 Rev/sec
  - 1 revolution = 1/120 sec ⇒ 8.33 milliseconds
  - 1/2 rotation (revolution) ⇒ 4.17 ms
- Average no. tracks to move arm?
  - Disk industry standard benchmark:
    - Sum all time for all possible seek distances from all possible tracks / # possible
    - Assumes average seek distance is random
- Size of Disk cache can strongly affect perf!
  - Cache built into disk system, OS knows nothing

Where does Flash memory come in?

- Microdrives and Flash memory (e.g., CompactFlash) are going head-to-head
  - Both non-volatile (no power, data ok)
  - Flash benefits: durable & lower power (no moving parts, need to spin *µ*drives up/down)
  - Flash limitations: finite number of write cycles (wear on the insulating oxide layer around the charge storage mechanism). Most ≥ 100K, some ≥ 1M W/erase cycles.
- How does Flash memory work?
  - NMOS transistor with an additional conductor between gate and source/drain which "traps" electrons. The presence/absence is a 1 or 0.

en.wikipedia.org/wiki/Flash_memory

What does Apple put in its iPods?

Toshiba flash
1, 2GB

Samsung flash
4, 8GB

Toshiba 1.8-inch HDD
80, 160GB

Toshiba flash
8, 16, 32GB

shuffle, nano, classic, touch

RAID : Redundant Array of Inexpensive Disks

- Invented @ Berkeley (1989) by Patterson, Katz, et al.
- A multi-billion industry
  80% non-PC disks sold in RAIDs
- Idea:
  - Files are "striped" across multiple disks in a redundant manor
  - Redundancy yields high data availability
    - Disks will still fail
  - Contents reconstructed from data redundantly stored in the array
    - ⇒ Capacity penalty to store redundant info
    - ⇒ Bandwidth penalty to update redundant info

Performance

Why Performance? Faster is better!

- **Purchasing Perspective**: given a collection of machines (or upgrade options), which has the
  - best performance ?
  - least cost ?
  - best performance / cost ?
- **Computer Designer Perspective**: faced with design options, which has the
  - best performance improvement ?
  - least cost ?
  - best performance / cost ?
- All require basis for comparison and metric for evaluation!
  - Solid metrics lead to solid progress!

Two Notions of "Performance"

Plane	DC to Paris	Top Speed	Passen-gers	Throughput (pmph)
Boeing 747	6.5 hours	610 mph	470	286,700
BAD/Sud Concorde	3 hours	1350 mph	132	178,200

- Which has higher performance?
  - Interested in time fly one plane?
  - Interested in delivering as many passengers per day as possible?
- In a computer, time for one task called Latency or Response Time or Execution Time
- In a computer, tasks per unit time called Throughput or Bandwidth

Definitions

- Performance is in units of things per sec
  - bigger is better
- If mostly concerned with response time
  - $\text{performance}(x) = \dfrac{1}{\text{execution\_time}(x)}$
- " F(ast) is *n* times faster than S(low) " means:

$$n = \frac{\text{performance}(F)}{\text{performance}(S)} = \frac{\text{execution\_time}(S)}{\text{execution\_time}(F)}$$

Example of Response Time v. Throughput

- Time of Concorde vs. Boeing 747?
  - Concord is [6.5 hours / 3 hours = 2.2] times faster than the Boeing
  - Concord is 2.2 times ("120%") faster in terms of flying time (response time)
- Throughput of Boeing vs. Concorde?
  - Boeing 747: 286,700 pmph / 178,200 pmph = 1.6 times faster
  - Boeing is 1.6 times ("60%") faster in terms of throughput
- We will focus primarily on response time.

What is Time?

- Straightforward definition of time:
  - Total time to complete a task, including disk accesses, memory accesses, I/O activities, operating system overhead, ...
  - "real time", "response time" or "elapsed time"
- Alternative: just time processor (CPU) is working only on your program (since multiple processes running at same time)
  - "CPU execution time" or "CPU time"
  - Often divided into system CPU time (in OS) and user CPU time (in user program)

How to Measure Time?

- Real Time ⇒ Actual time elapsed
- CPU Time: Computers constructed using a clock that runs at a constant rate and determines when events take place in the hardware
  - These discrete time intervals called clock cycles (or informally clocks or cycles)
  - Length of clock period: clock cycle time (e.g., ½ nanoseconds or ½ ns) and clock rate (e.g., 2 gigahertz, or 2 GHz), which is the inverse of the clock period; use these!

Measuring Time using Clock Cycles (1/2)

- CPU execution time for a program
  - Units of [seconds / program] or [s/p]

= Clock Cycles for a program x Clock Period

  - Units of [s/p] = [cycles / p] x [s / cycle] = [c/p] x [s/c]

- Or

$$= \frac{\text{Clock Cycles for a program [c / p]}}{\text{Clock Rate [c / s]}}$$

Measuring Time using Clock Cycles (2/2)

- One way to define clock cycles:

Clock Cycles for program [c/p]

= Instructions for a program [i/p]
(called "Instruction Count")

x Average Clock cycles Per Instruction [c/i]
(abbreviated "CPI")

- CPI one way to compare two machines with same instruction set, since Instruction Count would be the same

Peer Instruction

1) Processors must communicate with I/O devices via special instructions.

2) For devices with low I/O event frequency polling is a better choice than interrupts.

	12
a)	FF
b)	FT
c)	TF
d)	TT

"And in conclusion…"

- I/O gives computers their 5 senses
- Vast I/O speed range
- Processor speed means must synchronize with I/O devices before use
- Polling works, but expensive
  - processor repeatedly queries devices
- Interrupts works, more complex
  - devices causes an exception, causing OS to run and deal with the device
- Latency v. Throughput
- Real Time: time user waits for program to execute: depends heavily on how OS switches between tasks
- CPU Time: time spent executing a single program: depends solely on design of processor (datapath, pipelining effectiveness, caches, etc.)

Bonus slides

- These are extra slides that used to be included in lecture notes, but have been moved to this, the "bonus" area to serve as a supplement.
- The slides will appear in the order they would have in the normal presentation

Bonus

The Internet (1962)

www.computerhistory.org/internet_history

- **Founders**
  - JCR Licklider, as head of ARPA, writes on "intergalactic network"
  - 1963 : ASCII becomes first universal computer standard
  - 1969 : Defense Advanced Research Projects Agency (DARPA) deploys 4 "nodes" @ UCLA, SRI, Utah, & UCSB
  - 1973 Robert Kahn & Vint Cerf invent TCP, now part of the Internet Protocol Suite

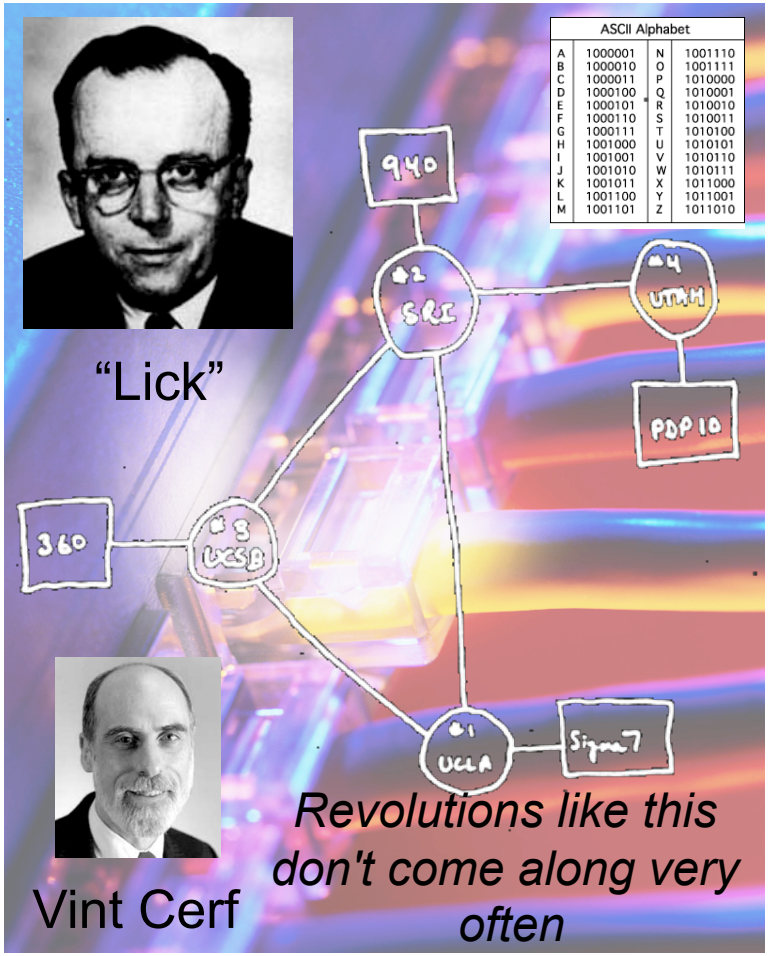

- **Internet growth rates**
  - Exponential since start!

www.greatachievements.org/?id=3736

en.wikipedia.org/wiki/Internet_Protocol_Suite

Why Networks?

- Originally sharing I/O devices between computers
  - E.g., printers
- Then communicating between computers
  - E.g., file transfer protocol
- Then communicating between people
  - E.g., e-mail
- Then communicating between networks of computers
  - E.g., file sharing, www, …

The World Wide Web (1989)

en.wikipedia.org/wiki/History_of_the_World_Wide_Web

- "System of interlinked hypertext documents on the Internet"
- History
  - 1945: Vannevar Bush describes hypertext system called "memex" in article
  - 1989: Tim Berners-Lee proposes, gets system up '90
  - ~2000 Dot-com entrepreneurs rushed in, 2001 bubble burst
- Wayback Machine
  - Snapshots of web over time
- Today : Access anywhere!

Tim Berners-Lee

World's First web server in 1990

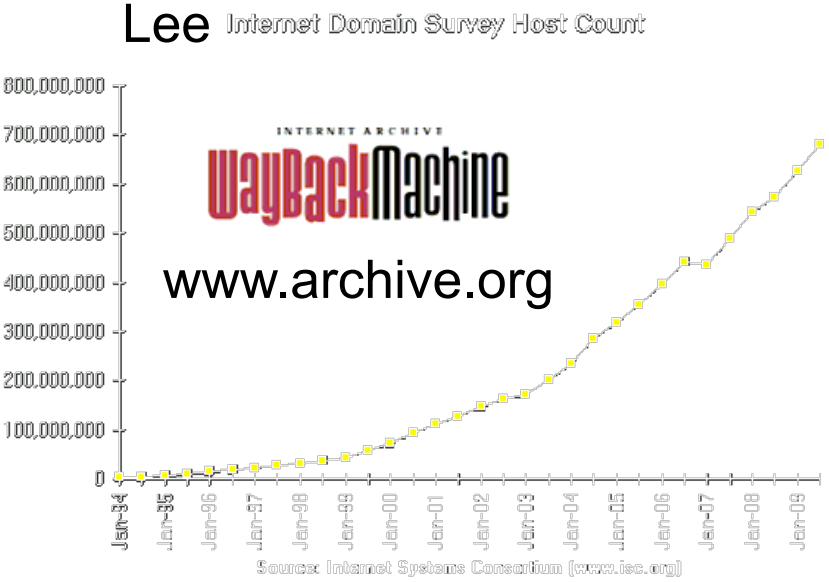

Shared vs. Switched Based Networks

- **Shared vs. Switched:**
  - **Switched:** pairs (“ ” connections) communicate at same time
  - **Shared:** 1 at a time (CSMA/CD)
- **Aggregate bandwidth (BW) in switched network is many times shared:**
  - point-to-point faster since **no arbitration**, simpler interface

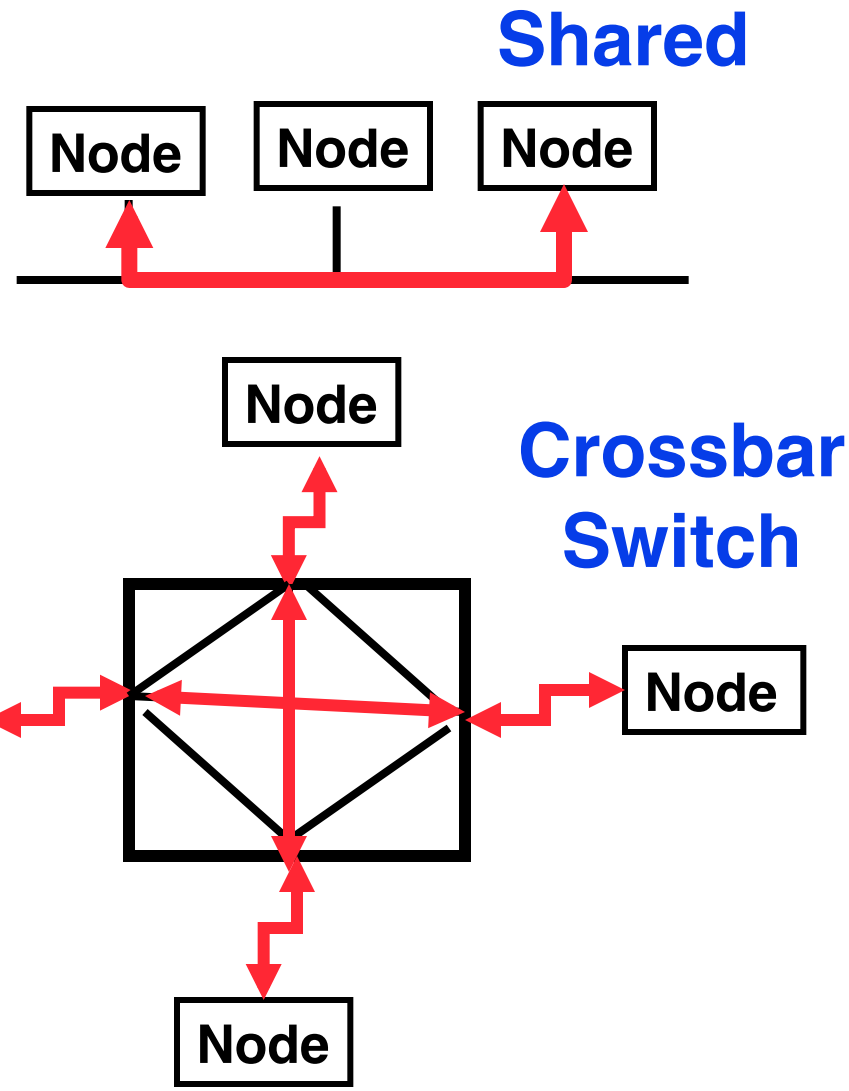

What makes networks work?

- **links** connecting **switches** to each other and to computers or devices

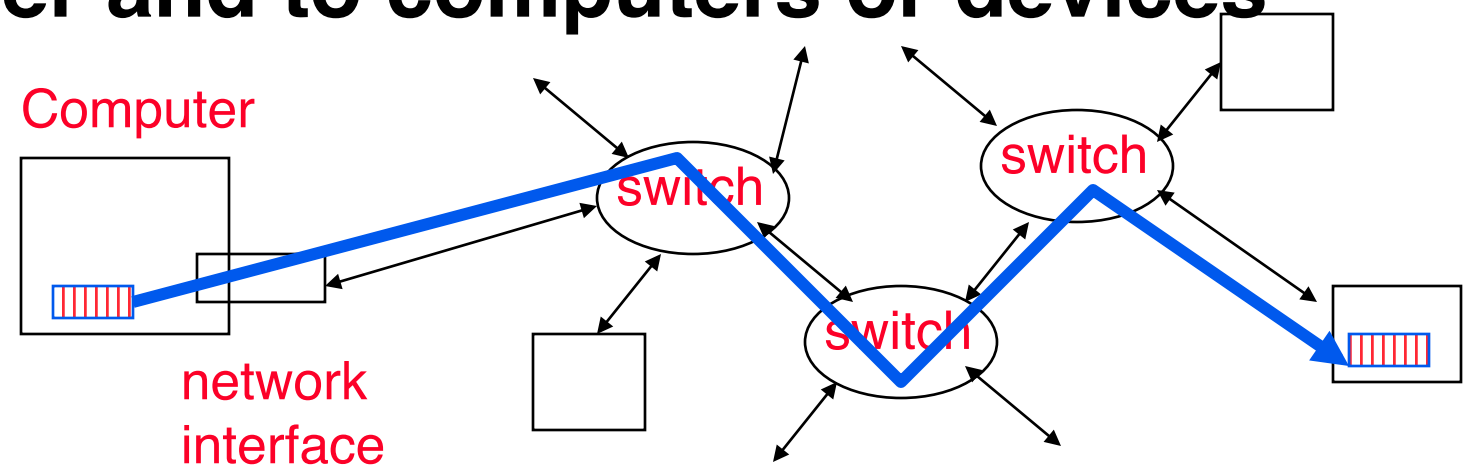

  - ability to **name** the components and to **route** packets of information - messages - from a source to a destination

- Layering, redundancy, protocols, and encapsulation as means of **abstraction (61C big idea)**

"RAID 0": No redundancy = "AID"

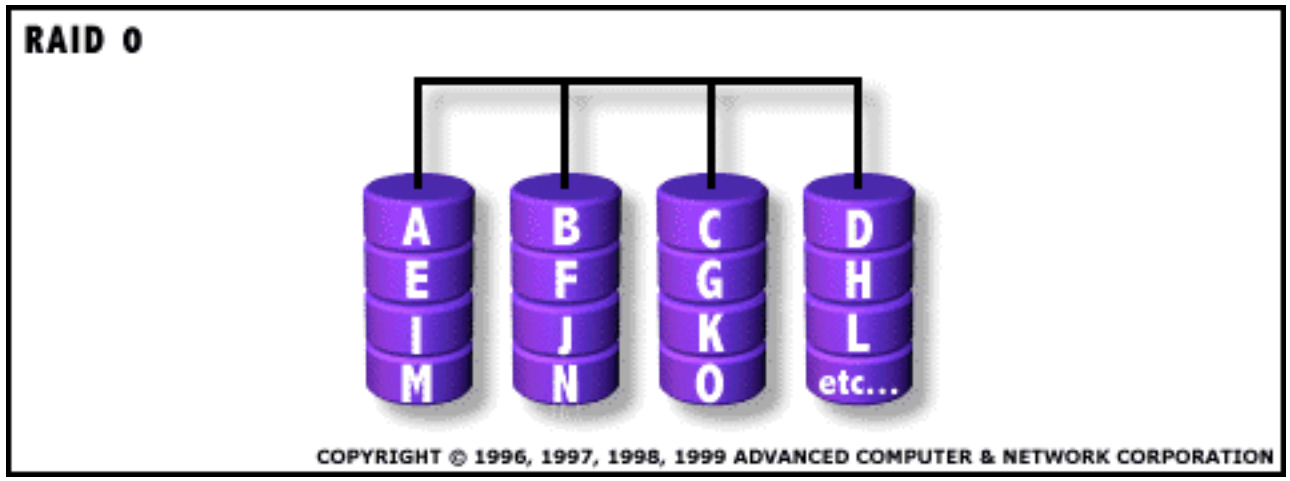

- **Assume have 4 disks of data for this example, organized in blocks**
- **Large accesses faster since transfer from several disks at once**

This and next 5 slides from `RAID.edu`, `http://www.acnc.com/04_01_00.html`
`http://www.raid.com/04_00.html` also has a great tutorial

RAID 1: Mirror data

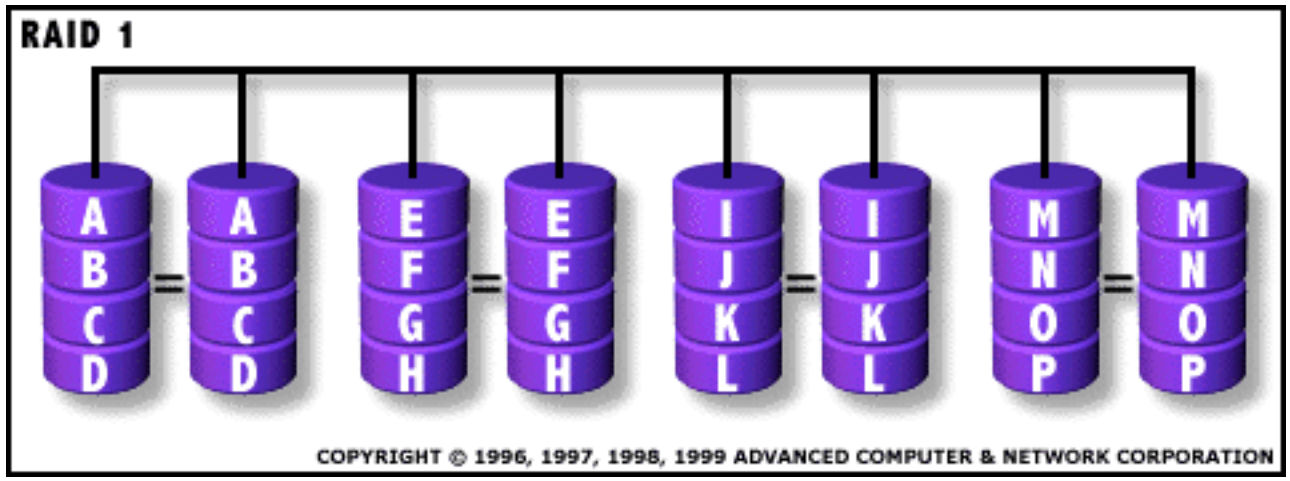

- Each disk is fully duplicated onto its "mirror"
  - Very high availability can be achieved
- Bandwidth reduced on write:
  - 1 Logical write = 2 physical writes
- Most expensive solution: 100% capacity overhead

RAID 3: Parity

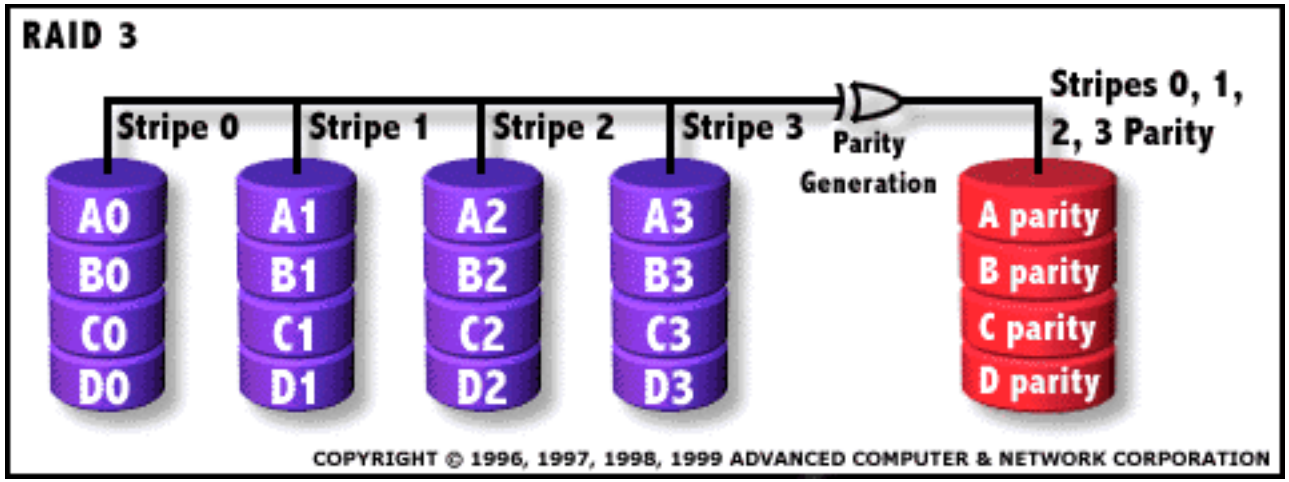

- Parity computed across group to protect against hard disk failures, stored in P disk
- Logically, a single high capacity, high transfer rate disk
- 25% capacity cost for parity in this example vs. 100% for RAID 1 (5 disks vs. 8 disks)

Inspiration for RAID 5 (RAID 4 block-striping)

- Small writes (write to one disk):
  - Option 1: read other data disks, create new sum and write to Parity Disk (access all disks)
  - Option 2: since P has old sum, compare old data to new data, add the difference to P:
    1 logical write = 2 physical reads + 2 physical writes to 2 disks
- Parity Disk is bottleneck for Small writes:
  Write to A0, B1 ➔ both write to P disk

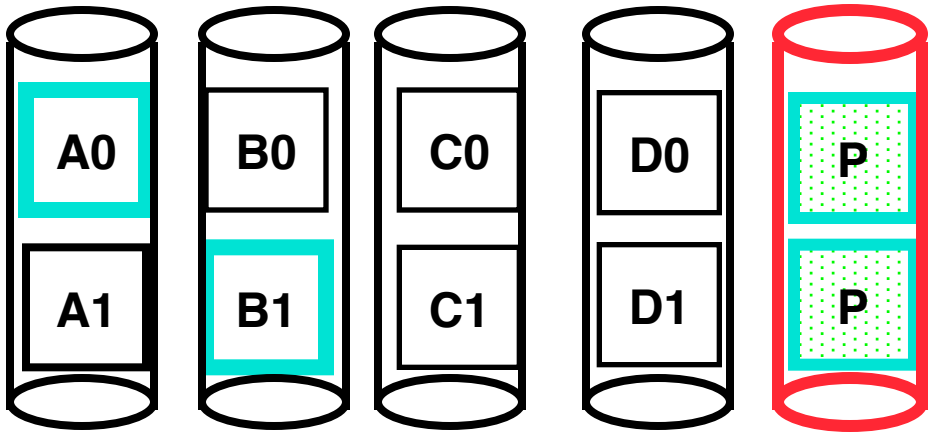

RAID 5: Rotated Parity, faster small writes

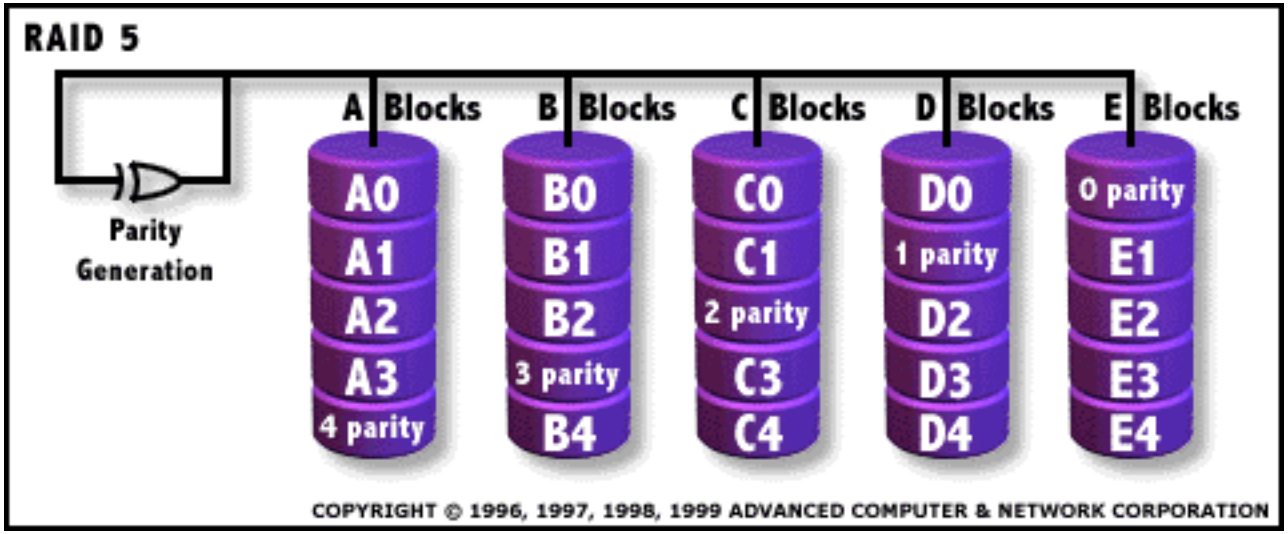

- Independent writes possible because of interleaved parity
  - Example: write to A0, B1 uses disks 0, 1, 4, 5, so can proceed in parallel
  - Still 1 small write = 4 physical disk accesses

en.wikipedia.org/wiki/Redundant_array_of_independent_disks

Words, Words, Words…

- Will (try to) stick to "n times faster"; its less confusing than "m % faster"

- As faster means both decreased execution time and increased performance, to reduce confusion we will (and you should) use "improve execution time" or

  "improve performance"