CS 61C: Great Ideas in Computer Architecture (Machine Structures)

Introduction to C (Part II)

Instructors:
Randy H. Katz
David A. Patterson

http://inst.eecs.Berkeley.edu/~cs61c/sp11

Levels of Representation/Interpretation

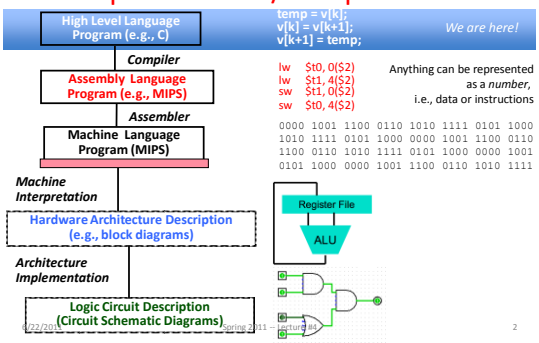

Agenda

- C and Pointer review
- Arrays
- Administrivia
- Pointer Arithmetic
- Break
- Pointer Misc
- Pointer Problems
- Summary

Peer Instruction Question 1

```
int *p;
*p = 5;
printf("%d\n",*p);
```

What is the result from executing this code?

a) Prints 5
b) Prints garbage
c) Always crashes.
d) Almost always crashes.

Peer Instruction Answer 1

```
int *p;
*p = 5;
printf("%d\n",*p);
```

What is the result from executing this code?

a) Prints 5
b) Prints garbage
c) Always crashes.
d) Almost always crashes.

- Uninitialized variables contain garbage, p may point to an invalid memory address.
- Trying to write to an invalid address will crash program (segmentation fault).
- There's a (very) small chance p may just happen to contain a valid address.

Peer Instruction Question 2

```
void main(); {
  int *p, x=5, y; // init
  y = *(p = &x) + 1;
  int z;
  flip-sign(p);
  printf("x=%d,y=%d,p=%d\n",x,y,p);
}
flip-sign(int *n){*n = -(*n)}
```

How many syntax + logic errors in this C code?

```
#Errors
a: 1
b: 2
c: 3
d: 4
e: >4
```

Peer Instruction Answer 2

```
#insert <stdio.h>
void main(); {
  int *p, x=5, y; // init
  y = *(p = &x) + 1;
  int z;
  flip-sign(p);
  printf("x=%d,y=%d,p=%d\n",x,y,*p);
}
flip-sign(int *n){*n = -(*n);}
```

How many syntax + logic errors in this C code?

```
#Errors
a: 1
b: 2
c: 3
d: 4
e: >4 (6!)
```


Pointers

- Pointers are used to point to any kind of data (`int`, `char`, a `struct`, etc.)
- Normally a pointer only points to one type (`int`, `char`, a `struct`, etc.).
  - `void *` is a type that can point to anything (generic pointer)
  - Use sparingly to help avoid program bugs, and security issues, and other bad things!

Pointers and Structures

```
typedef struct {
    int x;
    int y;
} Point;

Point p1;
Point p2;
Point* paddr;
```

```
/* dot notation */
int h = p1.x;
p2.y = p1.y;

/* arrow notation
   these lines are equivalent */
int h = (*paddr).x;
int h = paddr->x;
```


Pointers Summary

- Why use pointers?
  - If we want to pass a large struct or array, it's easier / faster / etc. to pass a pointer than the whole thing
  - In general, pointers allow cleaner, more compact code
- So what are the drawbacks?
  - Pointers are probably the single largest source of bugs in C, so be careful anytime you deal with them
    - Most problematic with dynamic memory management—which you will to know by the end of the semester, but not for the projects (there will be a lab later in the semester)
    - *Dangling references* and *memory leaks*

Agenda

- C and Pointer review
- Arrays
- Administrivia
- Pointer Arithmetic
- Break
- Pointer Misc
- Pointer Problems
- Summary

Arrays (1/5)

- Declaration:
  `int ar[2];`
  declares a 2-element integer array: just a block of memory

  `int ar[] = {795, 635};`
  declares and initializes a 2-element integer array
- Accessing elements:
  `ar[num]`
  returns the numth element

Arrays (2/5)

- Arrays are (almost) identical to pointers
  - `char *string` and `char string[]` are nearly identical declarations
  - Differ in subtle ways: incrementing, declaration of filled arrays
- *Key Concept*: Array variable is a "pointer" to the first (0th) element

Arrays (3/5)

- Consequences:
  - `ar` is an array variable, but looks like a pointer
  - `ar[0]` is the same as `*ar`
  - `ar[2]` is the same as `*(ar+2)`
  - We can use pointer arithmetic to conveniently access arrays
- An array variable is read-only
  - Cannot say "`ar = [anything]`"
- Declared arrays are only allocated while the scope is valid

```
char *foo() {
   char string[32]; ...;
   return string;
}
```

is incorrect ***and very very bad***

Arrays (4/5)

- Array size *n*; want to access from *0* to *n-1*, so you should use counter AND utilize a variable for declaration & incrementation
  - Bad pattern

```
int i, ar[10];
for(i = 0; i < 10; i++){ ... }
```

  - Better pattern

```
int ARRAY_SIZE = 10
int i, a[ARRAY_SIZE];
for(i = 0; i < ARRAY_SIZE; i++){ ... }
```

- SINGLE SOURCE OF TRUTH
  - You're utilizing indirection and avoiding maintaining two copies of the number 10

Arrays (5/5)

- Pitfall: An array in C does not know its own length, and its bounds are not checked!
  - Consequence: We can accidentally access off the end of an array
  - Consequence: We must pass the array *and its size* to any procedure that is going to manipulate it
- Segmentation faults and bus errors:
  - These are VERY difficult to find; be careful! (You'll learn how to debug these in lab)

Array Summary

- Array indexing is syntactic sugar for pointers
- `a[i]` is treated as `*(a+i)`
- E.g., three equivalent ways to zero an array:
  - `for (i=0; i < size; i++) a[i] = 0;`
  - `for (i=0; i < size; i++) *(a+i) = 0;`
  - `for (p=a; p < a+size; p++) *p = 0;`

C Strings

- String in C is just an array of characters

```
char string[] = "abc";
```

- How do you tell how long a string is?
  - Last character is followed by a 0 byte (aka "null terminator")

```
int strlen(char s[])
{
    int n = 0;
    while (s[n] != 0) n++;
    return n;
}
```

C String Standard Functions #include <string.h>

- `int strlen(char *string);`
  - Compute the length of string
- `int strcmp(char *str1, char *str2);`
  - Return 0 if `str1` and `str2` are identical (how is this different from `str1 == str2`?)
- `char *strcpy(char *dst, char *src);`
  - Copy contents of string `src` to the memory at `dst`. Caller must ensure that `dst` has enough memory to hold the data to be copied
  - Note: `dst = src` only copies pointers, not string itself

Agenda

- C and Pointer review
- Arrays
- Administrivia
- Pointer Arithmetic
- Break
- Pointer Misc
- Pointer Problems
- Summary

Administrivia

- Give your consent forms to your TA in discussion or lab.
- HW 1 has been posted – get started if you haven't already.
- Lab 2 has been posted.

Agenda

- C and Pointer review
- Arrays
- Administrivia
- Pointer Arithmetic
- Break
- Pointer Misc
- Pointer Problems
- Summary

Arrays as Arguments

Passing arrays:

- An array is passed to a function as a pointer
  - The array size is lost!

Really `int *array`

Must explicitly pass the size

```
int
foo(int array[],
    unsigned int size)
{
   … array[size - 1] …
}

int
main(void)
{
   int a[10], b[5];
   … foo(a, 10)… foo(b, 5) …
}
```


Arrays as Arguments

```
int
foo(int array[],
    unsigned int size)
{
   …
   printf("%d\n", sizeof(array));
}

int
main(void)
{
   int a[10], b[5];
   … foo(a, 10)… foo(b, 5) …
   printf("%d\n", sizeof(a));
}
```

What does this print? **8**

… because `array` is really a pointer (and a pointer is architecture dependent, but likely to be 8 on modern machines!)

What does this print? **40**

Pointer Arithmetic

pointer + number, pointer – number

E.g., *pointer* + 1 adds 1 something to a pointer

(in both examples, pretend variable **a** sits at address 100)

```
char   *p;
char    a;

p = &a;
```

```
int   *p;
int    a;

p = &a;
```

What does the following line yield?

```
printf("%u %u\n",p,p+1);
```

100 101

Adds `1*sizeof(char)` to the memory address

100 104

Adds `1*sizeof(int)` to the memory address

Pointer arithmetic should be used cautiously

Pointer Arithmetic

- Since a pointer is just a memory address, we can add to it to step through an array
- `p+1` correctly computes a ptr to the next array element automatically depending on `sizeof(type)`
- What if we have an array of large structs (objects)?
  - C takes care of it in the same way it handles basic types.

Pointer Arithmetic

- What is valid pointer arithmetic?
  - Add an integer to a pointer
  - Subtract 2 pointers (in the same array)
  - Compare pointers (<, <=, ==, !=, >, >=)
  - Compare pointer to NULL (indicates that the pointer points to nothing)
- Everything else is illegal since it makes no sense:
  - Adding two pointers
  - Multiplying pointers
  - Subtract pointer from integer

Pointer Arithmetic to Copy Memory

- We can use pointer arithmetic to "walk" through memory:

```
void copy(int *from, int *to, int n)
    {
     int i;
     for (i=0; i<n; i++) {
         *to++ = *from++;
    }
}
```

- Note we had to pass size (`n`) to `copy`

Peer Instruction

```
int main(void){
   int A[] = {5,10};
   int *p = A;

   printf("%u %d %d %d\n", p, *p, A[0], A[1]);
   p =  p + 1;
   printf("%u %d %d %d\n", p, *p, A[0], A[1]);
   *p = *p + 1;
   printf("%u %d %d %d\n", p, *p, A[0], A[1]);
}
```

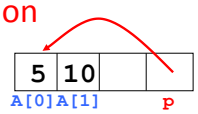

- If the first printf outputs 100 5 5 10, what will the next two printf output?
  a) 101 10 5 10 then 101 11 5 11
  b) 104 10 5 10 then 104 11 5 11
  c) 101 <other> 5 10 then 101 <3-others>
  d) 104 <other> 5 10 then 104 <3-others>
  e) One of the two printfs causes an ERROR

Peer Instruction

```
int main(void){
   int A[] = {5,10};
   int *p = A;

   printf("%u %d %d %d\n", p, *p, A[0], A[1]);
   p =  p + 1;
   printf("%u %d %d %d\n", p, *p, A[0], A[1]);
   *p = *p + 1;
   printf("%u %d %d %d\n", p, *p, A[0], A[1]);
}
```

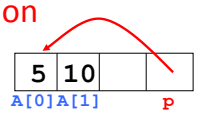

- If the first printf outputs 100 5 5 10, what will the next two printf output?
  a) 101 10 5 10 then 101 11 5 11
  b) 104 10 5 10 then 104 11 5 11
  c) 101 <other> 5 10 then 101 <3-others>
  d) 104 <other> 5 10 then 104 <3-others>
  e) One of the two printfs causes an ERROR

Pointer Arithmetic: Peer Instruction Question

How many of the following are invalid?

I. pointer + integer
II. integer + pointer
III. pointer + pointer
IV. pointer – integer
V. integer – pointer
VI. pointer – pointer
VII. compare pointer to pointer
VIII. compare pointer to integer
IX. compare pointer to 0
X. compare pointer to NULL

```
#invalid
a: 1
b: 2
c: 3
d: 4
e: 5
```


Pointer Arithmetic Peer Instruction Answer

How many of the following are invalid?

I.	pointer + integer	ptr + 1
II.	integer + pointer	1 + ptr
III.	pointer + pointer	ptr + ptr
IV.	pointer – integer	ptr - 1
V.	integer – pointer	1 - ptr
VI.	pointer – pointer	ptr - ptr
VII.	compare pointer to pointer	ptr1 == ptr2
VIII.	compare pointer to integer	ptr == 1
IX.	compare pointer to 0	ptr == NULL
X.	compare pointer to NULL	ptr == NULL

```
#invalid
a: 1
b: 2
c: 3
d: 4
e: 5
```


Agenda

- C and Pointer review
- Arrays
- Administrivia
- Pointer Arithmetic
- Break
- Pointer Misc
- Pointer Problems
- Summary

Agenda

- C and Pointer review
- Arrays
- Administrivia
- Pointer Arithmetic
- Break
- Pointer Misc
- Pointer Problems
- Summary

Pointers & Allocation (1/2)

- After declaring a pointer:
  - `int *ptr;`
- `ptr` doesn't actually point to anything yet (points somewhere, but don't know where). We can either:
  - Make it point to something that already exists, *or*
  - Allocate room in memory for something new that it will point to …

Pointers & Allocation (2/2)

- Option 1: Pointing to something that already exists:
  - `int *ptr, var1, var2; var1 = 5;`
    `ptr = &var1; var2 = *ptr;`
  - `var1` and `var2` have space implicitly allocated for them

- Option 2: Allocate room in memory for new thing to point to. See next lecture.

Arrays (one element past array *must* be valid)

- Array size `n`; want to access from 0 to n-1, but test for exit by comparing to address one element past the array

```
int ar[10], *p, *q, sum = 0;
...
p = &ar[0]; q = &ar[10];
while (p != q)
    /* sum = sum + *p; p = p + 1; */
    sum += *p++;
```

Is this legal?

- C defines that one element past end of array must be a valid address, i.e., will not cause an bus error or address error

Pointers and Functions (1/4)

- Sometimes you want to have a procedure increment a variable …
- What gets printed?

```
void AddOne(int  x)            y = 5
{     x =  x + 1;    }

int y = 5;
AddOne(y);
printf("y = %d\n", y);
```


Pointers and Functions (2/4)

- Solved by passing in a *pointer* to our subroutine.
- Now what gets printed?

```
void AddOne(int *p)            y = 6
{    *p = *p + 1;    }

int y = 5;
AddOne(&y);
printf("y = %d\n", y);
```


Pointers and Functions (3/4)

- But what if the thing you want changed is a *pointer*?
- What gets printed?

```
void IncrementPtr(int  *p)      *q = 50
{    p =  p + 1;    }

int A[3] = {50, 60, 70};
int *q = A;
IncrementPtr(q);
printf("*q = %d\n", *q);
```

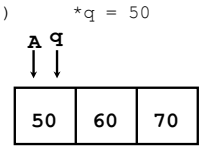

Pointers and Functions (4/4)

- Solution! Pass a *pointer to a pointer*, declared as `**h`
- Now what gets printed?

```
void IncrementPtr(int **h)      *q = 60
{    *h = *h + 1;    }

int A[3] = {50, 60, 70};
int *q = A;
IncrementPtr(&q);
printf("*q = %d\n", *q);
```

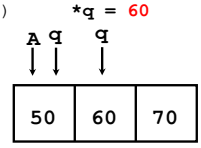

Agenda

- C and Pointer review
- Arrays
- Administrivia
- Pointer Arithmetic
- Break
- Pointer Misc
- Pointer Problems
- Summary

Segmentation Fault vs. Bus Error

- http://www.hyperdictionary.com/
- Bus Error
  - A fatal failure in the execution of a machine language instruction resulting from the processor detecting an anomalous condition on its bus. Such conditions include invalid address alignment (accessing a multi-byte number at an odd address), accessing a physical address that does not correspond to any device, or some other device-specific hardware error. A bus error triggers a processor-level exception which Unix translates into a "SIGBUS" signal which, if not caught, will terminate the current process.
- Segmentation Fault
  - An error in which a running Unix program attempts to access memory not allocated to it and terminates with a segmentation violation error and usually a core dump.

C Pointer Dangers

- Unlike Java, C lets you cast a value of any type to any other type without performing any checking

```
int x = 1000;
int *p = x;          /* invalid */
int *q = (int *) x; /* valid */
```

- First pointer declaration is invalid since the types do not match
- Second declaration is valid C but is almost certainly wrong
  - Is it ever correct?

C String Problems

- Common mistake is to forget to allocate an extra byte for the null terminator
- More generally, C requires the programmer to manage memory manually (unlike Java or C++)
  - When creating a long string by concatenating several smaller strings, the programmer must insure there is enough space to store the full string!
  - What if you don't know ahead of time how big your string will be?
  - Buffer overrun security holes!

More Common C Errors

- Difference between assignment and equality

  `a = b` is assignment

  `a == b` is an equality test
- One of the most common errors for beginning C programmers!
  - One pattern (when comparing with constant) is to put the var on the right!
    If you happen to use =, it won't compile!
    - `if (3 == a) { ...`

And in Conclusion, …

- Pointers and array variables are very similar.
  - Can use pointer or array syntax to index into arrays.
- Strings are (null terminated) arrays of characters
- Adding 1 to a pointer moves the pointer by the size of the thing it's pointing to.
- Pointers are the source of many bugs in C, so handle with care