LAB REPORT V2

Lab Session:

Name 1: SID:

Name 2: SID:

---

1. Tutorial

Download the MultiSim tutorial from the EE100 website and follow it through Section 6. Studying the additional material is optional. You may complete this tutorial at home (follow the directions online) or in lab.

2. Component characteristics.

Use MultiSim to produce a plot of the I/V characteristics of a diode (symbol 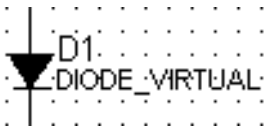

) for V = 0 … 1V. Use logarithmic spacing for the current (right click the axis in the MultiSim plot window to set logarithmic spacing).

Suggestion: use a voltage source in series with the diode as an "ampere meter" and plot its branch current.

Use your plot to determine by what amount the voltage across the diode must be increased to increase the current from 10μA to 100μA?

Simulated Value: _____ mV ___ of 10 **M**

It turns out that this value (usually referred to by the term "subthreshold slope") has great importance for the power dissipation of electronic circuits: it tells how well circuits can be turned off to conserve power. The value obtained above from simulation is characteristic for transistors used today. Finding new types of devices for which this value is lower is an area of intense research and opportunity for great fame and wealth!

3. Node voltage analysis

Calculate the value of voltage V_x using node voltage analysis in the circuit below and use MultiSim to verify your result.

Calculated value for V_x: _____ V ___ of 20 **P**

Simulated value for V_x: _____ V ___ of 10 **M**

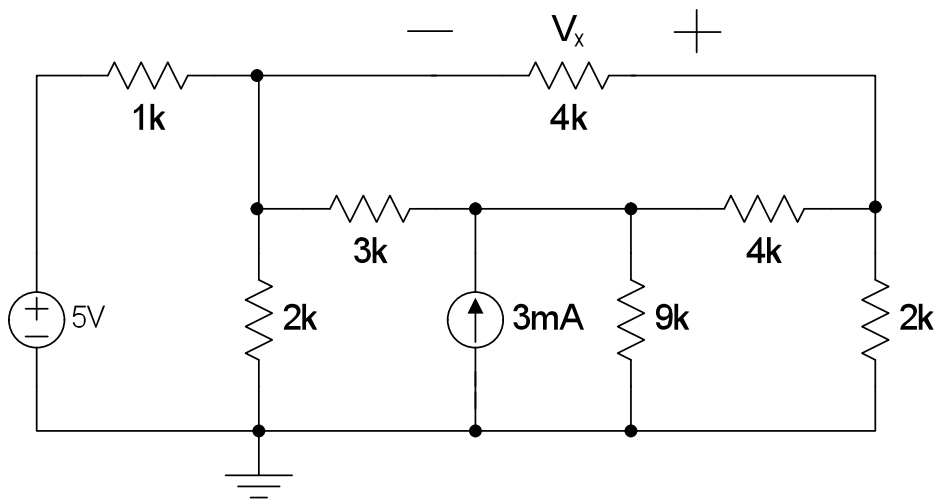

SUGGESTIONS AND FEEDBACK

Time for completing prelab:

Time for completing lab:

Please explain difficulties you had and suggestions for improving this laboratory. Be specific, e.g. refer to paragraphs or figures in the write-up. Explain what experiments should be added, modified (how?), or dropped.

PRELAB SUMMARY

Lab Session:

Name 1: SID:

Summarize your prelab (P) results here and turn this in at the BEGINNING of the lab session.

Show the algebraic equations you found using node voltage analysis (KCL and/or KVL). You may use a calculator to solve the system of equations.

Problem	Result	
2	V	___ of 20 **P**