EECS 100
Spring Semester 2003
Homework 8

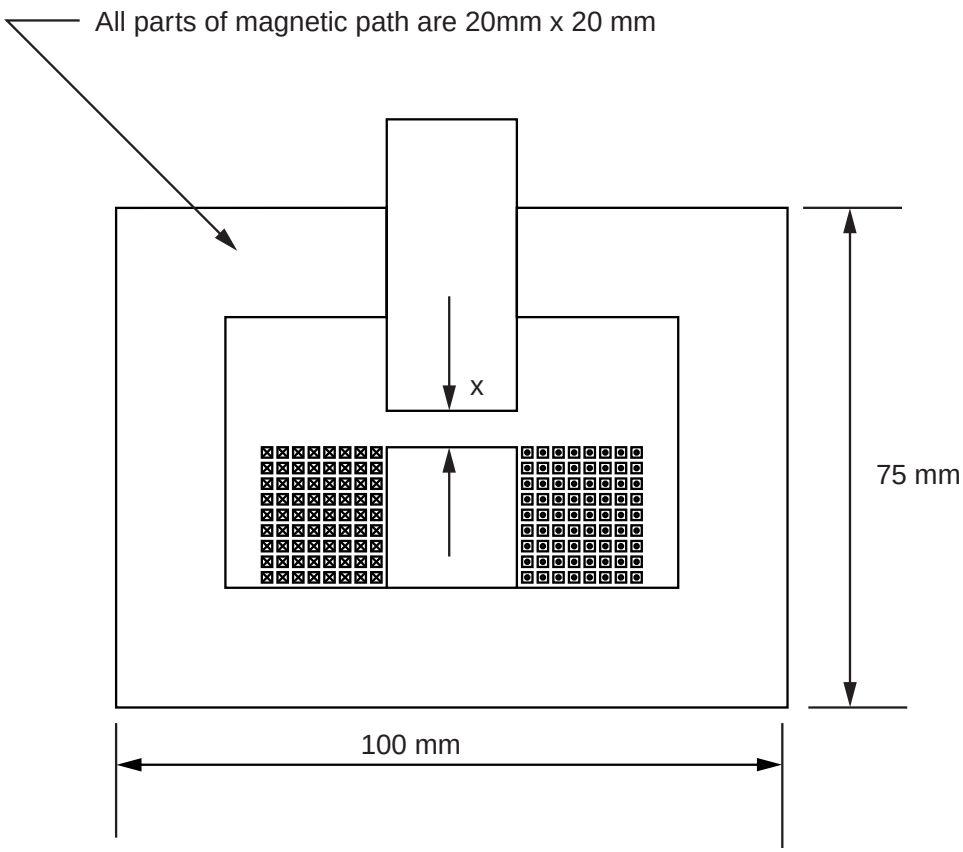

1. The above figure shows a solenoid-type variable reluctance transducer. The gap $\boldsymbol{x}$ may vary from 5.0 mm (open) to 0 mm (closed). The coil consists of 72 turns with 1.0 ampere driving current. The magnetic material has a relative permeability of 1500.

   (a) Find the magnetic flux in the solenoid with $\boldsymbol{x} = \mathbf{0}$.

(b) Find the magnetic field in the iron pole inside the coil with $\boldsymbol{x = 0}$. Is it saturated?

(c) Write down an expression for the reluctance as a function of $\boldsymbol{x}$. Convert this expression into an expression for the inductance as a function of $\boldsymbol{x}$.

(d) Using $\boldsymbol{F = (I^2/2)\dfrac{dL}{dx}}$, find the force on the plunger at $\boldsymbol{x = 0}$ and $\boldsymbol{x = 5}$ mm.

2. The JBL 2226H low frequency transducer has a 4.0 inch diameter voice coil. The magnetic field in the gap is 1.3 T and there are 46 turns in the magnetic gap.

   (a) Find the force produced by the loudspeaker when 1.0 ampere is applied to the voice coil.

   (b) If the mass of the cone is 98 grams, find the maximum amplitude of the cone's vibration at 400 Hz with 1.0 ARMS applied to the voice coil. Ignore friction and the restoring force of the suspension (i. e $\boldsymbol{\gamma = k = 0}$).

   (c) Find the displacement of the cone with 1.0 ampere DC applied, if $\boldsymbol{k = 6.19 \times 10^3}$ nt m^{-1}.

3. A series-connected DC motor for BART has an applied voltage of 1000 VDC and has $\boldsymbol{R_A = 0.25\ \Omega}$, $\boldsymbol{R_F = 0.5\ \Omega}$, and has $\boldsymbol{k_1 = 30}$ nt-m Wb^{-1}A^{-1} and $\boldsymbol{k_2 = 0.08}$ Wb A^{-1}.

   (a) Find the starting torque, in nt-m.

   (b) Plot the torque vs. efficiency characteristic for the motor.

   (c) Plot the efficiency (mechanical output power/electrical power) for the motor.

   (d) At what speed (in rpm) is the motor's efficiency the greatest?

   (e) What is the motor's mechanical output power horsepower at this speed? (1 hp=746 mechanical watts).

4. A three-phase induction motor has a four-pole rotor and runs on 208 VRMS (line voltage) 60Hz power. The motor runs at three percent slip and the characteristics are: $\boldsymbol{R' = 0.8\Omega}$, $\boldsymbol{X' = 0.8\Omega}$, $\boldsymbol{R'' = 0.6\Omega}$. The windings are $\boldsymbol{\Delta}$ connected.

   (a) Find the motor's speed, in rpm.

   (b) Find the total mechanical power produced in horsepower

   (c) Find the torque in SI units (nt-m).

   (d) Find the torque at start-up ($\boldsymbol{s = 1}$) for the motor.

   (e) Find the ratio of mechanical power to apparent power drawn by the motor.

5. A three-phase synchronous machine is run as a generator. The overall load is 1100 MVA and has a phase angle $\boldsymbol{\theta}$ of fifteen degrees, lagging. The machine runs at a power angle $\boldsymbol{\delta}$ of thirty degrees. The machine runs at 3600 rpm. The stator circuits are wye-connected and have a phase voltage (voltage of each phase to ground) of 3600 VRMS, 60 Hz.

   (a) Draw a phasor diagram with the phasors $\boldsymbol{v}$, $\boldsymbol{e}$, and $\boldsymbol{X_s\ I}$ shown. Show the angles $\boldsymbol{\delta}$ and $\boldsymbol{\theta}$.

   (b) Find the reactance in each phase, $\boldsymbol{X_s}$.

   (c) Find the excitation voltage $\mathbf{e}$. Give magnitude and phase.

   (d) Find the number of poles $\boldsymbol{p}$.

   (e) Find the current $\mathbf{I}$ in each phase.